Freelance 800F
AC 800F
Data Sheet

Atten：Smiling
Mobile/WhatsApp:+86 18050035902
E-mail: info@htechplc.com



Control^{IT} is the evolution of control systems into Industrial^{IT}:

Hardware and software components seamlessly integrate process-oriented information into true open applications, improving process control using worldwide-accepted industry standards. Scalable and platform independent products show the evolution path into the IT environment by enhancing your installation.

Description

AC 800F opens up the flexibility of Fieldbus technology to the user. The AC 800F collects and processes diagnostic and process data from four Fieldbus lines, which may be of different types. It does this in addition to the tasks of a “conventional” process station.

The AC 800F is available in two versions:

- 4 MB static RAM, 4 MB EPROM
- 16 MB synchronous dynamic RAM, 8 MB EPROM

Up to 4 (different) fieldbus modules can be plugged into the AC 800F. The communication with other controllers runs via Ethernet.

The AC 800F optionally provides several levels of redundancy:

- device redundancy with 2 AC 800F
- power supply redundancy (24 V DC)
- Ethernet communication redundancy (standard)
- Cable redundancy for Profibus DP, requires external equipment (RLM01)

The data protection is made via battery back-up by Ethernet or battery modules with appropriate functionality.

Features

- Process Station with integrated fieldbus capability
- 4 high-speed fieldbus lines
- Supports different fieldbus types, even simultaneously:
  PROFIBUS-DP, up to 12 MBd
  Modbus
  CAN
  Foundation Fieldbus H1 (with LD800 HSE)
- Easy engineering:
  fully integrated in Control Builder F
- One unified database for field devices shared by the control level and the Human System Interface (HSI)
- Module recognition with factory and operational parameters
- Comprehensive diagnostics for proactive maintenance
- Compact, rugged design
- Front panel connectors
- DIN Rail (C-rail) or wall mounting for easy installation
- Ambient temperature 0-60 °C (32-140 °F) with temperature monitoring
- EMC certification according to EN50082
- Certification:
  CE, NAMUR, CSA, UL, EN61000-6-2.

June 2006

Gross Automation, 1725 South Johnson Road, New Berlin, WI 53146, www.ssacsales.com, 800-349-5827

AC 800F Controller Redundancy

Controller redundancy can be achieved by installing two AC 800F. To ensure quick and smooth takeover by the secondary AC 800F in case the primary AC 800F fails, a dedicated redundancy communications link through the second Ethernet module makes sure that both AC 800F are always synchronized. All inputs and outputs are designed to support redundant operation.

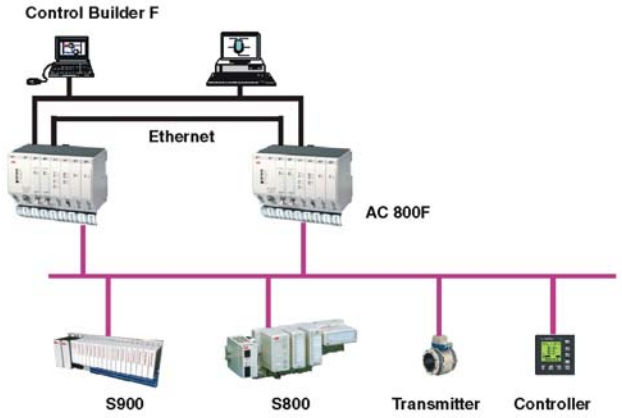

Profibus Line Redundancy

Using the Redundancy Link Module RLM 01 will do the conversion of one simple, non-redundant Profibus line into two reciprocally redundant lines.
You can position the Redundancy Link Module RLM 01 directly after a Profibus module (master), before a bus segment with several slaves or before an individual slave. PROFIBUS stations with redundant couplers can be directly connected to the PROFIBUS set redundant by RLM 01. Stations with only one interface can be optionally assigned to the one or other line.
For technical description dates of the Redundancy Link Module RLM 01 see document 3BDD011600R0201.

An alternative solution to the Profibus line redundancy is to use a Fiber Optic Ring, for example with the OZD Profi 12M module from firm Hirschmann

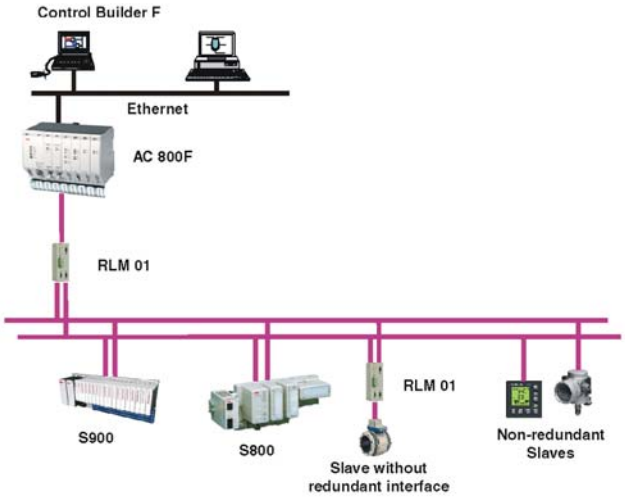

AC800F Redundancy together with Profibus Line Redundancy

You can achieve both; controller redundancy and Profibus line redundancy by using two AC 800F with one RLM01 each. This topology combines the advantages of controller redundancy with the one of line redundancy as described in the above paragraphs.

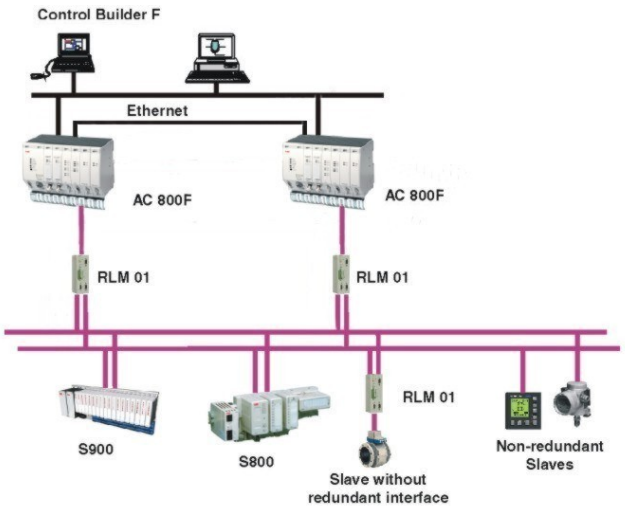

Gross Automation, 1725 South Johnson Road, New Berlin, WI 53146, www.ssacsales.com, 800-349-5827

Compatibility

The table describes the correlation between the software versions and the AC 800F modules in consideration of the basic units PM 803F (16 MB) / PM 802F (4 MB) and the functionality of the established modules.

Hardeware			PM 802F	PM 803F	
Software Control Builder F			V6.1, 6.2	V7.1, 7.2, 8.1	
Established modules	SA 801F	115/230 V AC	yes	yes	max. 3 Profibus modules FI 830F are supported
	SD 802F	24 V DC	yes	yes	max. 3 Profibus modules FI 830F are supported
	EI 801F	10Base2	yes	yes	yes, without battery buffering
	EI 802F	AUI	yes	yes	yes, without battery buffering
	EI 803F	10BaseT	yes	yes	yes, without battery buffering
	FI 810F	CAN-3	yes	yes	yes
	FI 820F	Serial	yes	yes	yes
	FI 830F	Profibus	yes	yes	yes
	AM 801F	Battery Backup	yes	yes	no
New modules	SA 811F	115/230 V AC	no	yes	yes
	SD 812F	24 V DC	no	yes	yes
	EI 811F	10Base2	no	yes	yes *
	EI 812F	AUI	no	yes	yes *
	EI 813F	10BaseT	no	yes	yes *
	FI 840F	FF/HSE	no	yes	yes
	AM 811F	Battery Backup	no	yes	yes *

*) Battery buffering only with EI/AM HW-Index ≥ 2.00 and PM 803F Step2 (3BDH000530R1)

Gross Automation, 1725 South Johnson Road, New Berlin, WI 53146, www.ssacsales.com, 800-349-5827

Basic Unit PM 802F /PM 803F

Features

- ☐ Super Scalar RISC microprocessor (up to 150 MIPS)
- ☐ 16 K internal CPU cache RAM
- ☐ RAM memory with error detection and correction
  PM 802F: 4 MB static
  PM 803F: 16 MB synchronous dynamic
- ☐ Flash-EPROM
  PM 802F: 4 MB, 32-bit words
  PM 803F: 8 MB, 32- bit words
- ☐ EEPROM, serial, 16 Kbit
- ☐ Monitoring of the temperature inside the device
- ☐ Watchdog
- ☐ 4 slots for fieldbus modules
- ☐ 2 slots for Ethernet communications modules, 32-bit data bus, 100 MBytes/s
- ☐ Battery backup incl. battery watchdog

Description

The basic unit, PM 802F and respectively PM803F, cyclically scans signals from the fieldbus sensors via the corresponding fieldbus modules, processes these signals according the application programs installed by the user and sends appropriate signals to the fieldbus actuators via the fieldbus modules.

Controller redundancy can be achieved by installing two AC 800F. To ensure quick and smooth takeover by the secondary AC 800F in case the primary AC 800F fails, a dedicated redundancy communications link through the second Ethernet module makes sure that both AC 800F are always synchronized. All inputs and outputs are designed to support redundant operation.

Data communication between AC 800F, process and operator stations runs over the Ethernet system bus on the first Ethernet module. Data exchange with the engineering station is also carried via the system bus. Engineering station communications can involve new or updated configuration files being downloaded to the process stations, or information about the connected modules being reported back. When fieldbus modules are installed or exchanged, the required configuration information is automatically updated.

Configuration and real-time process data is stored in RAM. To safeguard this data in case of power loss, the RAM power is backed up with batteries located either on the Ethernet modules or on battery modules.

The PM 803F has more memory than the PM 802F and is therefor capable to handle larger projects. Due to increased memory size and different technology the buffering times were reduced.

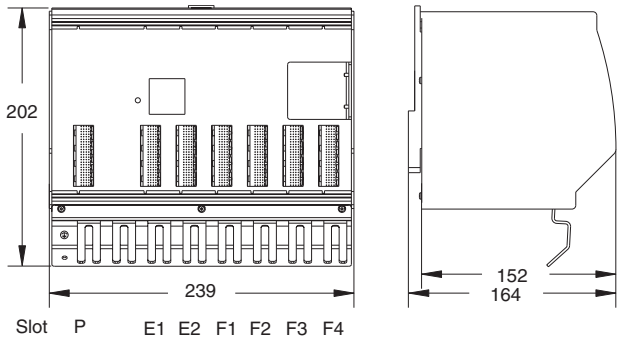

Technical Data

CPU	Intel 80960HT25/75 32-bit RISC Super Scalar processor up to 150 MIPS
RAM	PM802F: 4 MB static read/write memory battery back up PM 803F 16 Mbytes synchronous dynamic read/write memory, battery back up
I/O scan cycle time	Selectable by configuration. Depends on the capabilities of the fieldbus module
Processing time for 1000 instructions	< 1.0 ms for binary and 16 bit arithmetic instructions < 2 ms for fixed point arithmetic instructions < 1.5 ms for 32 bit arithmetic instructions

Power consumption:

Basic unit only:	PM 802F	PM 803F
	max. 6.3 W	max. 7.8 W
	depending on CPU usage and cycle time	

Power supply	PM 802F	PM 803F
115 - 230 V AC	SA 801F	SA 811F
2 x 24 V DC	SD 802F	SD 812F

Max. power output	see power supply modules
Weight	1.6 kg max. 5 kg (fully assembled)
Dimensions	Width 239 mm, 9.4 inches Height 202 mm, 8 inches Depth 164 mm, 6.5 inches

Gross Automation, 1725 South Johnson Road, New Berlin, WI 53146, www.ssacsales.com, 800-349-5827

Features

- ☐ Input voltage 115 - 230 VAC (self adjusting), output is electrically isolated
- ☐ Power supply outputs provide:
  SA 801 F: 5 V DC / 5 A and 3.3 V DC / 5 A
  SA 811 F: 5 V DC / 5.5 A and 3.3 V DC / 6.5 A
- ☐ Enhanced power-fail prediction and shutdown procedures
- ☐ LED indication for power supply status and operating status of the AC 800F
- ☐ Short circuit proof, current limited
- ☐ 20 ms backup energy for use in the event of primary power failure, according to NAMUR

Description

The AC 800F modules are supplied with 5 V DC / 5 A and 3.3 V DC / 5 A auxiliary power by the SA 801F or 5 V DC / 5.5 A and 3.3 V DC / 6.5 A by the SA 811F power supply. The power supply has open-circuit, overload and sustained short-circuit protection. The electronically controlled output voltage provides high stability and low residual ripple.

In case of power loss ≥5 ms, the power supply module generates a power-fail signal. This signal is used by the CPU module to shut down operations and enter to a safe state. This is required for a controlled restart of the system and the user application when power is restored. The output voltage remains within its tolerance limits for at least another 15 ms. Altogether a mains voltage drop of 20 ms will be managed.



Fig. SA 801F

LED Displays

Power

Green	Internal supply voltage is available

Failure

Off	Normal status
Orange	Self test
Flashing orange	Overtemperature occurred during operation
Red	Hardware failure of the basic unit
Flashing red	Software failure of the system

Run/Stop

Green	Processing active
Flashing green	Process was stopped and is now started again
Red	Processing inactive
Flashing red	Process was active and is stopped now
Orange	Self test
Off	Software initialization

Prim/Sec	In case of redundancy please see the LED's meaning in manual "Mounting and Installation Instruction". For not redundancy the states are:
Orange	Self test
Off	Normal status

Operator Controls

Run/Stop switch	Connected to LED
Toggle Prim/Sec	For redundancy. Toggles between primary and secondary AC 800F (operational on primary AC 800F only, and only if a secondary AC 800F is available)
Reset	Reset button press and hold > 4 s for coldstart

Front Panel Connections

Power supply
One connector for 115 - 230 VAC input

Diag	For diagnostics and optional radio-controlled clock 9-pin male connector

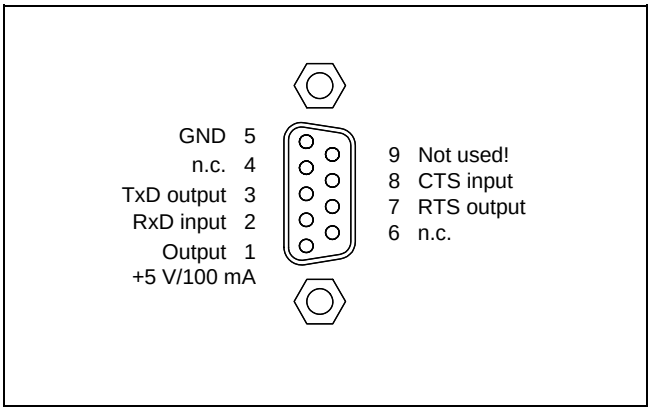

Pin-assignment diagnostic interface DIAG on SA 801F, SA 811F

Gross Automation, 1725 South Johnson Road, New Berlin, WI 53146, www.ssacsales.com, 800-349-5827

Technical Data SA 801F

Input voltage	Alternating current 115 - 230 VAC Permissible range 90 - 260 V AC Frequency: 50 - 60 Hz (47 - 63 Hz)
Input current at nominal load	230 V AC: 210 mA 115 V AC: 411 mA
Rated input power	48 VA
Backup energy for the event of power failure	> 20 ms
Fuse	Subminiature fuse 2.5 AT, soldered
Output voltage	3.3 V DC (± 3%) typical 5 V DC (± 3%) typical
Output current	0.5 - 5 A to 3.3V and 5.0 V
Current limit	approx. 6 A Automatic return to normal operation after short circuit
Total output power	max. 26.5 W
Weight	0.460 kg

Technical Data SA 811F

Input voltage	Alternating current 115 - 230 VAC Permissible range 90 - 260 V AC Frequency: 50 - 60 Hz (47 - 63 Hz)
Input current at nominal load	230 V AC: 275 mA 115 V AC: 541 mA
Rated input power	63 VA
Backup energy for the event of power failure	> 20 ms
Fuse	Subminiature fuse 2.5 AT, soldered
Output voltage	3.3 V DC (± 3%) typical 5 V DC (± 3%) typical
Output current	0.5 - 6.5 A to 3.3 V 0.5 - 5.5 A to 5.0 V
Current limit	approx. 7.5 A Automatic return to normal operation after short circuit
Total output power	max. 35 W
Weight	0.460 kg

Gross Automation, 1725 South Johnson Road, New Berlin, WI 53146, www.ssacsales.com, 800-349-5827

Features

- ☐ Redundant input voltage 24 V DC, provides operation in accordance with NAMUR
- ☐ Power supply outputs provide:
  SD 802F: 5 V DC / 5 A and 3.3 V DC / 5 A
  SD 812F: 5 V DC / 5.5 A and 3.3 V DC / 6.5 A
- ☐ Enhanced power-fail prediction and shutdown procedures
- ☐ LED indication for power supply status and operating status of the AC 800F
- ☐ Short circuit proof, current limited
- ☐ 20 ms backup energy for use in the event of primary power failure, according to NAMUR

Description

The AC 800F modules are supplied with 5 V DC / 5 A and 3.3 V DC / 5 A auxiliary power by the SD 802F power supply module, resp. with 5 V DC / 5.5 A and 3.3 V DC / 6.5 A by the SD 812F. The power supply has open-circuit, overload and sustained short-circuit protection. The electronically controlled output voltage provides high stability and low residual ripple.

In case of power loss ≥ 5 ms, the power supply module generates a power-fail signal. This signal is used by the CPU module to shut down operations and enter to a safe state. This is required for a controlled restart of the system and the user application when power is restored. The output voltage remains within its tolerance limits for at least another 15 ms. Altogether an input voltage drop of 20 ms will be managed.

LED Displays

Power	
Green	Internal supply voltage is available
Failure	
Off	Normal status
Orange	Self test
Flashing orange	Overtemperature occurred during operation
Red	Hardware failure of the basic unit
Flashing red	Software failure of the system
Run/Stop	
Green	Processing active
Flashing green	Process was stopped and is now started again
Red	Processing inactive
Flashing red	Process was active and is stopped now
Orange	Self test
Off	Software initialization
Prim/Sec	In case of redundancy please see the LED's meaning in manual "Mounting and Installation Instruction". For not redundancy the states are:
Orange	Self test
Off	Normal status



Fig. SD 802F

Operator Controls

Run/Stop switch	Connected to LED
Toggle Prim/Sec	For redundancy. Toggles between primary and secondary AC 800F (operational on primary AC 800F only, and only if a secondary AC 800F is available)
Reset	Reset button press and hold > 4 s for coldstart

Front Panel Connections

Power supply	Two connectors for 24 V DC, automatic input selection when used with single power supply
Diag	For diagnostics and optional radio-controlled clock 9-pin male connector

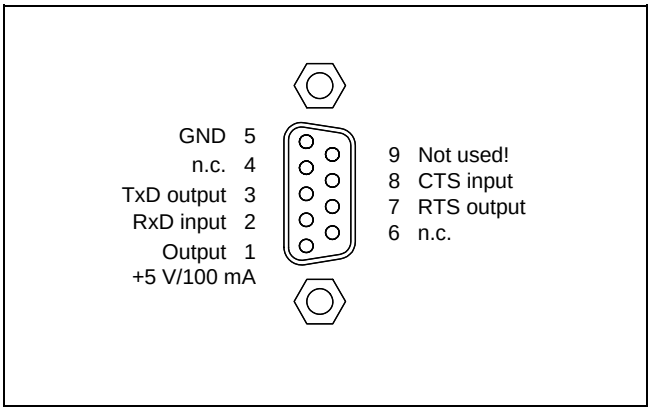

Pin-assignment diagnostic interface DIAG on SD 802F, SD 812F

Gross Automation, 1725 South Johnson Road, New Berlin, WI 53146, www.ssacsales.com, 800-349-5827

Power Supply SD 802F / SD 812F

Technical Data SD 802F

Input voltage	2 x direct current 24 V DC permissible range 19.2 - 32.5 V DC
Input current at nominal load	1.3 A at 24 V DC
Rated input power	31 W
Backup energy for the event of power failure	> 20 ms
Fuse	For each supply: subminiature fuse 3.15 AT, soldered
Output voltage	3.3 V DC (± 3%) typical 5 V DC (± 3%) typical
Output current	0.5 - 5 A
Current limit	approx. 6 A Automatic return to normal operation after short circuit
Total output power	max. 26.5 W
Weight	0.460 kg

Technical Data SD 812F

Input voltage	2 x direct current 24 V DC permissible range 19.2 - 32.5 V DC
Input current at nominal load	1.7 A at 24 V DC
Rated input power	41 W
Backup energy for the event of power failure	> 20 ms
Fuse	For each supply: subminiature fuse 3.15 AT, soldered
Output voltage	3.3 V DC (± 3%) typical 5 V DC (± 3%) typical
Output current	0.5 - 6.5 A to 3.3 V 0.5 - 5.5 A to 5.0 V
Current limit	approx. 7.5 A Automatic return to normal operation after short circuit
Total output power	max. 35 W
Weight	0.460 kg

Gross Automation, 1725 South Johnson Road, New Berlin, WI 53146, www.ssacsales.com, 800-349-5827

Ethernet Modules EI 801F

Features

- ☐ IEEE802.3 Ethernet standard
- ☐ Provides 10Base2 compliant communication
- ☐ 32-bit data bus
- ☐ Transmission rate 10 MBit/s
- ☐ Direct memory access to main memory, < 4% CPU overhead for operation
- ☐ Optional battery for redundant battery backup of main memory

Description

These communication modules provide Ethernet communications to the system bus compliant with IEEE802.3 standard.

Communications module, compliant with 10Base2 (Cheapernet) for thin coax cable installations.

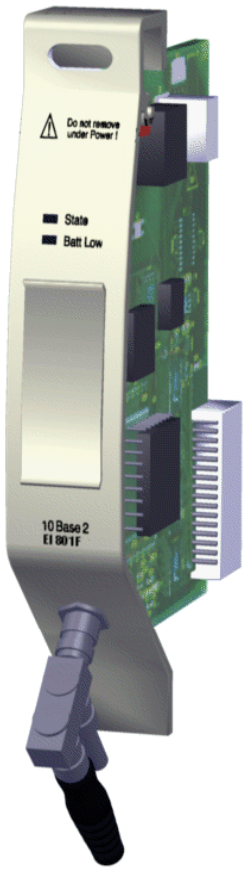

LED Displays

State

Off	No supply voltage, module is isolated
Green	Power supply on, module identified and ready to operate as configured.
Orange	Power supply on, module identified and either: — normal transitory state after module startup — configuration mode of Boot Loader
Orange flashing	Power supply on, module identified; module not connected to proper bus structure.
Red	Power supply on and either: — module not yet identified (normal for short time during module startup) — error occurred during module test

Batt. Low

Off	Sufficient buffer battery voltage.
Orange	Buffer battery not found or low (insufficient voltage).

Front Panel Connections

Coax connector

Technical Data

Rated voltage	3.3 V / 5 V, ±3%, from CPU board
Power consumption	max. 2.8 W
Thin Ethernet	10Base2

RAM and real-time-clock buffering time

	PM 802F	PM 803F
New battery inserted	≥ 1,5 years	without buffering
After “Low” warning	≥ 10 days	

Battery	3.6 V lithium battery, 950 mAh (not in the delivery)
Weight	approx. 0.150 kg (without battery)

Gross Automation, 1725 South Johnson Road, New Berlin, WI 53146, www.ssacsales.com, 800-349-5827

Features

- ☐ IEEE802.3 Ethernet standard
- ☐ Provides 10Base5 compliant communication via AUI
- ☐ 32-bit data bus
- ☐ Transmission rate 10 MBit/s
- ☐ Direct memory access to main memory, < 4% CPU overhead for operation
- ☐ Optional battery for redundant battery backup of main memory

Description

These communication modules provide Ethernet communications to the system bus compliant with IEEE802.3 standard.

Communications module, to connect a commercial transceiver with AUI connector (15-pin female plug DIN 41652).

LED Displays

State

Off	No supply voltage, module is isolated
Green	Power supply on, module identified and ready to operate as configured.
Orange	Power supply on, module identified and either: — normal transitory state after module startup — configuration mode of Boot Loader
Orange flashing	Power supply on, module identified; module not connected to proper bus structure.
Red	Power supply on and either: — module not yet identified (normal for short time during module startup) — error occurred during module test

Batt. Low

Off	Sufficient buffer battery voltage.
Orange	Buffer battery not found or low (insufficient voltage).

Front Panel Connections

15-pin SUB-D socket with slide lock for AUI interface

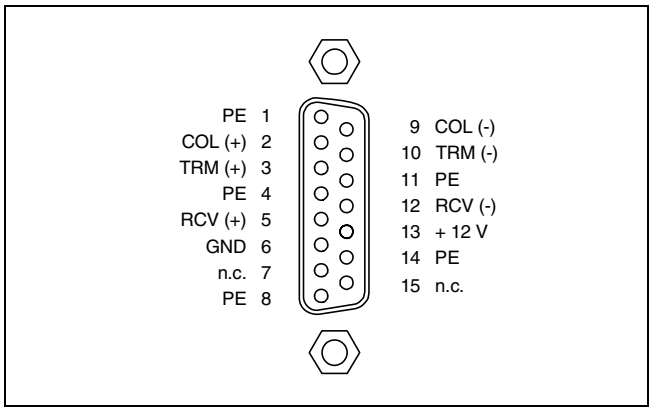

Pin-assignment Ethernet Module EI 802F



Technical Data

Rated voltage	3.3 V / 5 V, ±3%, from CPU board
Power consumption	max. 6.2 W (3 W + PIN Transceiver)
Full Ethernet	10Base5 via AUI/10Base5 transceiver and AUI connection
Fiber optic cable	10BaseFL via AUI/FO transceiver and AUI connection
Transceiver feeding	
Rated voltage	12 V, ± 5%
Current requirement	typ. 250 mA

RAM and real-time-clock buffering time

	PM 802F	PM 803F
New battery inserted	≥ 1,5 years	without buffering
After “Low” warning	≥ 10 days	

Battery	3.6 V lithium battery, 950 mAh (not in the delivery)
Weight	approx. 0.150 kg (without battery)

Gross Automation, 1725 South Johnson Road, New Berlin, WI 53146, www.ssacsales.com, 800-349-5827

Ethernet Module EI 803F

Features

- ☐ IEEE802.3 Ethernet standard
- ☐ provides 10BaseT compliant communication (10MBit)
- ☐ 32-bit data bus
- ☐ Transmission rate 10 MBit/s
- ☐ Direct memory access to main memory, < 4% CPU overhead for operation
- ☐ Optional battery for redundant battery backup of main memory

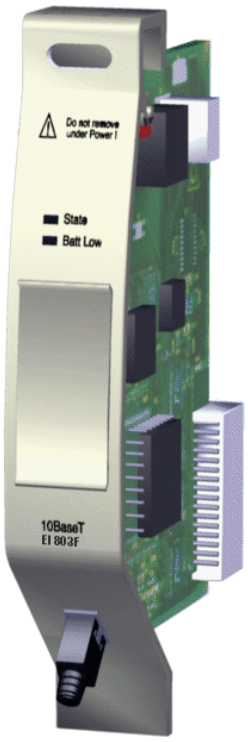

Description

These communication modules provide Ethernet communications to the system bus compliant with IEEE802.3 standard.

Communications module, compliant with 10BaseT shielded Twisted Pair (STP, cable category 3, 4 or 5 advanced)

LED Displays

State

Off	No supply voltage, module is isolated
Green	Power supply on, module identified and ready to operate as configured.
Orange	Power supply on, module identified and either: — normal transitory state after module startup — configuration mode of Boot Loader
Orange flashing	Power supply on, module identified; module not connected to proper bus structure.
Red	Power supply on and either: — module not yet identified (normal for short time during module startup) — error occurred during module test

Batt. Low

Off	Sufficient buffer battery voltage.
Orange	Buffer battery not found or low (insufficient voltage).

Front Panel Connections

RJ-45 female connector (shielded).There are two integrated LEDs indicating the current communication status. The LEDs are not labeled but can be identified by their color. The upper yellow LED indicates the link state, the lower green LED indicates active communication.

LED 10BaseT link

off	No active link. No communication possible.
static yellow	Active link. Communication possible.

LED 10BaseT active

off	No communication.
flashing green	Active communication.

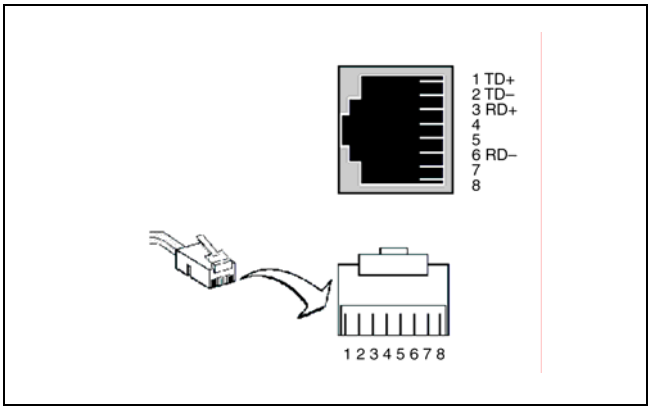

Pin-assignment Ethernet module EI 803F

Technical Data

Rated voltage	3.3 V / 5 V, ±3%, from CPU board
Power consumption	max. 1.8 W
STP	10BaseT cable category 3, 4 or 5 advanced

RAM and real-time-clock buffering time

	PM 802F	PM 803F
New battery inserted	≥ 1,5 years	without buffering
After “Low” warning	≥ 10 days	

Battery	3.6 V lithium battery, 950 mAh (not in the delivery)
Weight	approx. 0.150 kg (without battery)

Gross Automation, 1725 South Johnson Road, New Berlin, WI 53146, www.ssacsales.com, 800-349-5827

Ethernet Modules EI 811F

Features

- ☐ IEEE802.3 Ethernet standard
- ☐ Provides 10Base2 compliant communication
- ☐ 32-bit data bus
- ☐ Transmission rate 10 MBit/s
- ☐ Direct memory access to main memory, < 4% CPU overhead for operation
- ☐ Optional battery for redundant battery backup of main memory

Description

These communication modules provide Ethernet communications to the system bus compliant with IEEE802.3 standard.

Communications module, compliant with 10Base2 (Cheapernet) for thin coax cable installations.



LED Displays

State

Off	No supply voltage, module is isolated
Green	Power supply on, module identified and ready to operate as configured.
Orange	Power supply on, module identified and either: — normal transitory state after module startup — configuration mode of Boot Loader
Orange flashing	Power supply on, module identified; module not connected to proper bus structure.
Red	Power supply on and either: — module not yet identified (normal for short time during module startup) — error occurred during module test

Battery (PM803F)

Off	AC 800F is active, EI 811F not active =>buffering from power supply module AC 800F is off (no watchdog of the batteries voltage) =>buffering from battery.
Orange	During battery recovery or start-up phase
Red	Warning: battery low, no battery inserted, insufficient electrical contact etc.
Green	battery inserted and data protection provided.

Battery (PM802F)

Off	Sufficient buffer battery voltage
Orange	Buffer battery not found or low (insufficient voltage).

Front Panel Connections

Coax connector

Technical Data

Rated voltage	3.3 V / 5 V, ±3%, from CPU board
Power consumption	max. 2.0 W
Thin Ethernet	10Base2

RAM and real-time-clock buffering time

	PM 803F	PM 802F
New battery inserted	≥ 10 days	≥ 1,5 years
After “Low” warning	≥ 5 hours	≥ 10 days

Battery	3.6 V lithium battery, 950 mAh (not in the delivery)
Weight	approx. 0.150 kg (without battery)

Gross Automation, 1725 South Johnson Road, New Berlin, WI 53146, www.ssacsales.com, 800-349-5827

Features

- ☐ IEEE802.3 Ethernet standard
- ☐ Provides 10Base5 compliant communication via AUI
- ☐ 32-bit data bus
- ☐ Transmission rate 10 MBit/s
- ☐ Direct memory access to main memory, < 4% CPU overhead for operation
- ☐ Optional battery for redundant battery backup of main memory

Description

These communication modules provide Ethernet communications to the system bus compliant with IEEE802.3 standard.

Communications module, to connect a commercial transceiver with AUI connector (15-pin female plug DIN 41652).

LED Displays

State

Off	No supply voltage, module is isolated
Green	Power supply on, module identified and ready to operate as configured.
Orange	Power supply on, module identified and either: — normal transitory state after module startup — configuration mode of Boot Loader
Orange flashing	Power supply on, module identified; module not connected to proper bus structure.
Red	Power supply on and either: — module not yet identified (normal for short time during module startup) — error occurred during module test

Battery (PM803F)

Off	AC 800F is active, EI 812F not active =>buffering from power supply module AC 800F is off (no watchdog of the batteries voltage) =>buffering from battery.
Orange	During battery recovery or start-up phase
Red	Warning: battery low, no battery inserted, insufficient electrical contact etc.
Green	battery inserted and data protection provided.

Battery (PM802F)

Off	Sufficient buffer battery voltage
Orange	Buffer battery not found or low (insufficient voltage).

Front Panel Connections

15-pin SUB-D socket with slide lock for AUI interface



Technical Data

Rated voltage	3.3 V / 5 V, ±3%, from CPU board
Power consumption	max. 4.9 W (2.3 W + P_{IN} Transceiver)
Full Ethernet	10Base5 via AUI/10Base5 transceiver and AUI connection
Fiber optic cable	10BaseFL via AUI/FO transceiver and AUI connection
Transceiver feeding	
Rated voltage	12 V, ± 5%
Current requirement	typ. 250 mA

RAM and real-time-clock buffering time

	PM 803F	PM 802F
New battery inserted	≥ 10 days	≥ 1,5 years
After “Low” warning	≥ 5 hours	≥ 10 days

Battery	3.6 V lithium battery, 950 mAh (not in the delivery)
Weight	approx. 0.150 kg (without battery)

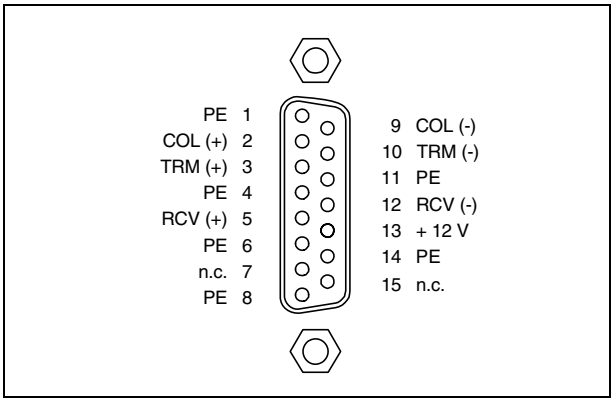

Pin-assignment Ethernet Module EI 812F

Gross Automation, 1725 South Johnson Road, New Berlin, WI 53146, www.ssacsales.com, 800-349-5827

Ethernet Module EI 813F

Features

- ☐ IEEE802.3 Ethernet standard
- ☐ provides 10BaseT compliant communication (10MBit)
- ☐ 32-bit data bus
- ☐ Transmission rate 10 MBit/s
- ☐ Direct memory access to main memory, < 4% CPU overhead for operation
- ☐ Optional battery for redundant battery backup of main memory

Description

These communication modules provide Ethernet communications to the system bus compliant with IEEE802.3 standard.

Communications module, compliant with 10BaseT shielded Twisted Pair (STP, cable category 3, 4 or 5 advanced)



LED Displays

State

Off	No supply voltage, module is isolated
Green	Power supply on, module identified and ready to operate as configured.
Orange	Power supply on, module identified and either: — normal transitory state after module startup — configuration mode of Boot Loader
Orange flashing	Power supply on, module identified; module not connected to proper bus structure.
Red	Power supply on and either: — module not yet identified (normal for short time during module startup) — error occurred during module test

Battery (PM803F)

Off	AC 800F is active, EI 813F not active =>buffering from power supply module AC 800F is off (no watchdog of the batteries voltage) =>buffering from battery.
Orange	During battery recovery or start-up phase
Red	Warning: battery low, no battery inserted, insufficient electrical contact etc.
Green	battery inserted and data protection provided.

Battery (PM802F)

Off	Sufficient buffer battery voltage
Orange	Buffer battery not found or low (insufficient voltage).

Technical Data

Rated voltage	3.3 V / 5 V, ±3%, from CPU board
Power consumption	max. 1.2 W
STP	10BaseT cable category 3, 4 or 5 advanced

RAM and real-time-clock buffering time

	PM 803F	PM 802F
New battery inserted	≥ 10 days	≥ 1,5 years
After “Low” warning	≥ 5 hours	≥ 10 days

Battery	3.6 V lithium battery, 950 mAh (not in the delivery)
Weight	approx. 0.150 kg (without battery)

Front Panel Connections

RJ-45 female connector (shielded). There are two integrated LED’s indicating the current communication status. The LEDs are not labeled but can be identified by their color. The upper yellow LED indicates the link state; the lower green LED indicates active communication.

LED 10BaseT link

off	No active link. No communication possible.
static yellow	Active link. Communication possible.

LED 10BaseT active

off	No communication
flashing green	Active communication

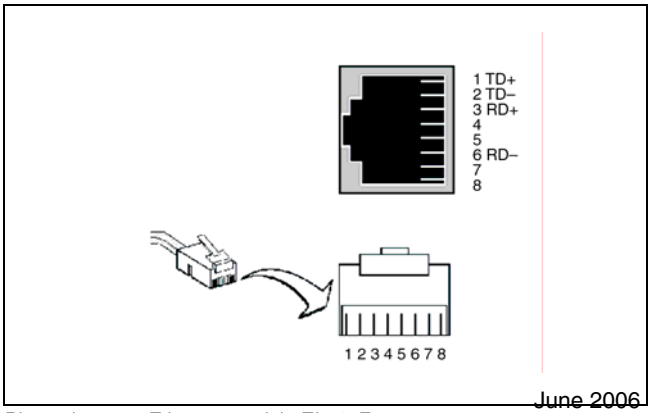

Pin-assignment Ethernet module EI 813F

Gross Automation, 1725 South Johnson Road, New Berlin, WI 53146, www.ssacsales.com, 800-349-5827

CAN-3 Module FI 810F

Features

- ☐ 3-channel CAN modules
- ☐ Transmission rate: up to1 MBd
- ☐ Module can be removed or inserted during operation
- ☐ Redundant operation, with redundant AC 800F

Description

The FI 810F module provides connectivity to the Freelance 2000 rack I/O. It provides functionality according CAN 2.0 specification and supports baud rates up 1 MBd. All interfaces are electrically isolated and support redundant operation in conjunction with a second AC 800F.
Only one FI 810F module may be connected per AC 800F. The slot of the FI 810F module is preset to F1.

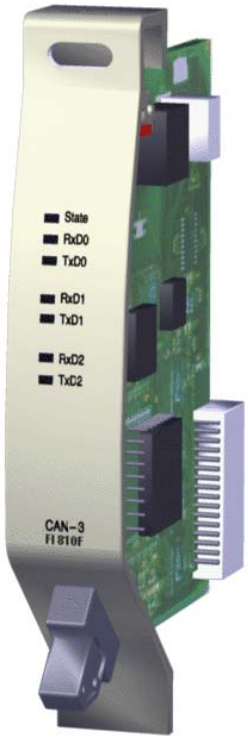

LED Displays

State

Off	No supply power, module is isolated
Green	Module is active and working properly
Orange	Module has been identified by AC 800F, but has not yet been activated
Red	Module powered up, but not yet identified, or an error has occurred

RxD0

Green	Receive data on channel 0

TxD0

Green	Transmit data on channel 0

RxD1

Green	Receive data on channel 1

TxD1

Green	Transmit data on channel 1

RxD2

Green	Receive data on channel 2

TxD2

Green	Transmit data on channel 2

Front Panel Connections

CAN 3	9-pin female connector

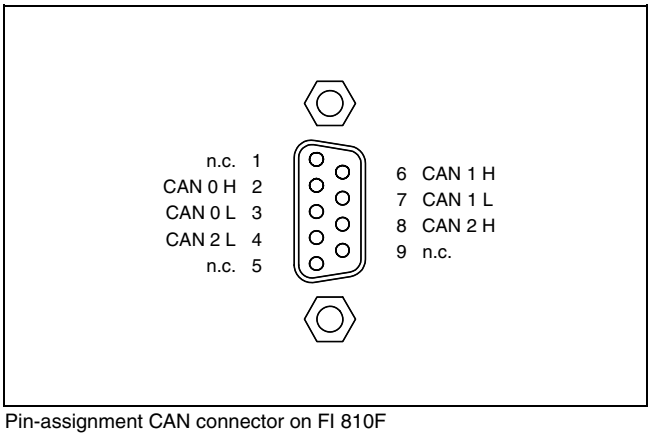

Pin-assignment CAN connector on FI 810F

Technical Data

Rated voltage	5 V, ± 3% from basic unit
Power consumption	1.6 W - 2.6 W, appending from communication
Channel supply:	
Raged voltage	5 V, ± 10%
Power consump. per channel	0.15 W, when idling 0.30 W, during communication
Weight	approx. 0.145 kg

Gross Automation, 1725 South Johnson Road, New Berlin, WI 53146, www.ssacsales.com, 800-349-5827

Serial Module FI 820F

Features

- ☐ Provides 2 serial interfaces
- ☐ Transmission rates up to 38.4 KBaud configurable
- ☐ Physical interfaces RS485, RS422, RS232 selectable
- ☐ Electrical isolation
- ☐ Module can be removed or inserted during operation
- ☐ Redundant operation, with redundant AC 800F

Description

The FI 820F module provides connectivity to a variety of serial fieldbuses and serial protocols. Standard protocol is MODBUS By using different connection cables the physical interface can easily be selected: RS485 (half duplex), RS422 (full duplex) or RS232. All interfaces are electrically isolated and support redundant operation in conjunction with a second AC 800F.

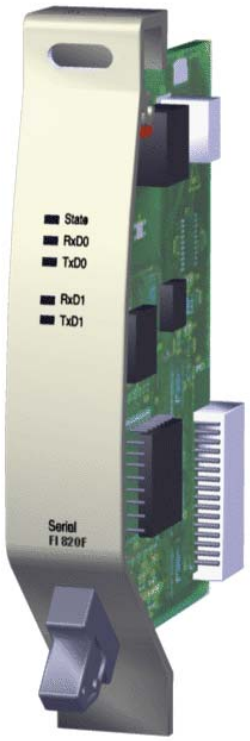

LED Displays

State

Off	No supply power, module is isolated
Green	Module is active and working properly
Orange	Module has been identified by AC 800F, but has not yet been activated
Red	Module powered up, but not yet identified, or an error has occurred

RxD0

Green	Receive data on channel 0

TxD0

Green	Transmit data on channel 0

RxD1

Green	Receive data on channel 1

TxD1

Green	Transmit data on channel 1

Technical Data

Rated voltage	5 V, ± 3% from basic unit
Power consumption	1.6 - 2.6 W, appending from communication
Channel supply:	
Raged voltage	5 V, ± 10%
Power consump. per channel	0.15 W, when idling 0.30 W, during communication
Output voltage for termination (Vcc_Term)	
Rated voltage	5 V, ± 10%
Max. output current	20 mA
Weight	approx. 0.145 kg

Front Panel Connections

Serial 26-pin female connector

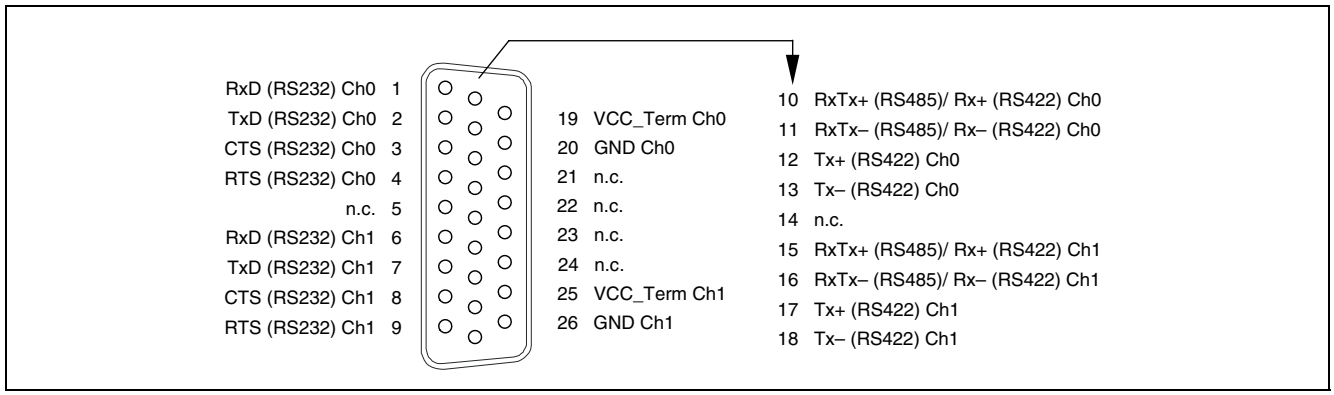

Pin assignment serial connector on FI 820F

Gross Automation, 1725 South Johnson Road, New Berlin, WI 53146, www.ssacsales.com, 800-349-5827

Profibus Module FI 830F

Features

- ☐ PROFIBUS-DP Module (DIN 19245)
- ☐ Transmission rate up 12 MBd
- ☐ supports up to 126 slaves
- ☐ Physical interface: RS485
- ☐ Electrical isolation
- ☐ Shared memory (256 KB) onboard, to minimize the use of basic unit memory.
- ☐ Module can be removed or inserted during operation
- ☐ Redundant operation, with redundant AC 800F



Description

The FI 830F module interfaces to the Profibus fieldbus. It provides functionality according to the PROFIBUS-DP V1 standard (DIN 19245 amendment 1) and supports baud rates up 12 MBd. The module is the master on the Profibus line and allows connecting up to 126 Profibus slaves. Configuration and parameterization is carried out completely with Control Builder F — no additional external configuration tools are required.

Line redundancy can be achieved using an external device (RLM 01) which drives two Profibus lines in parallel. In conjunction with a second AC 800F the module can also operate in a redundant-master mode without limiting any other feature.

LED Displays

State

Off	No supply power, module is isolated
Green	Module is active and working properly
Orange	Module has been identified by AC 800F, but has not yet been activated
Red	Module powered up, but not yet identified, or an error has occurred

Busy

Off	Module is in passive state on the Profibus.
Green	Module has token and, thus, is acting as the master

Front Panel Connections

Profibus 9-pin female connector (DIN 41652)

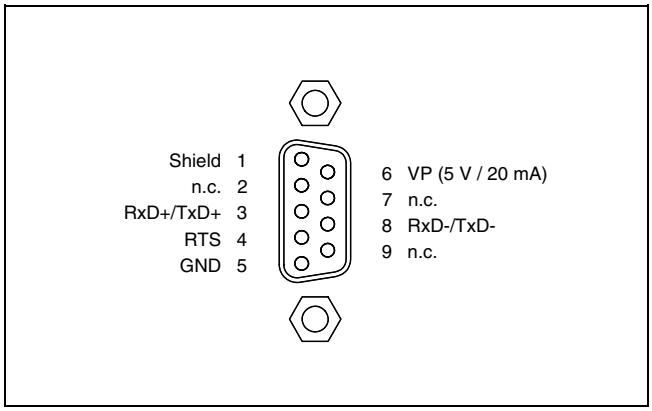

Pin-assignment Profibus connector on FI 830F

Technical Data

Power consumption	In the active state, depends on the communication cycle time: 2.8 W
Max. output current	20 mA for bus termination/repeater supply
Output voltage	5 V, ± 5%
Overvoltage protection	+7.5 V / -5 V either transmission line to GND.
Weight	approx. 0.150 kg

Gross Automation, 1725 South Johnson Road, New Berlin, WI 53146, www.ssacsales.com, 800-349-5827

Features

- ☐ ARM-CPU with integrated Ethernet controller, 32-bit data bus, 32-bit address bus
- ☐ Flash EPROM for module CPU and protocol software.
- ☐ Software/firmware update without EPROM exchange.
- ☐ Separate memory for module CPU.
- ☐ Shared memory for data exchange between main processor and module CPU. Data protection by parity check.
- ☐ Automatic detection if 10BaseT or 100BaseTX is connected.
- ☐ Electrical isolation for TP interface
- ☐ ESD protector on RJ45 socket
- ☐ Serial interface/Manchester encoder for generating a serial bit stream
- ☐ EEPROM for configuration data and diagnostic data memory independent from battery buffering.
- ☐ Isolator for electrical isolation of the bus signals
- ☐ RJ45 connector with two link LEDs.

Description

The FI 840F is a high speed ethernet fieldbus module designed for fast data exchange in production engineering with decentralized peripherals.
The FF/HSE module FI 840F is a Fieldbus-Foundation®-(FF)-Master. Using the Control Builder F it is possible to configure diverse Fieldbus Foundation®-devices.

The FF/HSE module FI 840F is designed to connect the AC 800F to a FF/HSE network. It can be mounted on slots F1 ... F4. It is used if high transmission rates are required or shall be made available for future use. FF/HSE wiring is always a point-to-point connection. Therefor a networks with more than two nodes always requires network switches or hubs.

LED Displays

State

off	No voltage applied, module is separated.
green	Power on, module is identified and ready for operation according to the configuration
orange	Power on, module has been identified by AC 800F, - intermediate state during start-up - configuration mode of the boot loader
flashing orange	Power on, module has been identified by AC 800F. Module is not connected to corrected bus physics
red	Power on - Module not yet identified (on a short-term basis during start up) - an error has occurred during module test

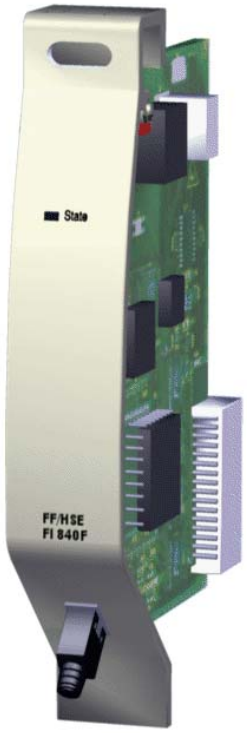

Front Panel Connections

RJ-45 female connector (shielded). There are two integrated LEDs indicating the current communication status. The LEDs are not labeled but can be identified by their color. The upper yellow LED indicates the transmission rate, the lower green LED indicates the communication state.

LED FF/HSE Speed

off	Module has detected 10 MBit/s data connection.
static yellow	Module has detected 100 MBit/s data connection.

LED FF/HSE Link

off	No active link, neither 10Mbit nor 100 MBit. No communication possible.
static green	Active link. Communication possible. No data transfer.
flashing green	Active link. Communication possible.

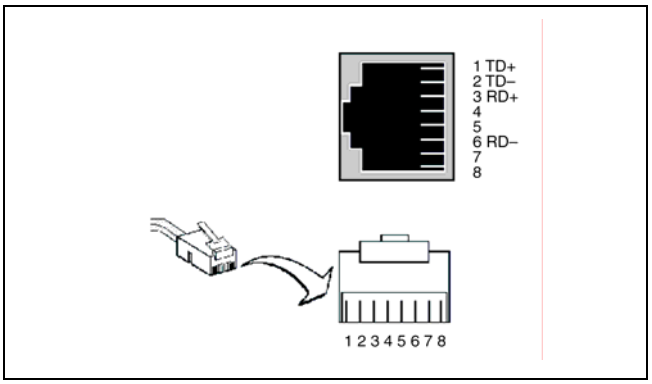

Pin-assignment FF/HSE module FI 840F

Gross Automation, 1725 South Johnson Road, New Berlin, WI 53146, www.ssacsales.com, 800-349-5827

Technical Data

Rated voltage	5 V ± 3%, 3.3 V ± 3 % and 2.5 V ± 5 %
Power consumption in active state	1.4 W - 2.1 W depending on communications load
Module memory	8 MBytes synchronous dynamic RAM
Shared memory	1 MByte synchronous static RAM used for data exchange between CPU board and module.
Firmware memory	2 MByte Flash EPROM, 32-bit word length, capable of programming in the system and direct programming from AC 800F CPU board
EEPROM	Serial 16 kBit EEPROM, write cycles $\geq 10^7$, buffering time $\geq$ 10 years
Weight	approx. 0.150 kg

Static characteristics

Power consumption	max. 2.1 W
Medium	100BaseTx cable, category 5
Max. segment length	100 m
Max. number of nodes per segment	2

Dynamic characteristics

Transmission rate	10 Mbit/s or 100 Mbit/s

Gross Automation, 1725 South Johnson Road, New Berlin, WI 53146, www.ssacsales.com, 800-349-5827

Battery Module AM 801F

Features

- ☐ Provides battery backup for PM802F only
- ☐ Enables redundant battery energy backup on the AC 800F



Description

The battery module provides for retention of the AC 800F RAM data when the AC 800F is off or has no Ethernet module.
The battery module is used when the AC 800F is used as a stand-alone device, i.e. when it has no Ethernet connection, or when the only existing Ethernet module is to be replaced without the AC 800F loosing its configuration data.

LED Displays

State

Off	No supply power, module is isolated
Green	Power supply on, module identified and ready to operate as configured.
Orange	Power supply on, module identified and either: — normal transitory state after module startup — configuration mode of Boot Loader
Red	Module power supply is on and either: — module not yet identified (normal for short time, during module startup) — error occurred during module test

Batt Low

Off	Sufficient buffer battery voltage.
Orange	Buffer battery not found or low (insufficient voltage).

Technical Data

Rated voltage	3.3 V / 5 V, ±3%, from CPU board
Power consumption	approx. 0.25 W
Battery	3.6 V lithium battery, 950 mAh (included in delivery)
Low battery signaling	≤ 2.4 V

RAM and real-time-clock buffering time

New battery inserted	≥ 1,5 years
After “Low” warning	≥ 10 days

Weight	approx. 0.150 kg without buffer battery approx. 0.170 kg with buffer battery

Gross Automation, 1725 South Johnson Road, New Berlin, WI 53146, www.ssacsales.com, 800-349-5827

Battery Module AM 811F

Features

- ☐ Provides battery backup
- ☐ Enables redundant battery energy backup on the AC 800F

Description

The battery module provides for retention of the AC 800F RAM data when the AC 800F is off or has no Ethernet module.
The battery module is used when the AC 800F is used as a stand-alone device, i.e. when it has no Ethernet connection, or when the only existing Ethernet module is to be replaced without the AC 800F loosing its configuration data.



LED Displays

State

Off	No supply power, module is isolated
Green	Power supply on, module identified and ready to operate as configured.
Orange	Power supply on, module identified and either: — normal transitory state after module startup — configuration mode of Boot Loader
Red	Module power supply is on and either: — module not yet identified (normal for short time, during module startup) — error occurred during module test

Battery (PM803F)

Off	AC 800F is active, AM 811F not active =>buffering from power supply module AC 800F is off (no watchdog of the batteries voltage) =>buffering from battery.
Orange	During battery recovery or start-up phase
Red	Warning: battery low, no battery inserted, insufficient electrical contact etc.
Green	battery inserted and data protection provided.

Battery (PM802F)

Off	Sufficient buffer battery voltage
Orange	Buffer battery not found or low (insufficient voltage).

Technical Data

Rated voltage	3.3 V / 5 V, ±3%, from CPU board
Power consumption	approx. 0.28 W
Battery	3.6 V lithium battery, 950 mAh (included in delivery)
Low battery signaling	≤ 3.2 V

RAM and real-time-clock buffering time

	PM 803F	PM 802F
New battery inserted	≥ 10 days	≥ 1,5 years
After “Low” warning	≥ 5 hours	≥ 10 days

Weight	approx. 0.150 kg without buffer battery approx. 0.170 kg with buffer battery

Gross Automation, 1725 South Johnson Road, New Berlin, WI 53146, www.ssacsales.com, 800-349-5827

Environmental Conditions

Permissible ambient temperature	0 °C - 60 °C
Permissible module internal temperature	0 °C - 70 °C (temperature monitoring on basic unit)
Temperature gradient	In operation: 1 °C/min, according to DIN IEC 68, Part 14/EN 60068-2-14(11.99)
Transport and storage temperature	-25 °C - +85 °C
Permissible relative humidity	Non-condensing, ≤ 80 % annual average ≤ 95 % for 30 days per year maximum
Degree of humidity	RH-1, according to EN 61131-2: 1994 (IEC 1131-2)
Climatic category	KWF according to DIN 40040 (replaced by EN 60721-3-3 and EN 61709) 3K3 according to DIN IEC 721/EN 60721-3-3
Degree of protection	For basic unit with module complement: IP20

Electromagnetic Compatibility (EMC)

Complies with the protection requirements of EMI directive 89/336/EEC of May 1989 and EMVG of Nov. 1992.

Interference suppression	According to EN 55022 / 4.1988 DIN VDE 0878 Part 22 / 11.89, class B
Noise immunity	Basic standard: EN 50082, VDE 0839 - Part 82-2, EN 61000-6-2 Tested according to EN61000-4; VDE 0847 • Parts 1 to 6,8,11, Degree 3, are met with shielded communication cables • The industrial standard to NAMUR 21 / 8.98 is met

Electrical Protection

Safety class	II
Overvoltage category	II for all connectors, pollution degree 2
Designed according to	IEC 1010-1 (1990 - 09); EN 61010-1 / 3.94 or DIN/EN 61010 - Part 1 / 3.94 (VDE 0411 - Part 1), CSAC 22.2, No. 1010-1 and No. 213 (Class I, Div 2), SIQ (CB Scheme 97NK2421), CSA/NTRL.
Module supply power	Extra low voltage with protective separation from other circuits which may be grounded according to DIN VDE 0100, Part 410-1.97/IEC 60364-4-41/10.92
Power supply SA 801F, SA 811F	Safety isolating transformer according to DIN VDE 0551, Part 1 (9.95); EN 60742 Optocoupler for protective separation against electrical shock (German standard VDE 0884 / 8.87)
Power supply SD 802F, SD 812F	No elec. separation!

Shock and Vibration Data

Tested according to DIN IEC 68, Part 2-6, 2-27/EN 60068-2-6, 2-27 (11.99)

Transport

Shock	30 g/11 ms/ 3 times to each axis Max. values for the individual modules. The values are valid for correct mounted modules.

In operation

Vibration, 3x5 cycles	2 g/0.15 mm/5 - 150 Hz

Gross Automation, 1725 South Johnson Road, New Berlin, WI 53146, www.ssacsales.com, 800-349-5827

Power Dissipation for the Calculation of Cooling System

The following table lists the anticipated power dissipation (heat dissipation) of individual AC 800F modules.
The data for the modules contain the combined power consumption from internal and external supply sources. For detailed information see the **Mounting and Installation Instructions, AC 800F** manual.

Module		Max. Power Dissipation
Basic unit	PM 802F	
with power supply	SA 801F	20.8 W
with power supply	SD 802F	10.8 W
Basic unit	PM 803F	
with power supply	SA 811F	26.8 W
with power supply	SD 812F	13.8 W
Ethernet module	EI 801F	2.8 W
	EI 811F	2.0 W
Ethernet module	EI 802F	
Without transceiver supply		3.0 W
With transceiver supply		6.2 W
Ethernet module	EI 812F	
Without transceiver supply		2.3 W
With transceiver supply		4.9 W
Ethernet module	EI 803F	1.8 W
	EI 813F	1.2 W
CAN-module	FI 810F	2.6 W
Serial module	FI 820F	2.6 W
PROFIBUS module	FI 830F	2.8 W
FF/HSE module	FI 840F	2.1 W
Battery module	AM 801F	0.25 W
	AM 811F	0.28 W

Gross Automation, 1725 South Johnson Road, New Berlin, WI 53146, www.ssacsales.com, 800-349-5827



Gross Automation, 1725 South Johnson Road, New Berlin, WI 53146, www.ssacsales.com, 800-349-5827