ABB Drives

User's Manual
Ethernet Adapter Module
RETA-01

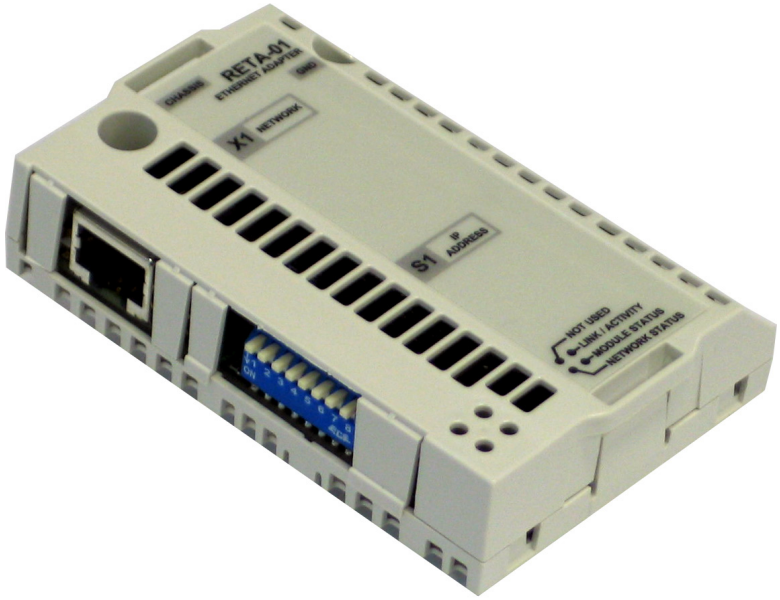

Attn：Smiling
Mobile/WhatsApp/Wechat:+86 18050035902
Email: info@htechplc.com

Ethernet Adapter Module
RETA-01

User's Manual

3AFE64539736 Rev D
EN
EFFECTIVE: 23.3.2007

© 2007 ABB Oy. All Rights Reserved.

Safety instructions

Overview

This chapter states the general safety instructions that must be followed when installing and operating the RETA-01 Ethernet Adapter module.

The material in this chapter must be studied before attempting any work on, or with, the unit.

In addition to the safety instructions given below, read the complete safety instructions of the specific drive you are working on.

General safety instructions



WARNING! All electrical installation and maintenance work on the drive should be carried out by qualified electricians.

The drive and adjoining equipment must be properly earthed.

Do not attempt any work on a powered drive. After switching off the mains, always allow the intermediate circuit capacitors 5 minutes to discharge before working on the frequency converter, the motor or the motor cable. It is good practice to check (with a voltage indicating instrument) that the drive is in fact discharged before beginning work.

The motor cable terminals of the drive are at a dangerously high voltage when mains power is applied, regardless of motor operation.

There can be dangerous voltages inside the drive from external control circuits even when the drive mains power is shut off. Exercise appropriate care when working on the unit. Neglecting these instructions can cause physical injury or death.

Table of Contents

Safety instructions 5

Overview 5
General safety instructions 5

Table of Contents 7

Introduction 11

Intended audience 11
Before you start 11
What this manual contains 11
Terms used in this manual 12
Product and service inquiries 14
Product training 14
Providing feedback on ABB Drives manuals 14

Overview 15

Overview 15
Modbus/TCP 15
EtherNet/IP 15
The RETA-01 Ethernet Adapter module 16
  Compatibility 17
  Delivery check 17
  Warranty and liability information 18

Quick start-up guide 19

Overview 19
Preliminary preparation 19
Mechanical installation 19
Electrical installation 19

Drive configuration 19
Network configuration 20
Communication 21
Modbus/TCP master configuration 21
Ethernet/IP master configuration 22

Mechanical installation 29

Mounting 29

Electrical installation 31

General cabling instructions 31
Ethernet connection 31

Drive configuration 33

Overview 33
RETA-01 configuration 33

Network configuration 41

Overview 41
Data transfer rates supported 44
Other network components 44

Communication profiles 45

The ODVA AC/DC drive profile 45
ODVA output attributes 46
ODVA input attributes 47
ABB Drives communication profile 49
The control word and the status word 49
References 50
Actual values 50

Communication 51

Overview 51
Protocols 51
Modbus/TCP 52
Overview 52
Register read and write 52
Register mapping 52
Exception codes 54
Function codes 54
EtherNet/IP 55
Overview 55
Introduction to Ethernet/IP 55
Object modelling and functional profiles 55
Assembly objects 55
Class objects 65
Identity Object, Class 0x01 65
Message Router, Class 0x02 69
Assembly Objects, Class 0x04 69
Connection Manager, Class 0x06 70
Motor Data Object, Class 0x28 71
Control Supervisor Object, Class 0x29 72
AC/DC-Drive Object, Class 0x2A 74
Vendor Specific Object, Class 0x90 76
Drive IO Map Object, Class 0x91 78
Configuration Object, Class 0x92 79
TCP/IP Interface Object, Class 0xF5 80
Ethernet Link Object, Class 0xF6 82

Fault tracing 83

LED indications 83

Technical data 85

RETA-01 85
Ethernet link 86

Introduction

Intended audience

The manual is intended for the people who are responsible for commissioning and using an RETA-01 Ethernet Adapter module. The reader is expected to have a basic knowledge of electrical fundamentals, electrical wiring practices and how to operate the drive.

Before you start

It is assumed that the drive is installed and ready to operate before starting the installation of the extension module.

In addition to conventional installation tools, have the drive manuals available during the installation as they contain important information not included in this manual. The drive manuals are referred to at various points of this document.

What this manual contains

This manual contains information on the wiring, configuration and use of the RETA-01 Ethernet Adapter module.

Safety instructions are featured in the first few pages of this manual.

Overview contains a short description of the Ethernet protocols and the RETA-01 Ethernet Adapter module, a delivery checklist, and information on the manufacturer’s warranty.

Quick start-up guide contains a short description of how to set up the RETA-01 Ethernet Adapter module.

Mechanical installation contains placing and mounting instructions for the module.

Electrical installation contains wiring, bus termination and earthing instructions.

Drive configuration contains a description of bus configuration and activation of the communication

Network configuration explains the different methods of setting up the network configuration.

Communication profiles describes AC/DC Drive profile and ABB Drives profile

Communication contains a description of how data is transmitted through the RETA-01 module.

Fault tracing explains how to trace faults with the status LEDs on the RETA-01 module.

Technical data contains information on physical dimensions, configurable settings and connectors of the module and the specification of the Ethernet link.

Terms used in this manual

Communication Module

Communication Module is a name for a device (e.g. a fieldbus adapter) through which the drive is connected to an external communication network (e.g. a fieldbus). The communication with the module is activated with a drive parameter.

MAC ID

Every node on Ethernet network has to have a unique identifier. This node number is called MAC ID (Media Access Control ID).

Data Sets and Data Words

Each data set consists of three 16-bit words, i.e. data words. The Control (or Command) Word and the Status Word, References and Actual Values (see chapter *Communication)* are types of data words; the contents of some data words are user-definable.

Input and Output

The terms "input" and "output" are defined from the network master's point of view. For example, drive's status words are considered as the input data and control words as the output data.

An input will produce data to the network and an output will consume data received from the network.

RETA-01 Ethernet Adapter module

The RETA-01 Ethernet Adapter module is one of the optional fieldbus adapter modules available for ABB drives. The RETA-01 is a device through which a drive is connected to an Ethernet network.

I/O Assembly selection

Smart network devices (such as the RETA-01) can produce and/or consume more than one I/O value. Typically, they will also produce and/or consume status and diagnostic information. Each piece of data communicated by a device is represented by an attribute in one of the device's internal objects. Communicating multiple pieces of data (attributes) across a single I/O connection requires that the attributes are grouped or assembled together into a single block.

Parameter

A parameter is an operating instruction for the drive. Parameters can be read and programmed with the drive control panel, or through the RETA-01 module.

Attribute

Attribute is a description of a characteristic or feature of an object, i.e. they contain information about the object. Typically, attributes provide status information or govern the operation of an object. Attributes are divided into class attributes and instance attributes.

Product and service inquiries

Address any inquiries about the product to your local ABB representative, quoting the type code and serial number of the unit in question. A listing of ABB sales, support and service contacts can be found by navigating to www.abb.com/drives and selecting *Drives – World wide service contacts* on the right pane.

Product training

For information on ABB product training, navigate to www.abb.com/drives and select *Drives – Training courses* on the right pane.

Providing feedback on ABB Drives manuals

Your comments on our manuals are welcome. Go to www.abb.com/drives, then select successively *Drives – Document Library – Manuals feedback form* on the right pane.

Overview

Overview

The RETA-01 Adapter module supports the Modbus/TCP and EtherNet/IP network protocols. This chapter contains a short description of the above protocols and the RETA-01 Adapter module, a delivery checklist and warranty information.

Modbus/TCP

Modbus/TCP is a variant of the Modbus family of simple, vendor-neutral communication protocols intended for supervision and control of automation equipment. Specifically, it covers the use of Modbus messaging in an Ethernet environment using the TCP/IP protocols.

The implementation of the Modbus/TCP server in the RETA-01 module is done according to the Modbus/TCP Specification 1.0. The supported Modbus commands are listed in chapter *Communication*.

The Modbus/TCP protocol allows the RETA-01 module to be used as an Ethernet bridge to control the drive. The RETA-01 module supports eight simultaneous IP connections.

Further information can be obtained from www.modbus.org.

EtherNet/IP

EtherNet/IP is based on the Common Industrial Protocol (CIP), which is also the framework for both the ControlNet and DeviceNet networks. EtherNet/IP uses standard Ethernet and TCP/IP technology to transport CIP communication packets. The module fulfills all requirements for certification as an Ethernet/IP device.

Further information can be obtained from www.odva.org.

The RETA-01 Ethernet Adapter module

The RETA-01 Ethernet Adapter module is an optional device for ABB drives which enables the connection of the drive to a Ethernet network. The drive is considered as a slave on the Ethernet network. Through the RETA-01 Ethernet Adapter module, it is possible to:

- give control commands to the drive (Start, Stop, Run enable, etc.)
- feed a motor speed or torque reference to the drive
- give a process actual value or a process reference to the PID controller of the drive
- read status information and actual values from the drive
- change drive parameter values
- reset a drive fault.

The Modbus/TCP and EtherNet/IP commands and services supported by the RETA-01 Ethernet Adapter module are discussed in chapter *Communication*. Please refer to the user documentation of the drive as to which commands are supported by the drive.

The adapter module is mounted into an option slot on the motor control board of the drive. See the *Hardware Manual* of the drive for module placement options.

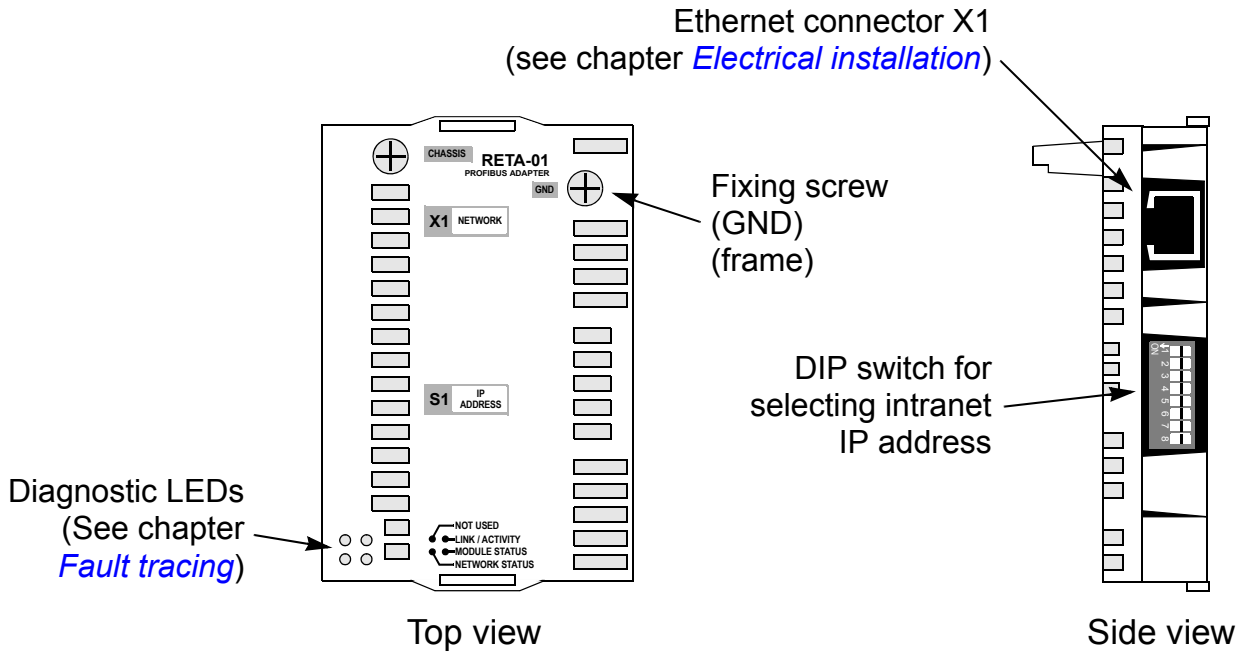

Figure 1. The RETA-01 Adapter module.

Compatibility

The RETA-01 is compatible with all master stations that support the Modbus/TCP and/or EtherNet/IP protocols.

Delivery check

The option package for the RETA-01 Ethernet Adapter module contains:

- Ethernet Adapter module, type RETA-01
- two screws (M3×10)
- this manual.

Warranty and liability information

The manufacturer warrants the equipment supplied against defects in design, materials and workmanship for a period of twelve (12) months after installation or twenty-four (24) months from date of manufacturing, whichever first occurs. The local ABB office or distributor may grant a warranty period different to the above and refer to local terms of liability as defined in the supply contract.

The manufacturer is not responsible for

- any costs resulting from a failure if the installation, commissioning, repair, alternation, or ambient conditions of the drive do not fulfil the requirements specified in the documentation delivered with the unit and other relevant documentation
- units subjected to misuse, negligence or accident
- units comprised of materials provided or designs stipulated by the purchaser.

In no event shall the manufacturer, its suppliers or subcontractors be liable for special, indirect, incidental or consequential damages, losses or penalties.

If you have any questions concerning your ABB drive, please contact the local distributor or ABB office. The technical data, information and specifications are valid at the time of printing. The manufacturer reserves the right to modifications without prior notice.

Quick start-up guide

Overview

This chapter presents the steps to take during the start-up of the RETA-01 Ethernet Adapter module. For more detailed information, see chapters *Mechanical installation*, *Electrical installation*, *Network configuration*, *Drive configuration*, and *Communication* elsewhere in this manual.



WARNING! Follow the safety instructions given in this manual and the *Hardware Manual* of the drive.

Preliminary preparation

- Before installation of the module, write down the MAC ID of the module (printed on a sticker on the back of the module).
- Make sure you have the two screws for fastening the module.

Mechanical installation

- Insert the RETA-01 into its specified slot in the drive (SLOT2 for ACS550, SLOT1 for ACS800).
- Fasten the two screws.

Electrical installation

- Connect the Ethernet cable (RJ-45 connector) to the RETA-01 module. Standard CAT 5 UTP or STP cables can be used. Avoid parallel runs with power (e.g. motor) cables.

Drive configuration

- Power up the drive. The “MODULE STATUS” LED should be green. If the network cable is connected to an active network, the green “LINK/ACTIVITY” LED should also be lit or blinking.

- The detailed procedure of activating the drive for communication with the module is dependent on the drive type. Normally, a parameter must be adjusted to activate the communication. Refer to the *Firmware Manual* of the drive for information on the communication settings. With an ACS550 drive, set parameter 98.02 COMM PROT SEL to EXT FBA. With an ACS800, set parameter 98.02 COMM. MODULE LINK to FIELDBUS and parameter 98.07 COMM PROFILE to ABB DRIVES or GENERIC according to the selected communication protocol and profile.
- If the configuration is correct, parameter group 51 should appear in the parameter list of the drive and show the status of the RETA-01 configuration parameters.

Network configuration

To enable communication through the Ethernet network, the module needs a valid IP address. There are numerous ways of setting the module IP address; see chapter *Network configuration*.

- One way of setting the IP address is to use the ARP (Address Resolution Protocol) command from a PC. The new IP address will be stored in the RETA-01 configuration parameters. An example of how to change the IP address from the DOS Prompt window is shown below. In the example, the IP address is 192.100.100.1, and the MAC ID is 00-30-11-FF-00-53 (MAC ID is printed on a sticker on the housing of the module).

```
arp -s <192.100.100.1> <00-30-11-FF-00-53>
ping <192.100.100.1>
arp -d <192.100.100.1>
```

If the connection is established, the module answers:

```
Reply from 192.100.100.1: bytes=32 time=1ms
TTL=28
...
```

If the connection is not established, the DOS prompts:

```
Request timed out.
Request timed out.
...
```

In case this happens, try to set the IP address again and make sure that you typed everything correctly

- Another way to set IP address is to use the control panel of the drive. Set IP address to RETA-01 configuration parameters 51.04 - 51.07, subnet mask to parameters 51.08 - 51.11 and gateway address to parameters 51.12 - 51.15 if necessary. Set RETA-01 configuration parameter 51.27 to REFRESH to enable the network settings.

Communication

The module is now ready to operate with Modbus/TCP or EtherNet/IP protocol. The protocol and communication profile used in the application can be selected with a RETA-01 configuration parameter, “PROTOCOL”:

0 = Modbus/TCP
1 = EtherNet/IP AC/DC communication profile
2 = EtherNet/IP ABB Drives communication profile

Note: With ACS550 the profile selection is automatic. With ACS800 the profile must be selected with parameter 98.07 as follows:

- Modbus/TCP: 98.07 = ABB DRIVES
- Ethernet/IP AC/DC communication profile: 98.07 = GENERIC
- Ethernet/IP ABB Drives communication profile: 98.07 = ABB DRIVES

Modbus/TCP master configuration

- Modbus/TCP is based on data registers, which hold IO and parameter values. See chapter *Communication* for register mapping and supported function codes.

Ethernet/IP master configuration

- Add RETA-01 adapter to device configuration

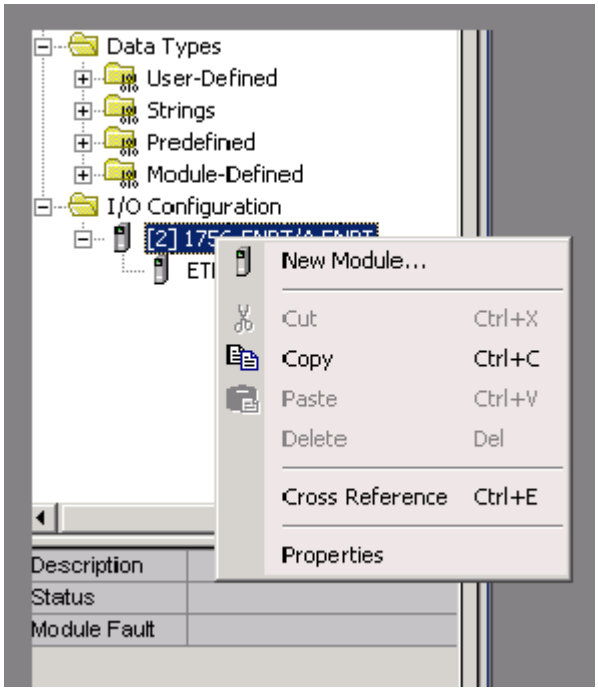

Figure 2. RSlogix 5000: Adding new module to I/O Configuration.

- Set “comm Format” to “Data-INT”, IP address, input and output assemblies and their sizes. Disable the “Configuration” assembly instance (1) by setting its size to ‘0’.

- Use Class Instance Editor to edit the attributes of Ethernet/IP objects if necessary.

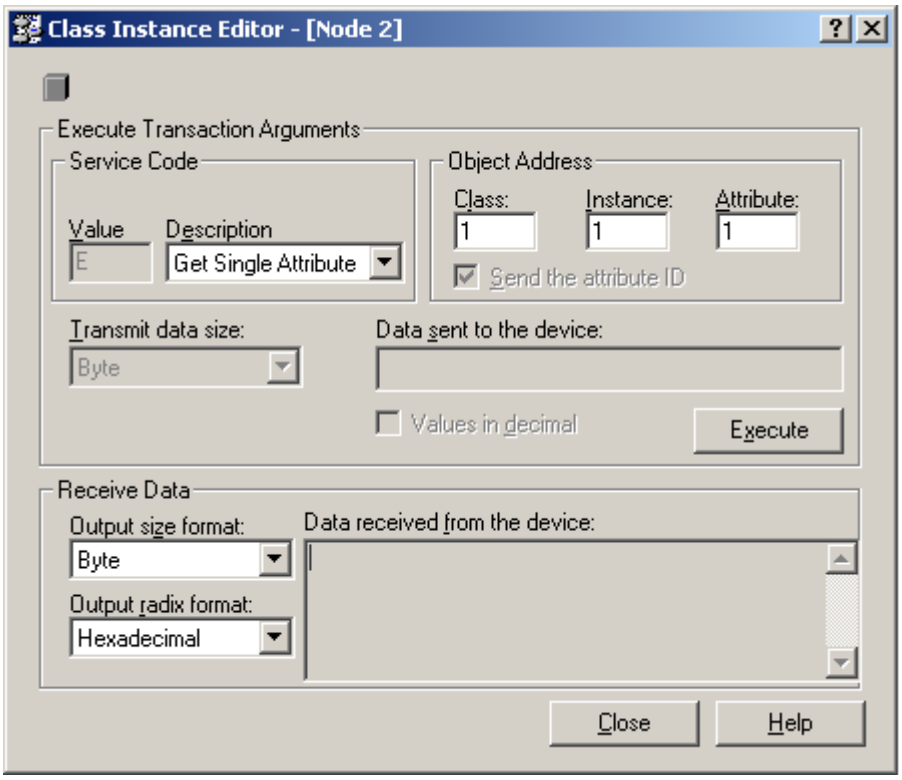

Figure 3. RSNetWorks for Ethernet-IP: Class Instance Editor

Example 1: Extended Speed Control (AC/DC communication profile) on ACS800 Standard application

- Set “comm Format” to “Data-INT”
- Set IP address to ‘10.0.0.6’
- Set input assembly instance to ‘71’ and size to ‘2’
- Set output assembly instance to ‘21’ and size to ‘2’
- Set configuration instance to ‘1’ and size to ‘0’

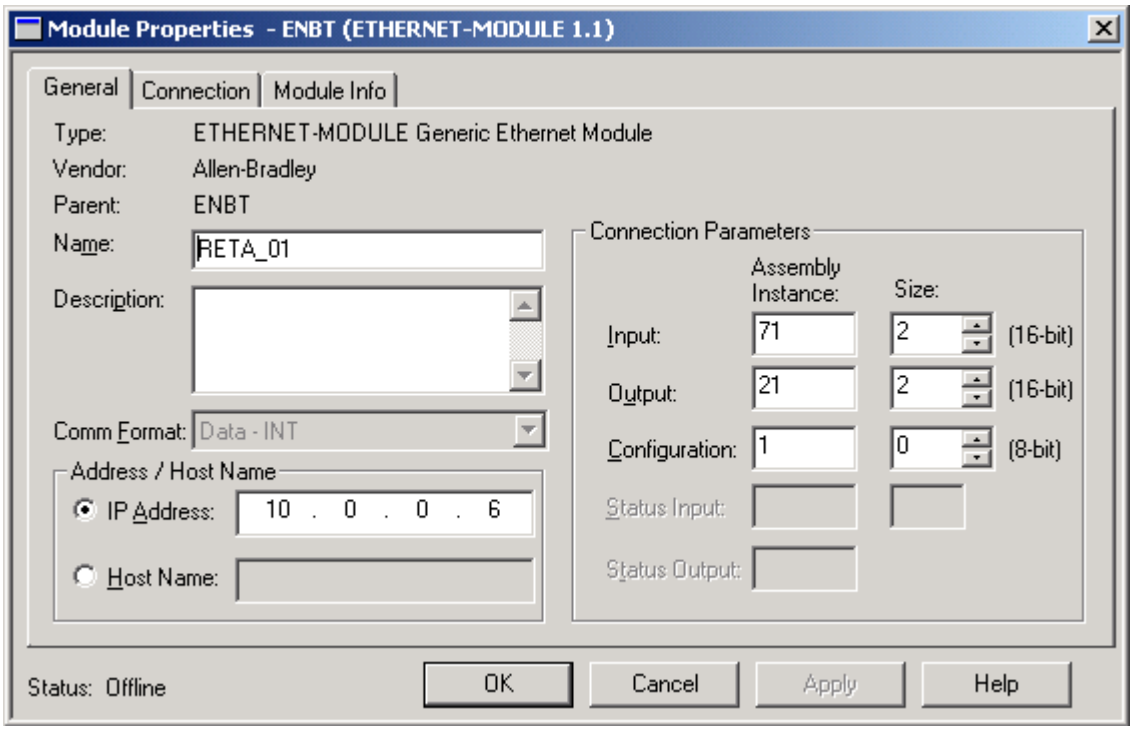

Figure 4. RSlogix 5000: Setting up the Generic Ethernet Module to use Extended Speed Control assembly

Table 1. Drive configuration for Extended Speed Control

Drive parameter	**Example setting for ACS800**
10.01 EXT1 STRT/STP/DIR	COMM.CW
10.03 REF DIRECTION	REQUEST
11.03 EXT1 REF1 SELECT	COMM.REF
16.04 FAULT RESET SEL	COMM.CW
98.02 COMM. MODULE LINK	FIELDBUS
98.07 COMM PROFILE	GENERIC
51.01 MODULE TYPE	ETHERNET
51.02 COMM RATE	0 (Auto-negotiation)
51.03 DHCP	1 (Enabled)
51.04 - 51.07 IP ADDRESS	10.0.0.6
51.08 - 51.11 SUBNET MASK	255.255.255.0
51.12 - 51.15 GW ADDRESS	0.0.0.0
51.16 PROTOCOL	1 (AC/DC profile)

Example 2: User Specific Control (ABB Drives communication profile) on ACS550

- Set “comm Format” to “Data-INT”
- Set IP address to ‘10.0.0.6’
- Set input instance to ‘103’ and size to ‘3’
- Set output instance to ‘102’ and size to ‘2’
- Set configuration instance to ‘1’ and size to ‘0’

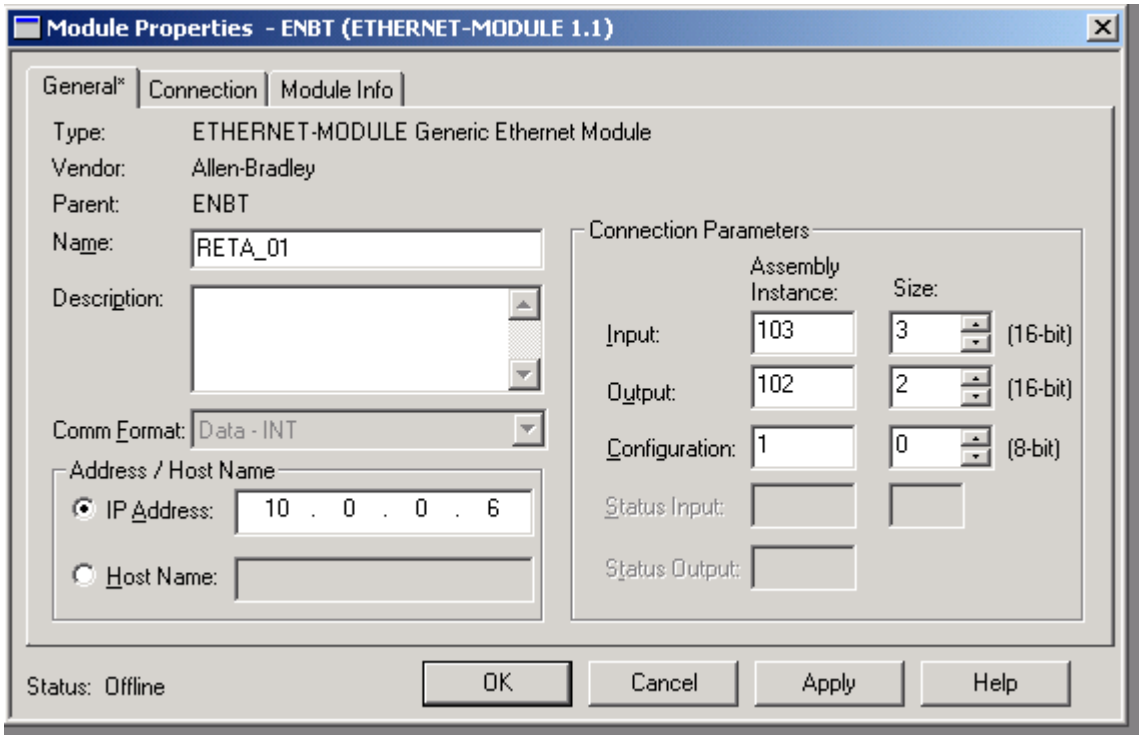

Figure 5. RSlogix 5000: Setting up the Generic Ethernet Module to use User Specific Control assembly

Table 2. Drive configuration for User Specific Control

Drive parameter	**Example setting for ACS550**
10.01 EXT1 COMMANDS	COMM
10.03 DIRECTION	REQUEST
11.03 REF1 SELECT	COMM
16.04 FAULT RESET SEL	COMM
98.02 COMM PROT SEL	EXT FBA
51.01 MODULE TYPE	ETHERNET
51.02 COMM RATE	0 (Auto-negotiation)
51.03 DHCP	1 (Enabled)
51.04 - 51.07 IP ADDRESS	10.0.0.6
51.08 - 51.11 SUBNET MASK	255.255.255.0
51.12 - 51.15 GW ADDRESS	0.0.0.0
51.16 PROTOCOL	2 (ABB Drives profile)
51.19 OUTPUT 1	1 (Command word)
51.20 OUTPUT 2	2 (Reference 1)
51.23 INPUT 1	4 (Status word)
51.24 INPUT 2	5 (Actual value 1)
51.25 INPUT 3	104 (Par. 1.04 CURRENT)

Mechanical installation



WARNING! Follow the safety instructions given in this manual and in the *Hardware Manual* of the drive.

Mounting

The RETA-01 is to be inserted into its specific position in the drive. The module is held in place with plastic retaining clips and two screws. The screws also provide the earthing of the CAT 5 STP cable shield connected to the module, and interconnect the GND signals of the module and the control board of the drive.

On installation of the module, the signal and power connection to the drive is automatically made through a 34-pin connector.

Mounting procedure:

- Insert the module carefully into its position inside the drive until the retaining clips lock the module into position.
- Fasten the two screws (included) to the stand-offs.
- Set the IP address DIP switch of the module to the required position.

Note: Correct installation of the screws is essential for fulfilling the EMC requirements and for proper operation of the module.

Electrical installation



WARNING! Follow the safety instructions given in this manual and in the *Hardware Manual* of the drive.

General cabling instructions

Arrange the network cable as far away from the motor cables as possible. Avoid parallel runs. Use bushings at cable entries.

Ethernet connection

The network cable is connected to the RJ45 connector (X1) on the RETA-01 module. Standard CAT 5 UTP and CAT 5 STP cables can be used. In case CAT 5 STP is used, the cable shield is internally connected to drive frame through the module.

Drive configuration

Overview

This chapter gives information on configuring the RETA-01 Ethernet Adapter module and the drive.

RETA-01 configuration

After the RETA-01 Ethernet Adapter module has been mechanically and electrically installed according to the instructions in chapters *Mechanical installation* and *Electrical installation*, the drive must be prepared for communication with the module.

ABB drives can receive control information from multiple sources including digital inputs, analogue inputs, the drive control panel and a communication module (e.g. RETA-01). ABB drives allow the user to separately determine the source for each type of control information (Start, Stop, Direction, Reference, Fault Reset, etc.). In order to give the fieldbus master station the most complete control over the drive, the communication module must be selected as source for this information.The detailed procedure of activating the drive for communication with the module is dependent on the drive type. Normally, a parameter must be adjusted to activate the communication. Please refer to the drive documentation.

As communication between the drive and the RETA-01 is established, several configuration parameters are copied to the drive. These parameters must be checked first and adjusted if necessary. The alternative selections for these parameters are discussed in more detail below the table.

Note: The new settings take effect only when the module is powered up the next time or when the module receives a ‘Fieldbus Adapter parameter refresh’ (Parameter 51.27) command from the drive.

Table 3. The RETA-01 configuration parameters

Par. no.	Parameter name	Alternative settings	Default setting
1	MODULE TYPE	(Read-only)	ETHERNET
2	Comm rate	**(0)** Auto-negotiate; **(1)** 100 Mbit/s, full duplex; **(2)** 100 Mbit/s, half duplex; **(3)** 10 Mbit/s, full duplex; **(4)** 10 Mbit/s, half duplex	**(0)** Auto-negotiate
3	DHCP	**(0)** DHCP disabled; **(1)** DHCP enabled	**(1)** DHCP enabled
4	IP address 1	0…255	0
5	IP address 2	0…255	0
6	IP address 3	0…255	0
7	IP address 4	0…255	0
8	Subnet mask 1	0…255	0
9	Subnet mask 2	0…255	0
10	Subnet mask 3	0…255	0
11	Subnet mask 4	0…255	0
12	GW address 1	0…255	0
13	GW address 2	0…255	0
14	GW address 3	0…255	0
15	GW address 4	0…255 (0)	0
16	Protocol	**(0)** Modbus/TCP; **(1)** Ethernet/IP AC/DC communication profile; **(2)** Ethernet/IP ABB Drives communication profile	**(0)** Modbus/TCP
17	Modbus timeout	0…65535	0
18	Stop function	**(0)** Ramp stop; **(1)** Coast stop	**(0)** Ramp stop
19	Output 1	0…65535	0
20	Output 2	0…65535	0

21	Output 3	0…65535	0
22	Output 4	0…65535	0
23	Input 1	0…65535	0
24	Input 2	0…65535	0
25	Input 3	0…65535	0
26	Input 4	0…65535	0

1 MODULE TYPE

This parameter shows the module type as detected by the drive. The value cannot be adjusted by the user.

If this parameter is undefined, the communication between the drive and the module has not been established.

2 Comm rate

Defines the baud rate for the Ethernet interface.

0 = Auto-negotiate
1 = 100 Mbit/s, full duplex
2 = 100 Mbit/s, half duplex
3 = 10 Mbit/s, full duplex
4 = 10 Mbit/s, half duplex

3 DHCP

The Dynamic Host Configuration Protocol (DHCP) is an Internet protocol for automating the configuration of computers that use TCP/IP. DHCP can be used to automatically assign IP addresses, to deliver TCP/IP stack configuration parameters such as the subnet mask and default router, and to provide other configuration information.

0 = DHCP disabled
1 = DHCP enabled

4 IP address 1
5 IP address 2
6 IP address 3
7 IP address 4

An IP address is assigned to each TCP/IP node on an Ethernet network. IP addresses consist of four decimal integers in the range of 0…255 separated by periods, each integer representing the value of one byte (8 bits, octet) in the IP address. These parameters define the four octets of the IP address.

Note: Setting any actuator of DIP switch S1 enables hardware address selection, in which case the IP address is of the format 192.168.0.xxx. The fourth octet is defined by the DIP switch. See chapter *Network configuration*.

---

8 Subnet mask 1
9 Subnet mask 2
10 Subnet mask 3
11 Subnet mask 4

Subnet masks are used for splitting networks into subgroups, or subnets. A subnet mask is a binary pattern that is matched up with the IP address to turn part of the address field into a field for subnets. These parameters define the four octets of the subnet mask.

12 GW address 1
13 GW address 2
14 GW address 3
15 GW address 4

Gateways connect individual physical networks into a system of networks. When a node needs to communicate with a node on another network, the gateway transfers the data between the two networks. These parameters define the four octets of the gateway address.

16 Protocol

Selects the application protocol and communication profile for the network communication.

0 = Modbus/TCP

1 = EtherNet/IP AC/DC communication profile

2 = EtherNet/IP ABB Drives communication profile

17 Modbus timeout

The Modbus protocol has no implementation for time-out on application layer and this may be required when controlling a drive. A supervision method has been implemented for this purpose. If Modbus timeout is set to zero, this feature is disabled. The unit of the parameter is 100 milliseconds (e.g. ‘22’ will give a timeout of 2.2 seconds).

If the communication fault function of the drive is activated, Modbus timeout is the sum of communication fault time and the time defined here.

18 Stop function

Defines the motor stopping method.

0 = Ramp stop

1 = Coast stop

Note: This parameter is only effective if the EtherNet/IP network protocol is selected at parameter *16 Protocol*.

---

19 Output 1
20 Output 2
21 Output 3
22 Output 4

When Modbus/TCP protocol is in use, these parameters define the output data words or drive parameters that are updated cyclically between the drive and RETA-01. For the user this can be seen as faster response for the Modbus queries.

When Ethernet/IP protocol is in use, these parameters define the data words or drive parameters that can be sent using Assembly object instance 102 (see chapter *Communication*).

The contents are defined by a decimal number in the range of 0 to 65535 as follows:

0	Not used	
1…99	Data set area of the drive	
	1	Data set 1 word 1
	2	Data set 1 word 2
	3	Data set 1 word 3
	4	Data set 2 word 1
	5	Data set 2 word 2
	• • •	• • •
	99	Data set 33 word 3
101…9999	Parameter area of the drive	
	Format: (x)xyy, where (x)x = actual signal group or parameter group; yy = actual signal or parameter index. E.g. 103 = actual signal 01.03; 2202 = parameter 22.02.	
10000…65535	Not supported by the drive	

23 Input 1
24 Input 2
25 Input 3
26 Input 4

When Modbus/TCP protocol is in use, these parameters define the input data words or drive parameters that are updated cyclically between the drive and RETA-01. For the user this can be seen as faster response for the Modbus queries.

When Ethernet/IP protocol is in use, these parameters define the data words or drive parameters that can be read using Assembly object instance 103 (see chapter *Communication*).

The contents are defined by a decimal number in the range of 0 to 65535 as follows:

<table>
<tr><td>0</td><td colspan="2">Not used</td></tr>
<tr><td rowspan="8">1…99</td><td colspan="2">Data set area of the drive</td></tr>
<tr><td>1</td><td>Data set 1 word 1</td></tr>
<tr><td>2</td><td>Data set 1 word 2</td></tr>
<tr><td>3</td><td>Data set 1 word 3</td></tr>
<tr><td>4</td><td>Data set 2 word 1</td></tr>
<tr><td>5</td><td>Data set 2 word 2</td></tr>
<tr><td>• • •</td><td>• • •</td></tr>
<tr><td>99</td><td>Data set 33 word 3</td></tr>
<tr><td rowspan="2">101…9999</td><td colspan="2">Parameter area of the drive</td></tr>
<tr><td colspan="2">Format: (x)xyy, where (x)x = actual signal group or parameter group; yy = actual signal or parameter index. E.g. 103 = actual signal 01.03; 2202 = parameter 22.02.</td></tr>
<tr><td>10000…65535</td><td colspan="2">Not supported by the drive</td></tr>
</table>

Network configuration

Overview

The network configuration of the RETA-01 can be done using several methods. The following flowchart shows the sequence in which different settings are read. The table below gives detailed information on each different configuration methods.

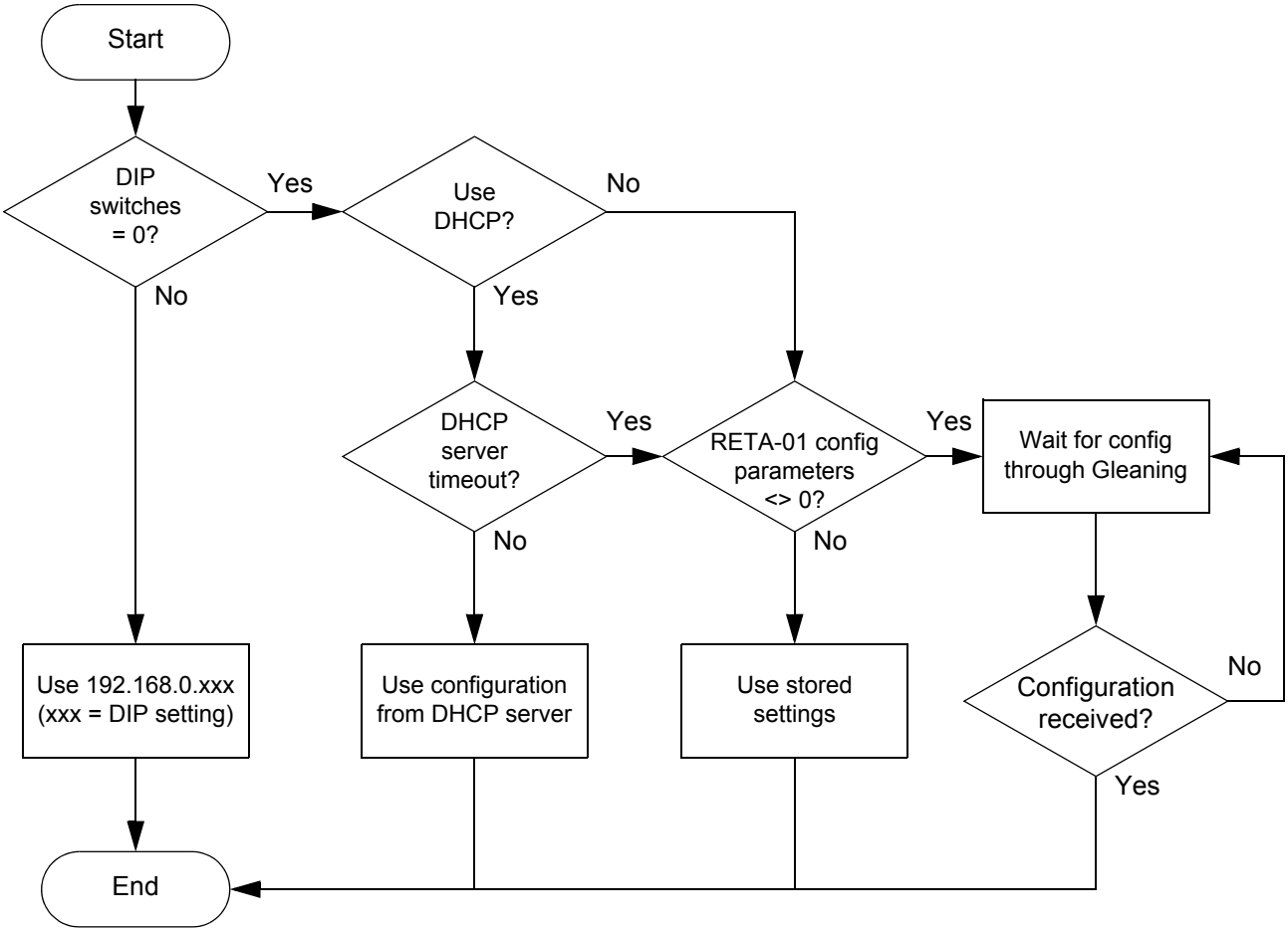

Figure 6. Settings flowchart

Table 4. Configuration methods

<table>
<tr><th>Method</th><th>Description</th><th>Note</th></tr>
<tr><td>DIP switch (S1)</td><td>By default, the IP address is defined by software (see chapter Communication). Setting any DIP actuator to ON enables hardware selection. DIP actuators 1 to 8 define the last octet (1 to 254) of the IP address in binary. Actuator 8 represents the least significant bit.
<table>
<tr><td>IP address:</td><td>192.168.0.xxx</td></tr>
<tr><td>Subnet mask:</td><td>255.255.255.0</td></tr>
<tr><td>Gateway:</td><td>0.0.0.0</td></tr>
</table>
where xxx stands for a value between 1 and 254 and is selected by DIP switch S1. Example DIP settings:
<table>
<tr><th>Intranet IP address</th><th>S1 actuator positions</th></tr>
<tr><td>(Selected by software)</td><td>OFF oooooooo
ON
12345678</td></tr>
<tr><td>192.168.0.1</td><td>OFF ooooooo
ON o
12345678</td></tr>
<tr><td>192.168.0.2</td><td>OFF oooooo o
ON o
12345678</td></tr>
<tr><td>• • •</td><td>• • •</td></tr>
<tr><td>192.168.0.255</td><td>OFF
ON oooooooo
12345678</td></tr>
</table>
</td><td>Only read at start-up.
Only for intranet use.</td></tr>
</table>

Method	Description	Note
DHCP/BOOTP	Automatically receive the configuration from a DHCP server.	A DHCP server is required on the network.
Settings stored in RETA-01 configuration parameters	Use the configuration stored in the RETA-01 configuration parameters. See Table *3* in the chapter *Drive configuration*.	RETA-01 must be restarted or parameters refreshed (RETA-01 configuration parameter 27 'REFRESH') for any configuration changes to take effect.

Gleaning (ARP)	Change the IP address from a PC using the following commands:
	
	`arp -s <IP address> <MAC address>`
	`ping <IP address>`
	`arp -d <IP address>`
	
	The `arp -s` command will store the IP and MAC addresses in the PC ARP table. When the `ping` command is executed, the PC will send the message to the module using the MAC address. The module changes its IP address to the given one.
		The MAC address of the module can be found on a label on the RETA-01 module.

Method	Description	Note
EtherNet/IP	Send IP parameters to the TCP/IP Interface object (Class 0xF5).	RETA-01 must be restarted or parameters refreshed (RETA-01 configuration parameter 27 'REFRESH') for any configuration changes to take effect.

Data transfer rates supported

The RETA-01 supports 10 Mbit/s and 100 Mbit/s data transfer rates. The RETA-01 automatically detects the data transfer rate used.

Other network components

RETA-01 uses multicast messages for producing instances. Ethernet switches require a feature called "IGMP Snooping" (Internet Group Management Protocol) to avoid network load caused by the multicast messages. IGMP Snooping simply confirms that multicast messages are sent to correct devices.

Communication profiles

Overview

This chapter describes the communication profiles used in the communication between the Modbus/TCP and Ethernet/IP networks, the RETA-01 module, and the drive.

Communication profiles

Communication profiles are ways of conveying control commands (Control word, Status word, references and actual values) between the master station and the drive.

With the RETA-01 module, the Ethernet/IP network may employ either the ODVA AC/DC drive profile or the ABB Drives profile. Modbus/TCP network may employ only the ABB Drives profile.

The ODVA AC/DC drive profile

This section briefly describes the ODVA AC/DC Drive profiles. Additional information can be obtained from www.odva.org.

An Ethernet/IP node is modelled as a collection of abstract objects. Each object represents the interface to and behaviour of a component within the product. The ODVA AC/DC Drive Profiles define a collection of objects suitable for the control of AC and DC drives. Objects supported by the RETA-01 Ethernet Adapter are listed in section *Class objects* on page *65*. Objects are defined by:

- Service
- Class
- Instance
- Attribute
- Behaviour

For example, to set the drive speed reference, the Set_Attribute_Single service can be requested for Attribute

SpeedRef of the Class AC/DC Drive Object. The resulting behaviour is that the reference speed of the drive is set to the requested value.

This is an example of *Explicit Messaging* where each attribute of a class is set individually. While this is allowed, it is inefficient. Instead *Implicit Messaging* using Input and Output Assembly Instances is recommended. *Implicit Messaging* allows the Ethernet/IP Master to set or get predefined groups of attributes in a single message exchange. Assembly Instances supported by the RETA-01 are listed and defined in chapter *Communication*, page *55*.

ODVA output attributes

This section briefly describes the instances found in the ODVA AC/DC Drive Profiles output assemblies. Not all attributes listed here will be supported by all output assembly instances.

Run Forward & Run Reverse (Control Supervisor Object)

These attributes are used to assert run and stop commands to Control Supervisor Object state machine according to the following table.

Table 5. Run/Stop event matrix

RunFwd	RunRev	Trigger event	Run type
0	0	Stop	N/A
0 → 1	0	Run	RunFwd
0	0 → 1	Run	RunRev
0 → 1	0 → 1	No action	N/A
1	1	No action	N/A
0 → 1	1	Run	RunRev
1	0 → 1	Run	RunFwd

Fault Reset (Control Supervisor Object)

This attribute resets a drive fault on a transition from zero to one if the condition that caused the fault has been cleared.

Net Ctrl (Control Supervisor Object)

This attribute requests that the drive Run/Stop command be supplied locally (Net Ctrl = 0) or by the network (Net Ctrl = 1).

Net Ref (AC/DC Drive Object)

This attribute requests that the drive speed and torque references be supplied locally (Net Ref = 0) or by the network (Net Ref = 1).

Speed Reference (AC/DC Drive Object)

This attribute is the speed reference for the drive. The units are scaled by the Speed Scale attribute of the AC/DC Drive Object.

Torque Reference (AC/DC Drive Object)

This attribute is the torque reference for the drive. The units are scaled by the Torque Scale attribute of the AC/DC Drive Object.

ODVA input attributes

This section briefly describes the instances found in the ODVA AC/DC Drive Profiles input assemblies. Not all attributes listed here will be supported by all input assembly instances.

Faulted (Control Supervisor Object)

This attribute indicates that the drive has experienced a fault. The fault code may be read from the FaultCode attribute of the Control Supervisor Object.

Warning (Control Supervisor Object)

This attribute indicates that the drive is experiencing a warning condition. The warning code may be read from the WarnCode attribute of the Control Supervisor Object.

Running Forward (Control Supervisor Object)

This attribute indicates that the drive is running in the forward direction.

Running Reverse (Control Supervisor Object)

This attribute indicates that the drive is running in the reverse direction.

Ready (Control Supervisor Object)

This attribute indicates that the Control Supervisor Object state machine (see “State” below) is in the Ready, Running or Stopping state.

Ctrl From Net (Control Supervisor Object)

This attribute indicates if the Run/Stop command is being supplied locally (Ctrl From Net = 0) or by the network (Ctrl From Net = 1).

Ref From Net (AC/DC Drive Object)

This attribute indicates if the Speed and Torque references are being supplied locally (Ref From Net = 0) or by the network (Ref From Net = 1).

At Reference (AC/DC Drive Object)

This attribute indicates the drive is operating at the specified speed or torque reference.

State (Control Supervisor Object)

This attribute indicates the current state of the Control Supervisor Object.

Table 6. Control supervisor states

State	Description	State	Description
0	Vendor Specific	4	Enabled
1	Startup	5	Stopping
2	Not Ready	6	Fault Stop
3	Ready	7	Faulted

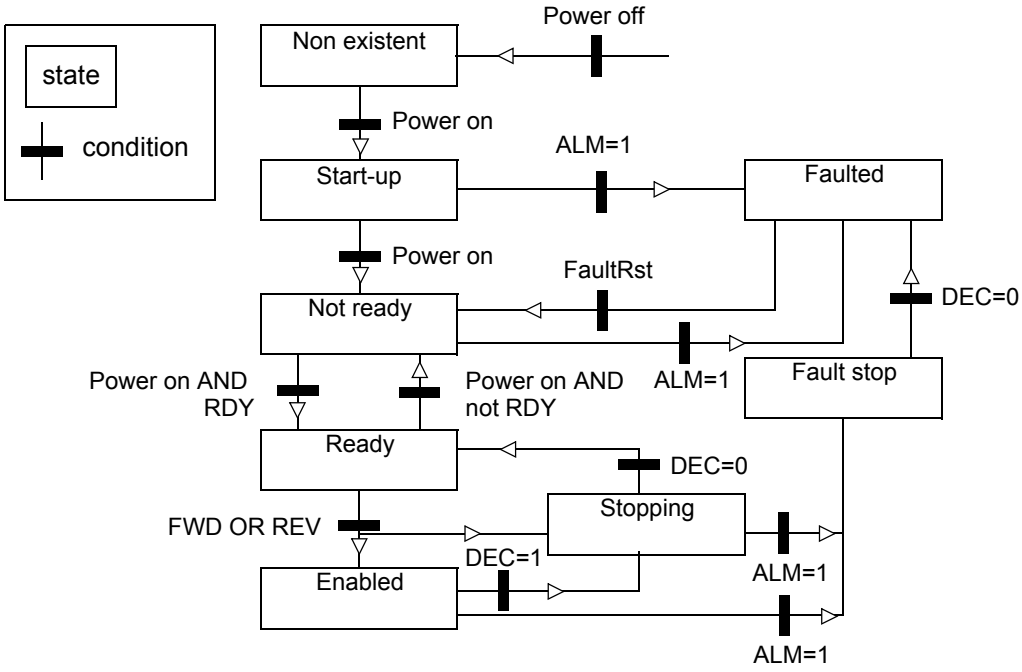

Figure 7. State transition diagram

Speed Actual (AC/DC Drive Object)

This attribute indicates the actual speed at which the drive is operating. The units are scaled by the SpeedScale attribute of the AC/DC Drive Object.

Torque Actual (AC/DC Drive Object)

This attribute indicates the actual torque at which the drive is operating. The units are scaled by the Torque Scale attribute of the AC/DC Drive Object.

ABB Drives communication profile

The control word and the status word

The Control Word is the principal means for controlling the drive from a fieldbus system. It is sent by the fieldbus master station to the drive through the adapter module. The drive switches between its states according to the bit-coded instructions on the Control Word, and returns status information to the master in the Status Word.

References

References are 16-bit words containing a sign bit and a 15-bit integer. A negative reference (indicating reversed direction of rotation) is formed by calculating the two’s complement from the corresponding positive reference.

Actual values

Actual values are 16-bit words containing information on the operation of the drive. The functions to be monitored are selected by a drive parameter.

Note: For detailed description of the drive's control word, status word, references and actual signals see the *Firmware Manual* of the drive.

Communication

Overview

This chapter describes the Modbus/TCP and EtherNet/IP messaging used in the communication with the drive.

Protocols

The RETA-01 module supports the Modbus/TCP protocol according to Modbus/TCP Specification 1.0, and the EtherNet/IP protocol. User must select, which protocol to use.

Modbus/TCP

Overview

This chapter describes the Modbus/TCP communication protocol for RETA-01. For detailed information on Modbus/TCP communication, refer to Modbus/TCP protocol specification 1.0.

RETA-01 uses ABB Drives communication profile with Modbus/TCP.

Register read and write

The drive parameter and data set information is mapped into a 4xxxx register area. This holding register area can be read from an external device, and an external device can modify the register values by writing to them.

There are no set-up parameters for mapping the data to the 4xxxx register area. The mapping is pre-defined and corresponds directly to the drive parameter grouping, which is being used by the local drive control panel.

All parameters are available for reading. The parameter writes are verified for correct value, and for valid register addresses. Some parameters never allow writing (e.g. actual signals), some allow writing only when the drive is stopped (e.g. set-up variables), and some can be modified at any time.

Register mapping

The drive parameters are mapped to the 4xxxx area as follows:

40001…40096 are reserved for data sets

40101…49999 are reserved for parameters.

In this mapping, the thousands and hundreds correspond to the group number, while the tens and ones correspond to the parameter number within a group. Register addresses 4GGPP are shown in the table below. In the table, GG represents the group number while PP is the parameter index within the group.

Table 7. Parameter mapping

Parameter	4**GGPP**	**GG**	**PP**
Data sets Each data set consists of 3 data words. For example, ‘Data word 2.3’ refers to the 3rd word in data set 2.	4**0001**…4**0096**	**00** Data sets	**01** Data word 1.1 **02** Data word 1.2 **03** Data word 1.3 **04** Data word 2.1 **05** Data word 2.2 **06** Data word 2.3 **07** Data word 3.1 **…** **94** Data word 32.1 **95** Data word 32.2 **96** Data word 32.3
Parameters	4**0101**…4**0199**	**01** Group 01	**01** Index 01 **02** Index 02 **…** **99** Index 99
	4**0201**…4**0299**	**02** Group 02	**01** Index 01 **02** Index 02 **…** **99** Index 99
	…	…	…
	4**9901**…4**9999**	**99** Group 99	**01** Index 01 **02** Index 02 **…** **99** Index 99

Register addresses, which are not allocated to any drive parameter or data set, are invalid. Attempting to read from or write to such an address will make the Modbus/TCP interface return an exception code to the controller.

Refer to the drive manuals for drive-specific information such as the data sets supported, and parameter numbers. Data set registers are updated in a cyclic interval. Updating of parameter registers happens at a slower interval.

Exception codes

The RETA-01 supports the Modbus exception codes shown below.

Table 8. Supported exception codes

Exception code	Name	Description
01	Illegal function	Unsupported command
02	Illegal data address	Address does not exist or is read/write-protected
03	Illegal data value	Value is outside minimum and maximum limits. Parameter is read-only

Function codes

The RETA-01 supports the Modbus function codes shown below.

Table 9. Supported function codes

Function code	Name	Description	Modbus class
03	Read holding registers	Reads the binary contents of the holding registers (4X references) in the slave.	0
06	Preset single register	Presets a value into a single holding register (4X reference).	1
16 (10h)	Preset multiple registers	Presets values into a sequence of holding registers (4X references).	0
23 (17h)	Read/Write registers	Performs a combination of one read and one write operation in a single Modbus transaction. The function first reads a group of 4XXXX registers and then writes new contents to a another group of 4XXXX registers.	2

EtherNet/IP

Overview

This chapter describes the Ethernet/IP communication protocol for RETA-01. For detailed information on Ethernet/IP communication, refer to ODVA Ethernet/IP specifications Release 1.0.

Introduction to Ethernet/IP

Ethernet/IP is a protocol based on Common Industrial Protocol (CIP) technology, which is also the framework for both DeviceNet and ControlNet. Ethernet/IP specifies the wiring, and the data transfer through the bus.

The RETA-01 module can act as a server on an EtherNet/IP network.

Object modelling and functional profiles

One of the main features of EtherNet/IP is object modelling. EtherNet/IP requires mandatory objects specified by ODVA in addition to some vendor-specific objects. A group of objects can be described with a Functional Profile. The RETA-01 realizes the ODVA AC/DC Drive Functional Profile with additional features.

Assembly objects

I/O Assembly Instances may be referred to as Block Transfer of data. Intelligent devices realizing a Functional Profile, such as the RETA-01, have several objects. Since it is not possible to transmit more than one object data through a single connection, it is practical and more efficient to group attributes from different objects into a single I/O connection using the Assembly object. The Assembly object acts as a tool for grouping these attributes. The RETA-01 uses static assemblies (in other words, fixed set of object data), except for the User Specific Control assembly and the Extended Speed Control Plus Drive Parameters assembly, where user can select the I/O parameters.

The module has two communication profiles as represented above, AC/DC drive profile and ABB Drives profile.

Assembly instances 20, 70, 21, 71, 121 and 171 are used in the AC/DC drive profile and instances 100, 101, 102 and 103 in ABB Drives profile. User selects the profile with RETA-01 configuration parameter 16 PROTOCOL (with ACS800 also parameter 98.07 is changed). The following table shows the possible combinations.

Table 10. Possible combinations of parameters

RETA-01 configuration parameter 16	**Output instances**	**Input instances**
0 = Modbus/TCP	-	-
1 = Ethernet/IP AC/DC communication profile	20, 21, 121	70, 71, 103*, 171
2 = Ethernet/IP ABB Drives communication profile	100, 102	101, 103

Note: Assembly instance 103 can be used with AC/DC drive profile if it contains only drive parameters and not data sets. Assembly instances 121 and 171 are supported from RETA-01 v2.06 onwards.

The following table shows the possible combinations of output and input instances.

Table 11. Possible combinations of output and input instances

Possible instance combinations		
Output instance	**Input instance**	**Communication profile to be used**
20	70	Generic Drive profile
	71	Generic Drive profile
	171	Generic Drive profile
	103	Generic Drive profile (See note above)

21	70	Generic Drive profile
	71	Generic Drive profile
	171	Generic Drive profile
	103	Generic Drive profile (See note above)
121	70	Generic Drive profile
	71	Generic Drive profile
	171	Generic Drive profile
	103	Generic Drive profile (See note above)
100	101	ABB Drives profile
	103	ABB Drives profile
102	101	ABB Drives profile
	103	ABB Drives profile

The following tables describe the predefined assembly instances supported by the RETA-01.

Note: The terms "input" and "output" are defined from the network master's point of view. For example, drive's status words are considered as the input data and control words as the output data. An input will produce data to the network and an output will consume data received from the network.

Basic Speed Control assembly

The Basic Speed Control assembly is defined by ODVA AC/DC Drive Profile. The format of the output assembly is:

Instance 20								
Byte	**Bit 7**	**Bit 6**	**Bit 5**	**Bit 4**	**Bit 3**	**Bit 2**	**Bit 1**	**Bit 0**
0						Fault reset		Run fwd
1								
2	Speed reference (Low byte)							
3	Speed reference (High byte)							

The format of the input assembly is:

Instance 70								
Byte	**Bit 7**	**Bit 6**	**Bit 5**	**Bit 4**	**Bit 3**	**Bit 2**	**Bit 1**	**Bit 0**
0						Running 1		Faulted
1								
2	Speed actual value (Low byte)							
3	Speed actual value (High byte)							

Note: If the Basic Speed Control or the Extended Speed Control assembly is used, it must be ensured that the fieldbus is selected as the drive control source and fieldbus specific (Generic Drive profile) Control/Status Word format is selected instead of ABB Drives profile.

Extended Speed Control assembly

The Extended Speed Control assembly is defined by ODVA AC/DC Drive Profile. The format of the output assembly is:

Instance 21								
Byte	**Bit 7**	**Bit 6**	**Bit 5**	**Bit 4**	**Bit 3**	**Bit 2**	**Bit 1**	**Bit 0**
0		NetRef	NetCtrl			Fault reset	Run reverse	Run forward
1								
2	Speed reference (Low byte)							
3	Speed reference (High byte)							

The format of the input assembly is:

Instance 71								
Byte	**Bit 7**	**Bit 6**	**Bit 5**	**Bit 4**	**Bit 3**	**Bit 2**	**Bit 1**	**Bit 0**
0	At reference	Ref From Net	Ctrl From Net	Ready	Running reverse	Running forward	Warning	Faulted
1	Drive state							
2	Speed actual value (Low byte)							
3	Speed actual value (High byte)							

Extended Speed Control plus Drive Parameters assembly

The Extended Speed Control plus Drive Parameters assembly is composed of a part defined by the ODVA AC/DC Drive Profile and a part that can be configured freely. The format of the output assembly is (RETA-01 version 2.06 onwards):

Instance 121								
Byte	**Bit 7**	**Bit 6**	**Bit 5**	**Bit 4**	**Bit 3**	**Bit 2**	**Bit 1**	**Bit 0**
0		NetRef	NetCtrl			Fault reset	Run reverse	Run forward
1								
2	Speed reference (Low byte)							
3	Speed reference (High byte)							
4	Output I/O 1 (Low Byte)							
5	Output I/O 1 (High Byte)							
6	Output I/O 2 (Low Byte)							
7	Output I/O 2 (High Byte)							
…								
67	Output I/O 32 (Low Byte)							
68	Output I/O 32 (High Byte)							

The value of Output I/O 1 to 4 sets the data word or drive parameter defined by Output I/O Par 1 to 4 respectively. See chapter *Drive configuration*.

Output I/O from 1 to 32 can also be configured through the Vendor Specific Drive I/O Map Object, class 0x91.

The format of the input assembly is:

Instance 171								
Byte	**Bit 7**	**Bit 6**	**Bit 5**	**Bit 4**	**Bit 3**	**Bit 2**	**Bit 1**	**Bit 0**
0	At reference	Ref From Net	Ctrl From Net	Ready	Running reverse	Running forward	Warning	Faulted
1	Drive state							
2	Speed actual value (Low byte)							
3	Speed actual value (High byte)							
4	Input I/O 1 (Low Byte)							
5	Input I/O 1 (High Byte)							
6	Input I/O 2 (Low Byte)							
7	Input I/O 2 (High Byte)							
…								
67	Input I/O 32 (Low Byte)							
68	Input I/O 32 (High Byte)							

The value of Input I/O 1 to 4 sets the data word or drive parameter defined by Input I/O Par 1 to 4 respectively. See chapter *Drive configuration*.

Input I/O from 1 to 32 can also be configured through the Vendor Specific Drive I/O Object (Class 91h).

Data definitions

Definitions of data in the assemblies are found in the classes specified in the table below.

Table 12. Definitions of data in the assemblies

Name	**CIP class**			
	Class	**Instance**	**Attribute**	**Name**
Run Forward	Control Supervisor	1	3	Run1
Run Rev	Control Supervisor	1	4	Run2
Fault Reset	Control Supervisor	1	12	FaultRst
NetCtrl	Control Supervisor	1	5	NetCtrl
NetRef	AC/DC drive	1	4	NetRef
Speed reference	AC/DC drive	1	8	SpeedRef
Faulted	Control Supervisor	1	10	Faulted
Warning	Control Supervisor	1	11	Warning
Running Forward	Control Supervisor	1	7	Running1
Running Reverse	Control Supervisor	1	8	Running2
Ready	Control Supervisor	1	9	Ready
CtrlFromNet	Control Supervisor	1	15	CtrlFromNet
DriveState	Control Supervisor	1	6	State
RefFromNet	AC/DC Drive	1	29	RefFromNet
At Reference	AC/DC Drive	1	3	At Reference
Speed Actual	AC/DC Drive	1	7	SpeedActual

ABB Drives Control assembly

ABB Drive Control assembly allows the use of the ABB Drives profile. The format of the output assembly is:

Instance 100								
Byte	**Bit 7**	**Bit 6**	**Bit 5**	**Bit 4**	**Bit 3**	**Bit 2**	**Bit 1**	**Bit 0**
0	Control Word (Low Byte)							
1	Control Word (High Byte)							
2	Set Speed (Low byte), Not scaled							
3	Set Speed (High byte), Not scaled							

The format of the input assembly is:

Instance 101								
Byte	**Bit 7**	**Bit 6**	**Bit 5**	**Bit 4**	**Bit 3**	**Bit 2**	**Bit 1**	**Bit 0**
0	Status Word (Low byte)							
1	Status Word (High byte)							
2	Actual Speed (Low byte), Not scaled							
3	Actual Speed (High byte), Not scaled							

User Specific Control assembly

User Specific Control assembly allows the use of the ABB Drives communication profile. The content of this assembly can be configured using Drive IO Map Object, class 0x91 and RETA-01 configuration parameters. The format of the output assembly is:

Instance 102								
Byte	**Bit 7**	**Bit 6**	**Bit 5**	**Bit 4**	**Bit 3**	**Bit 2**	**Bit 1**	**Bit 0**
0	Output I/O 1 (Low Byte)							
1	Output I/O 1 (High Byte)							
2	Output I/O 2 (Low Byte)							
3	Output I/O 2 (High Byte)							
…								
63	Output I/O 32 (Low Byte)							
64	Output I/O 32 (High Byte)							

The content of Output I/O 1 to 4 can be configured from RETA-01 configuration parameters. See chapter *Drive configuration*.

Output I/O from 1 to 32 can also be configured through the Vendor Specific Drive I/O Map Object (class 0x91).

Note: The maximum number of output I/O's supported by the drive depends on the drive type and application. E.g. ACS800 supports 12 and ACS550 15 outputs.

The format of the input assembly is:

Instance 103								
Byte	**Bit 7**	**Bit 6**	**Bit 5**	**Bit 4**	**Bit 3**	**Bit 2**	**Bit 1**	**Bit 0**
0	Input I/O 1 (Low Byte)							
1	Input I/O 1 (High Byte)							
2	Input I/O 2 (Low Byte)							
3	Input I/O 2 (High Byte)							
…								
63	Input I/O 32 (Low Byte)							
64	Input I/O 32 (High Byte)							

The content of Input I/O 1 to 4 can be configured from RETA-01 configuration parameters. See chapter *Drive configuration*.

Input I/O from 1 to 32 can also be configured through the Vendor Specific Drive I/O Object (Class 91h).

Note: The maximum number of input I/O's supported by the drive depends on the drive type and application. E.g. ACS800 supports 12 and ACS550 15 inputs.

Class objects

The objects implemented in the RETA-01 module are listed below and described in further detail on the following pages.

- Identity Object, Class 0x01
- Message Router, Class 0x02
- Assembly Object, Class 0x04
- Connection Manager, Class 0x06
- Motor Data Object, Class 0x28
- Control Supervisor Object, Class 0x29
- AC/DC Drive Object, Class 0x2A
- Vendor Specific Object, Class 0x90
- Drive IO Map Object, Class 0x91
- Configuration Object, Class 0x92
- TCP/IP Interface Object, Class 0xF5
- Ethernet Link Object, Class 0xF6

NOTE: Some object attributes are not supported by every drive application.

Identity Object, Class 0x01

This object provides identification of and general information about the device.

Services

Class services:	Get Attribute All
	Get Attribute Single
Instance services:	Get Attribute All
	Get Attribute Single
	Reset

Class Attributes

#	Attribute name	Services	Description	Dflt,Min,Max	Data type
0x01	Revision	Get	Revision of the Identity Object	1,1,1	UINT

Instance Attributes

#	Attribute name	Services	Description	Dflt, Min, Max	Data type
0x01	Vendor ID	Get	Identification of the device vendor	46	UINT
0x02	Device Type	Get	Identification of the general product type	2	UINT
0x03	Product Code	Get	Assigned vendor code to describe the device	Drive dependent (e.g. 101)	UINT
0x04	Revision	Get	Revision of the item the Identity Object represents		Array [USINT USINT]
0x05	Status	Get	Status of the Device	0,0,255	WORD
0x06	Serial Number	Get	Serial Number of the EtherNet module	N/A,N/A, N/A	UDINT
0x07	Product Name	Get	Product identification (32 characters max.)	RETA-01 and xxx	Short String

Attribute explanations

Vendor ID
The Open DeviceNet Vendor Association Inc. (ODVA) and ControlNet International manage vendor IDs. The ABB Vendor ID is 46.

Device Type
The list of device types is managed by ODVA. It is used to identify the device profile that a particular product is using.
E.g. 2 = AC drive, 13 = DC drive

Product Code
Every ABB drive type or application of the drive has a dedicated product code.

Revision
Revision attribute, which consists of Major and Minor Revisions, identifies the Revision of the RETA-01 application.

Status
This attribute represents the current status of the entire device. Its value changes as the state of the device changes. The Status attribute is a WORD, with the bit definitions in the table below.

Table 13. Bit definitions

Bit(s)	Type/Name	Definition
0	Owned	TRUE indicates the device (or an object within the device) has an owner. Within the Master/Slave paradigm the setting of this bit means that the Predefined Master/Slave Connection Set has been allocated to a master. Outside the Master/Slave paradigm the meaning of this bit is to be defined.
1		Reserved, set to 0.
2	Configured	TRUE indicates the application of the device has been configured to do something that differs from the “out–of–box” default. This does not include configuration of the communications.
3		Reserved, set to 0.
4,5,6,7		Extended device status information 0000 = Unknown 0010 = Faulted I/O connection 0011 = No I/O connection established 0100 = Non-volatile configuration bad 0110 = Connection in Run mode 0111 = Connection in Idle mode
8	Minor Recoverable Fault	TRUE indicates the device detected a recoverable problem. The problem does not cause the device to go into a faulted state.
9	Minor Unrecoverable Fault	TRUE indicates the device detected a unrecoverable problem. The problem does not cause the device to go into a faulted state.
10	Major Recoverable Fault	TRUE indicates the device detected a problem, which caused the device to go into the “Major Recoverable Fault” state.
11	Major Unrecoverable Fault	TRUE indicates the device detected a problem, which caused the device to go into the “Major Unrecoverable Fault” state.
12,13,14,15		Reserved, set to 0.

Serial Number
This attribute is a number used in conjunction with the Vendor ID to form a unique identifier for each device.

Product Name
This text string should represent a short description of the product/product family represented by the product code in attribute 3.

Reset Service

The Identity object provides a reset service. There are two different types of reset requests:

- Type 0: ‘Power Cycling Reset’. This service emulates a power cycling of the module.
- Type 1: ‘Out of box reset’. This service sets a “out-of-box” configuration for the drive and performs a reset for the module.

Message Router, Class 0x02

Services

Class services:	–
Instance services:	–

Assembly Objects, Class 0x04

The Assembly Objects binds attributes of multiple object together. This allows data of the objects to be sent and received over a single connection. Assembly objects can be used to bind input data or output data. The terms “input” and “output” are defined from the network’s point of view. An input will produce data to the network and an output will consume data received from the network.

Services

Class services:	Get Attribute Single
Instance services:	Get Attribute Single
	Set Attribute Single

Class Attributes

#	Name	Services	Description	Dflt,Min,Max	Data type
0x01	Revision	Get	Revision 2	0x0002	UINT

Instance Attributes

#	Name	Services	Description	Dflt,Min,Max	Data type
0x03	Data	Get / Set	Data produced / consumed by module	N/A, N/A, N/A	Array [BYTE]

Instances are presented above in *Communication - Assembly objects*.

Connection Manager, Class 0x06

Class 1 Connections

Class 1 connections are used to transfer I/O data, and can be established to the assembly object instances. Each class 1 connection establishes two data transports, one consuming and one producing. The heartbeat instance is used for connections that shall access only inputs or outputs. Total number of supported class 1 connections is 31.

The first four bytes consumed by the device are defined as status information (32-bit run/idle header). The header is not a requirement in the EtherNet/IP specification, but most masters today use this header. The module strips off the first four bytes of data consumed by the device and interprets the Run/Idle bit. Run/Idle operation for AC/DC Drive profile can be defined in Control Supervisor Object’s (Class 0x29) attribute NetIdleMode (20) and for ABB Drives profile in Configuration Object (Class 0x92) attribute IdleAction (7). (RETA-01 version 2.05 onwards)

Class 3 Connections

Class 3 connections are used to establish connections to the message router. Thereafter the connection is used for explicit messaging. Class 3 connections use TCP connections. The Message router supports 16 simultaneous class 3 connections.

Rated packet Interval

The module supports a minimum RPI rate of 10 ms, and a maximum of 3200 ms, for connections where the module is the connection producer. Consuming connections are unlimited.

Motor Data Object, Class 0x28

This object serves as a database for motor parameters.

Services

Class services:	Get Attribute Single
Instance services:	Get Attribute Single
	Set Attribute Single

Instance 0x01, Attributes

ID#	Attribute name	Services	Description	Motor type	Dflt, Min, Max	Data type
0x03	Motor type	Get		AC/DC	7,7,7	UINT
0x06	Rated Current	Get/Set	Rated Stator Current from motor nameplate.	AC/DC		UINT
0x07	Rated Voltage	Get/Set	Rated Base Voltage from motor nameplate.	AC/DC		UINT
0x08	Rated Power	Get/Set	Rated Power at Rated Frequency	AC/DC		
0x09	Rated Frequency	Get/Set		AC		UINT
0x0C	Pole Count	Get		AC		UINT
0x0F	Base Speed	Get/Set		AC/DC		UINT

Control Supervisor Object, Class 0x29

This object models all the management functions for devices within the “Hierarchy of Motor Control Devices” and is active only when using AC/DC Drive profile. The behaviour of motor control devices is described below in Table *5. Run/Stop event matrix* and Figure *7. State transition diagram*.

Services supported

Class services:	Get Attribute Single
Instance services:	Reset
	Get Attribute Single
	Set Attribute Single

Instance 0x01 attributes

ID#	Attribute name	Services	Description	Data type
0x03	Run 1 [1)]	Get/Set	0 = Stop, 1 = Run	BOOL
0x04	Run 2 [2)]	Get/Set	0 = Stop, 1 = Run	BOOL
0x05	Net Control [2)]	Get/Set	0 = Local Control, 1 = Network Control	BOOL
0x06	State	Get	1 = Start/up 2 = Not ready 3 = Ready 4 = Enabled 5 = Stopping 6 = FaultStop 7 = Faulted	UINT8
0x07	Running 1 [3)]	Get	0 = Stopped, 1 = Running	BOOL
0x08	Running 2 [4)]	Get	0 = Stopped, 1 = Running	BOOL
0x09	Ready	Get	1 = Ready, Enabled or Stopping 0 = Other state	BOOL
0x0A	Faulted	Get	0 = Not faulted, 1 = Fault occurred	BOOL
0x0B	Warning	Get	0 = No Warnings present, 1 = Warning	BOOL
0x0C	FaultRst	Get/Set	0 → 1 Fault Reset	BOOL
0x0D	Fault Code	Get	The fault that caused the last transition to the Faulted state.	UINT16
0x0F	CtrlFromNet	Get	0 = NetControl disabled, 1 = NetControl enabled	BOOL
0x11	Force Fault	Get/Set	0 → 1 Force a fault	BOOL
0x12	Force Status	Get	0 = Not Forced Non-zero = Forced	BOOL

0x14	Net Idle Mode [5]	Get/Set	0 = Stop (default) 1 = Ignore Idle 2 = Imitate communication fault function	USINT

[1] Supported only with assembly instances 20, 21 and 121

[2] Supported only with assembly instances 21 and 121

[3] Supported only with assembly instances 70, 71 and 171

[4] Supported only with assembly instances 71 and 171

[5] Supported only from RETA-01 version 2.05 onwards

AC/DC-Drive Object, Class 0x2A

This object models the functions specific to an AC or DC Drive and is accessible only when using AC/DC Drive profile.

Services Supported

Class services:	Get Attribute Single
Instance services:	Get Attribute Single
	Set Attribute Single

Instance 0x01, Attributes

ID#	Attribute name	Services	Description	Data type
0x03	At Reference	Get	Frequency arrival	BOOL
0x04	NetRef [2)]	Get/Set	Requests torque or speed reference to be local or from the network. 0 = Set Reference not net Control 1 = Set Reference at net Control Note that the actual status of torque or speed reference is reflected in attribute RefFromNet 0x1D (29).	BOOL
0x06	Drive Mode	Get	0 = Vendor specific	UINT8
0x07	Speed Actual	Get	Units RPM/$2^{SpeedScale}$	SINT16
0x08	SpeedRef	Get/Set	Units RPM/$2^{SpeedScale}$	SINT16
0x09	Current Actual	Get	Units 100 msec/$2^{CurrentScale}$	UINT16
0x0A	Power Actual	Get	Units Watts/$2^{PowerScale}$	UINT18
0x0B	Torque Actual	Get	Units Nm/$2^{TorqueScale}$	UINT16
0x12	AccelTime	Get/Set	Units msec/$2^{TimeScale}$	UINT16
0x13	DecelTime	Get/Set	Units msec/$2^{TimeScale}$	UINT16
0x14	Low speed limit	Get/Set	Units RPM/$2^{SpeedScale}$	UINT16
0x15	High speed limit	Get/Set	Units RPM/$2^{SpeedScale}$	UINT16
0x16	Speed Scale	Get/Set	Speed scaling factor	UINT8
0x17	Current Scale	Get/Set	Current scaling factor	UINT8
0x18	Torque Scale	Get/Set	Torque scaling factor	UINT8
0x1A	Power Scale	Get/Set	Power scaling factor	UINT8
0x1B	Voltage Scale	Get/Set	Voltage scaling factor	UINT8
0x1C	Time Scale	Get/Set	Time scaling factor	UINT8
0x1D	Ref From Net	Get		BOOL
0x1F	Field I or IV	Get/Set	Always to be set to 0	-

[2)] Supported only with assembly instance 21

Vendor Specific Object, Class 0x90

The Vendor Specific Object, Class 0x90, enables access of drive parameter and data sets.

Services

Class services:	Get Attribute Single
Instance services:	Get Attribute Single
	Set Attribute Single

To access drive parameters, Instance and Attribute must correspond to the drive parameter Group and Index as follows:

- Instance = parameter Group (1…99)
- Attribute = parameter (1…99)

For example, Parameter 99.01 is accessed when:

- Class = 144 = 0x90
- Instance = 99 = 0x63
- Attribute = 1 = 0x01

Instance 0x01 (Group 1), Attributes

ID#	Attribute name	Services	Description
0x01	Parameter Index	Get/Set	Group 1 Index 1
0x02	Parameter Index	Get/Set	Group 1 Index 2
…			
0x63	Parameter Index	Get/Set	Group 1 Index 99

Instance 0x02 (Group 2), Attributes

ID#	Attribute name	Services	Description
0x01	Parameter Index	Get/Set	Group 2 Index 1
0x02	Parameter Index	Get/Set	Group 2 Index 2
…			
0x63	Parameter Index	Get/Set	Group 2 Index 99

…

Instance 0x63 (Group 99), Attributes

ID#	Attribute name	Services	Description
0x01	Parameter Index	Get/Set	Group 99 Index 1
0x02	Parameter Index	Get/Set	Group 99 Index 2
…			
0x63	Parameter Index	Get/Set	Group 99 Index 99

To access data sets, Instance is always 100. Attribute corresponds to a specific data word. For example, data set 2 word 1 is accessed as follows:

- Class = 144 = 0x90
- Instance = 100 = 0x64
- Attribute = 4 = 0x04

Instance 0x64 (Datasets), Attributes

ID#	Attribute name	Services	Description
0x01	Data word index	Get/Set	Data Set 1 Word 1
0x02	Data word index	Get/Set	Data Set 1 Word 2
0x03	Data word index	Get/Set	Data Set 1 Word 3
0x04	Data word index	Get/Set	Data Set 2 Word 1
0x05	Data word index	Get/Set	Data Set 2 Word 2
0x06	Data word index	Get/Set	Data Set 2 Word 3
0x07	Data word index	Get/Set	Data Set 3 Word 1
…			
0x63	Data word index	Get/Set	Data Set 33 Word 3

Drive IO Map Object, Class 0x91

This is a vendor specific object that is used for mapping data to the User Specific Control assembly instances 102 and 103 and Extended Speed Control plus Drive Parameters assembly instances 121 and 171. Same mapping is used for both of the control assemblies. The active control assembly is selected with the configuration parameter PROTOCOL. Input and Output parameters 1 to 4 correspond to the input and output parameters represented in Table *3. The RETA-01 configuration parameters*. See chapter *Drive configuration*. Maximum of 32 words of Input and Output can be defined in total.

Services Supported

Class services:	Get Attribute Single
	Reset
Instance services:	Get Attribute Single
	Set Attribute Single
	Reset

A reset command to the class will clear mappings in all instances. A reset command to an instance will clear all mappings in that instance. Reset command can be used only when the assembly is not active.

Instance and Attributes

Two instances are supported by Class 0x91:

- Instance 1 for Output parameters
- Instance 2 for Input parameters.

Instance 0x01 (Instances 102 and 121 parameters), Attributes

ID#	Attribute name	Dflt,Min,Max	Description
0x01	Output I/O parameter 1	0,0,32767	UINT16
0x02	Output I/O parameter 2	0,0,32767	UINT16
0x03	Output I/O parameter 3	0,0,32767	UINT16
0x04	Output I/O parameter 4	0,0,32767	UINT16
…			
0x20	Output I/O parameter 32	0,0,32767	UINT16

Instance 0x02 (Instance 103 and 171 parameters), Attributes

ID#	Attribute name	Dflt,Min,Max	Description
0x01	Input I/O parameter 1	0,0,32767	UINT16
0x02	Input I/O parameter 2	0,0,32767	UINT16
0x03	Input I/O parameter 3	0,0,32767	UINT16
0x04	Input I/O parameter 4	0,0,32767	UINT16
…			
0x20	Input I/O parameter 32	0,0,32767	UINT16

Note: Input and Output attributes can also be accessed with RETA-01 configuration parameters 19-26.

Configuration Object, Class 0x92

This object is used to set the Idle action in ABB Drives profile. Most Ethernet/IP masters implement the Run/Idle header and this class was created to be able to define the drive behaviour in Idle mode (RETA-01 version 2.05 onwards).

Services

Class services:	Get Attribute Single
Instance services:	Get Attribute Single
	Set Attribute Single

Class Attributes

#	Name	Services	Description	Dflt,Min,Max	Data type
0x01	Revision	Get	Revision 2	0x0002	UINT

Instance Attributes

#	Name	Services	Description	Dflt,Min,Max	Data type
0x07	Idle Action	Get / Set	0 = Imitate communication fault function 1 = Ignore idle	0, 0, 1	UINT

TCP/IP Interface Object, Class 0xF5

This object provides a mechanism of configuring the TCP/IP settings via EtherNet/IP.

Services

Class services:	Get Attribute All
	Get Attribute Single
Instance services:	Get Attribute All
	Get Attribute Single
	Set Attribute Single

Class Attributes

#	Attribute name	Services	Description	Dflt,Min,Max	Data type
1	Revision	Get	Revision 1	0x0001	UINT

Instance 1 Attributes

ID#	Attribute name	Services	Description	Dflt,Min,Max	Data type
0x01	Status	Get	1 = The interface configuration attribute contains a valid configuration	00000001h, N/A, N/A	DWORD
0x02	Configuration Capability	Get	Interface configuration attribute is adjustable. Capable of obtaining network configuration via DHCP.	00000014h, N/A, N/A	DWORD
0x03	Configuration Control	Get/Set	0 = Configuration from RETA-01 configuration parameters; 2 = Configuration from DHCP	N/A, 0, 2	DWORD
0x04	Physical Link Object	Get	Physical link -> Ethernet object		Array[]
	Path size		2 words	0x0002	UINT
	Path		Ethernet class, Instance 1	20 F6 24 01	Padded EPATH
0x05	Interface Configuration	Get/Set			Array[]
	Current IP address		Module's IP address	N/A, N/A, N/A	UDINT
	Current subnet mask		Module's Network mask	N/A, N/A, N/A	UDINT
	Current gateway address		Module's Gateway address	N/A, N/A, N/A	UDINT
	Not used				
	Not used				
	Default domain name		Default domain name for not fully qualified host names	N/A, N/A, N/A	STRING

0x06	Host Name	Get/Set	Host name of the module	N/A, N/A, N/A	STRING

Ethernet Link Object, Class 0xF6

This object maintains link-specific counters and status information for the Ethernet communication interface.

Services

Class services:	Get Attribute All
	Get Attribute Single
Instance services:	Get Attribute All
	Get Attribute Single

Class Attributes

ID#	Attribute name	Services	Description	Dflt,Min,Max	Data type
0x01	Revision	Get	Revision 1	0001h	UINT

Instance Attributes

ID#	Attribute name	Services	Description	Dflt,Min,Max	Data type
0x01	Interface Speed	Get	10 or 100 Mbps	N/A, N/A, N/A	UDINT
0x02	Interface Flags	Get	–	N/A, N/A, N/A	DWORD
0x03	Physical Address	Get	Ethernet MAC address of the module	N/A, N/A, N/A	Array [6×USINT]

Fault tracing

LED indications

The RETA-01 module is equipped with three diagnostic LEDs. The description of the LEDs is shown below.

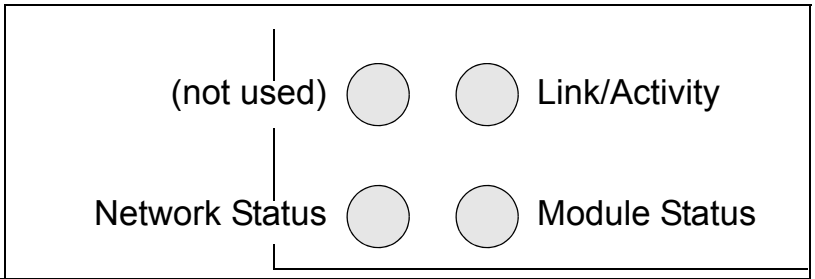

Name	Colour	Function
Link/Activity	Green	**Flashing green** - Module is receiving/transmitting on Ethernet **Steady green** - Module has detected link **Off** - Module cannot detect link
Network Status	Red/ Green	**Flashing red** - *EtherNet/IP:* One or more connections timed out; *Modbus/TCP:* No message has been received within configured time **Steady red** - Duplicate IP address **Flashing green** - Waiting for connections **Steady green** - *EtherNet/IP:* At least one EtherNet/IP connection is open against the module (even to the Message router); *Modbus/ TCP:* At least one Modbus/TCP connection is open against the module
Module Status	Red/ Green	**Flashing red** - Minor fault (e.g. communication with application lost but recoverable) **Steady red** - Major fault (e.g. bad flash, failed memory test, non-recoverable communication problem with host) **Steady green** - Normal operation

Technical data

RETA-01

Enclosure:

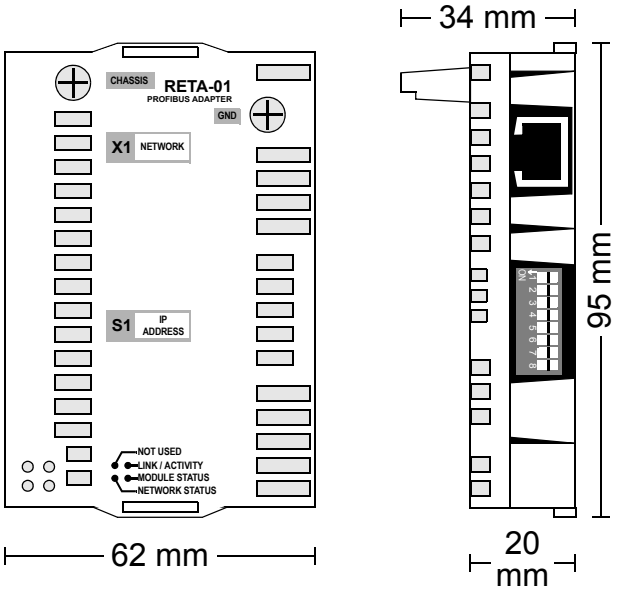

Figure 8. Enclosure of RETA-01

Mounting: Into the option slot on the control board of the drive.

Degree of protection: IP20

Ambient conditions: The applicable ambient conditions specified for the drive in its *Hardware Manual* are in effect.

Settings:

- Parameters (set through the drive)
- 8-way DIP switch for intranet IP address selection

Connectors:

- 34-pin parallel bus connector
- RJ-45 connector

Current consumption:

- 380 mA average (5 V), supplied by the control board of the drive

General:

- Estimated min. lifetime: 100 000 h
- All materials UL/CSA-approved
- Complies with EMC standards EN 50081-2 and EN 50082-2

Ethernet link

Compatible devices: Ethernet standard IEEE 802.3 and 802.3u devices

Medium: 10base-TX or 100base-TX

- Termination: Internal
- Wiring: CAT 5 UTP, CAT 5 FTP* or CAT 5 STP* (*Recommended)
- Connector: RJ-45
- Maximum segment length: 100 m

Topology: Bus, star

Serial communication type: Half and full Duplex

Transfer rate: 10/100 Mbps

Carrier protocol: TCP/IP

Application protocols:

- EtherNet/IP
- Modbus/TCP

3AFE64539736 Rev D / EN
EFFECTIVE: 23.3.2007

ABB Oy
AC Drives
P.O. Box 184
FIN-00381 HELSINKI
FINLAND
Telephone +358 10 22 11
Fax +358 10 22 22681
Internet www.abb.com

ABB Inc.
Automation Technologies
Drives & Motors
16250 West Glendale Drive
New Berlin, WI 53151
USA
Telephone 262 785-3200
800-HELP-365
Fax 262 780-5135

ABB Beijing Drive Systems Co. Ltd.
No. 1, Block D,
A-10 Jiuxianqiao Beilu
Chaoyang District
Beijing, P.R. China, 100015
Telephone +86 10 5821 7788
Fax +86 10 5821 7618
Internet www.abb.com