Atten：Smiling
Mobile/WhatsApp:+86 18050035902
E-mail: info@htechplc.com

**Instruction**
Harmony Series

# Analog Input Module
**IMASI23**



# Preface

The IMASI23 Analog Input Module is a Harmony rack I/O module that is part of the Symphony Enterprise Management and Control System. It has 16 analog input channels that interface isolated thermocouple, millivolt, RTD, and high level analog signals to a controller with an analog-to-digital conversion resolution of 24 bits. Each channel has its own analog-to-digital converter and can be independently configured to handle the desired input type. These analog inputs are used by a controller to monitor and control a process.

The IMASI23 module can be used as a direct replacement for the IMASI03 or IMASI13 modules with only minor modifications. Changes to specification S11 in function code 216 are required to handle the differences in resolution choices. Verification of power supply sizing calculations and system current requirements could be necessary because of the change in power consumption.

This instruction explains the IMASI23 module specifications and operation. It details the procedures necessary to complete setup, installation, maintenance, troubleshooting, and replacement of the module.

# List of Effective Pages

Total number of pages in this instruction is 82, consisting of the following:

| Page No. | Change Date |
|---|---|
| Preface | Original |
| List of Effective Pages | Original |
| iii through ix | Original |
| 1-1 through 1-10 | Original |
| 2-1 through 2-12 | Original |
| 3-1 through 3-7 | Original |
| 4-1 through 4-11 | Original |
| 5-1 through 5-2 | Original |
| 6-1 through 6-9 | Original |
| 7-1 through 7-4 | Original |
| 8-1 | Original |
| A-1 through A-9 | Original |
| B-1 through B-2 | Original |
| C-1 through C-3 | Original |
| Index-1 through Index-3 | Original |

**NOTE:** Changed text or tables are indicated by a vertical bar adjacent to the changed area. Changed figures are indicated by a vertical bar next to the figure caption. The date appears beside the page number.

# Table of Contents


***Section 1 Introduction ..... 1-1***

Overview ..... 1-1
Intended User ..... 1-1
Features ..... 1-1
Instruction Content ..... 1-3
How to Use this Instruction ..... 1-4
Document Conventions ..... 1-5
Glossary of Terms and Abbreviations ..... 1-5
Reference Documents ..... 1-5
Related Nomenclature ..... 1-6
Specifications ..... 1-6

***Section 2 Description and Operation ..... 2-1***

Introduction ..... 2-1
Module Description ..... 2-1
Functional Operation ..... 2-1
Isolated A/D Converter ..... 2-2
Cold Junction Reference ..... 2-2
Digital Input Multiplexer (MUX) ..... 2-3
Microcontroller and Memory ..... 2-3
Switch Settings ..... 2-3
LED Indicators ..... 2-4
I/O Expander Bus ..... 2-4
I/O Expander Bus Interface ..... 2-5
Data Values ..... 2-5
Termination Units ..... 2-5
Function Codes ..... 2-6
Automatic Adjustments and Corrections ..... 2-6
Input Processing ..... 2-6
Point Value Calculation ..... 2-7
Input Calibration ..... 2-7
Cold Junction Compensation ..... 2-7
User Gain and Offset Adjustment ..... 2-8
Engineering Units Conversion ..... 2-8
Automatic Calibration ..... 2-9
Field Calibration ..... 2-9
Diagnostic, Security, and Integrity Checks ..... 2-9
Diagnostics in Diagnostic Mode ..... 2-9
Diagnostics During Normal Operation ..... 2-10
Diagnostics on Reset ..... 2-10
I/O Expander Bus Communication Security ..... 2-10
Open Input Detection ..... 2-10

# Table of Contents (continued)


***Section 2 Description and Operation** (continued)*

Alarm and Exception Reporting ..... 2-11
Online Configuration ..... 2-11
Logic Power ..... 2-11
Mounting Hardware ..... 2-11

***Section 3 Installation ..... 3-1***

Introduction ..... 3-1
Special Handling ..... 3-1
Unpacking and Inspection ..... 3-2
Setup and Installation ..... 3-2
Address Selection Switch (S1) ..... 3-3
Configuring Inputs ..... 3-4
Termination Unit Configuration ..... 3-5
Physical Installation ..... 3-5
Wiring Connections and Cabling ..... 3-6
Wiring ..... 3-6
Cable Connections ..... 3-7

***Section 4 Configuration and Calibration ..... 4-1***

Introduction ..... 4-1
Configuring Inputs ..... 4-1
Configuring Function Codes ..... 4-1
Calibrating Inputs ..... 4-3
Field Calibration ..... 4-4
Procedure ..... 4-6
Test Equipment Required ..... 4-7
Individual Channel Calibration ..... 4-8

***Section 5 Operating Procedures ..... 5-1***

Introduction ..... 5-1
Startup ..... 5-1
Operation ..... 5-1
Status LEDs ..... 5-1

***Section 6 Troubleshooting ..... 6-1***

Introduction ..... 6-1
Status LEDs ..... 6-1
Alarm and Exception Reporting ..... 6-1
Problem Reports ..... 6-1

# Table of Contents (continued)


***Section 6 Troubleshooting** (continued)*

Error Messages and Corrective Actions ..... 6-3
Input Channel Status ..... 6-3
Analog Input Module Errors ..... 6-4
Error Example ..... 6-6
I/O Expander Bus Interface Test ..... 6-7
Module Pin Connections ..... 6-7

***Section 7 Maintenance ..... 7-1***

Introduction ..... 7-1
Preventive Maintenance Schedule ..... 7-1
Equipment and Tools Required ..... 7-2
Preventive Maintenance Procedures ..... 7-2
Printed Circuit Board Cleaning ..... 7-3
General Cleaning and Washing ..... 7-3
Edge Connector Cleaning ..... 7-3
Checking Connections ..... 7-4

***Section 8 Repair and Replacement ..... 8-1***

Introduction ..... 8-1
Module Repair and Replacement ..... 8-1

***Appendix A NTAI06 Termination Unit ..... A-1***

Introduction ..... A-1
Cold Junction Reference Input ..... A-1
Configuring Inputs ..... A-1

***Appendix B Replacing an IMASI13 Module ..... B-1***

Introduction ..... B-1
User Differences ..... B-1
Power Consumption Comparison ..... B-2

***Appendix C Replacing an IMASI03 Module ..... C-1***

Introduction ..... C-1
User Differences ..... C-1
Function Code 216 Modifications ..... C-2
Power Consumption Comparison ..... C-3

# List of Figures


| No. | Title | Page |
|---|---|---|
| 1-1. | Harmony Rack I/O Architecture | 1-2 |
| 2-1. | IMASI23 Functional Block Diagram | 2-2 |
| 2-2. | Mounting Hardware | 2-12 |
| 3-1. | Module Layout | 3-3 |
| 3-2. | S1 Switch | 3-4 |
| 3-3. | Six Pin Jumper Block Configurations | 3-5 |
| 3-4. | Latched and Un-Latched Positions of Captive Latches | 3-6 |
| 3-5. | Cable Connections | 3-7 |
| A-1. | NTAI06 Layout (Rev A Hardware) | A-2 |
| A-2. | NTAI06 Layout (Rev B Hardware) | A-3 |
| A-3. | NTAI06 Input Circuit | A-6 |
| A-4. | NTAI06 Field Input Termination Examples | A-7 |
| A-5. | IMASI23 Input Examples | A-8 |
| A-6. | NTAI06 Cable Connection | A-9 |
| B-1. | IMASI13 Four Pin Jumper Block Configuration | B-1 |
| B-2. | IMASI23 Six Pin Jumper Block Configuration | B-1 |
| C-1. | IMASI03 Three Pin Jumper Locations | C-2 |
| C-2. | IMASI23 Six Pin Jumper Block Configuration | C-2 |


# List of Tables


| No. | Title | Page |
|---|---|---|
| 1-1. | Glossary of Terms and Abbreviations | 1-5 |
| 1-2. | Reference Documents | 1-6 |
| 1-3. | Related Nomenclature | 1-6 |
| 1-4. | Specifications | 1-6 |
| 3-1. | Sample Address Switch Settings (S1) | 3-4 |
| 6-1. | IMASI23 Error Types | 6-2 |
| 6-2. | Module Status (Byte 3) Error Codes | 6-4 |
| 6-3. | P1 Power Connections | 6-8 |
| 6-4. | P2 Expander Bus Connections | 6-8 |
| 6-5. | P3 Input Signal Connections | 6-9 |
| 7-1. | Preventive Maintenance Schedule | 7-2 |
| A-1. | NTAI06 Input Types | A-3 |
| A-2. | NTAI06 Jumper Configurations | A-4 |
| A-3. | NTAI06 Input Type Descriptions | A-4 |
| C-1. | IMASI03 Jumpers Used for Each Channel | C-1 |

# Safety Summary






**Electrostatic Sensitive Device**
Devices labeled with this symbol require special handling precautions as described in the installation section.

**GENERAL WARNINGS**

**Equipment Environment**
All components, whether in transportation, operation or storage, must be in a noncorrosive environment.

**Electrical Shock Hazard During Maintenance**
Disconnect power or take precautions to insure that contact with energized parts is avoided when servicing.

**SPECIFIC WARNINGS**

Disconnect power before installing dipshunts on the MMU backplane. Failure to do so will result in contact with cabinet areas that could cause severe or fatal shock. (p. 3-5)

Disconnect power from the source or take precautions to ensure that contact with energized parts is avoided when performing these procedures. Failure to follow this warning constitutes an electrical shock hazard that can injure personnel and damage equipment. (p. 7-2)

Wear eye protection whenever working with cleaning solvents. When removing solvents from printed circuit boards using compressed air, injury to the eyes could result from splashing solvent as it is removed from the printed circuit board. (p. 7-2)

There are exposed AC and DC connections inside the cabinet. These exposed electrical connections present a shock hazard that can cause injury or death. (p. 7-4)

If input or output circuits are a shock hazard after disconnecting system power at the power entry panel, then the door of the cabinet containing these externally powered circuits must be marked with a warning stating that multiple power sources exist. (p. 7-4)

# Support Services

ABB will provide assistance in the operation and repair of its products. Requests for sales or application services should be made to your nearest sales or service office. ABB can also provide installation, repair and maintenance contract services.

When ordering parts, use nomenclature or part numbers and part descriptions from equipment manuals. Parts without a description must be ordered from the nearest sales or service office. Recommended spare parts lists, including prices are available through the nearest sales or service office.

ABB has modern training facilities available for training your personnel. On-site training is also available. Contact your nearest ABB sales office for specific information and scheduling.

Additional copies of this instruction, or other instructions, can be obtained from the nearest ABB sales office at a reasonable charge.

# Trademarks and Registrations



Registrations and trademarks used in this document include:

| | |
|---|---|
| ™ Composer | Trademark of ABB Automation Inc. |
| ® INFI 90 | Registered trademark of ABB Automation Inc. |

# Preface

The IMASI23 Analog Input Module is a Harmony rack I/O module that is part of the Symphony Enterprise Management and Control System. It has 16 analog input channels that interface isolated thermocouple, millivolt, RTD, and high level analog signals to a controller with an analog-to-digital conversion resolution of 24 bits. Each channel has its own analog-to-digital converter and can be independently configured to handle the desired input type. These analog inputs are used by a controller to monitor and control a process.

The IMASI23 module can be used as a direct replacement for the IMASI03 or IMASI13 modules with only minor modifications. Changes to specification S11 in function code 216 are required to handle the differences in resolution choices. Verification of power supply sizing calculations and system current requirements could be necessary because of the change in power consumption.

This instruction explains the IMASI23 module specifications and operation. It details the procedures necessary to complete setup, installation, maintenance, troubleshooting, and replacement of the module.

# List of Effective Pages

Total number of pages in this instruction is 82, consisting of the following:

| Page No. | Change Date |
|---|---|
| Preface | Original |
| List of Effective Pages | Original |
| iii through ix | Original |
| 1-1 through 1-10 | Original |
| 2-1 through 2-12 | Original |
| 3-1 through 3-7 | Original |
| 4-1 through 4-11 | Original |
| 5-1 through 5-2 | Original |
| 6-1 through 6-9 | Original |
| 7-1 through 7-4 | Original |
| 8-1 | Original |
| A-1 through A-9 | Original |
| B-1 through B-2 | Original |
| C-1 through C-3 | Original |
| Index-1 through Index-3 | Original |

**NOTE:** Changed text or tables are indicated by a vertical bar adjacent to the changed area. Changed figures are indicated by a vertical bar next to the figure caption. The date appears beside the page number.

# Table of Contents


***Section 1 Introduction ..... 1-1***

Overview ..... 1-1
Intended User ..... 1-1
Features ..... 1-1
Instruction Content ..... 1-3
How to Use this Instruction ..... 1-4
Document Conventions ..... 1-5
Glossary of Terms and Abbreviations ..... 1-5
Reference Documents ..... 1-5
Related Nomenclature ..... 1-6
Specifications ..... 1-6

***Section 2 Description and Operation ..... 2-1***

Introduction ..... 2-1
Module Description ..... 2-1
Functional Operation ..... 2-1
Isolated A/D Converter ..... 2-2
Cold Junction Reference ..... 2-2
Digital Input Multiplexer (MUX) ..... 2-3
Microcontroller and Memory ..... 2-3
Switch Settings ..... 2-3
LED Indicators ..... 2-4
I/O Expander Bus ..... 2-4
I/O Expander Bus Interface ..... 2-5
Data Values ..... 2-5
Termination Units ..... 2-5
Function Codes ..... 2-6
Automatic Adjustments and Corrections ..... 2-6
Input Processing ..... 2-6
Point Value Calculation ..... 2-7
Input Calibration ..... 2-7
Cold Junction Compensation ..... 2-7
User Gain and Offset Adjustment ..... 2-8
Engineering Units Conversion ..... 2-8
Automatic Calibration ..... 2-9
Field Calibration ..... 2-9
Diagnostic, Security, and Integrity Checks ..... 2-9
Diagnostics in Diagnostic Mode ..... 2-9
Diagnostics During Normal Operation ..... 2-10
Diagnostics on Reset ..... 2-10
I/O Expander Bus Communication Security ..... 2-10
Open Input Detection ..... 2-10

# Table of Contents (continued)


***Section 2 Description and Operation** (continued)*

Alarm and Exception Reporting ..... 2-11
Online Configuration ..... 2-11
Logic Power ..... 2-11
Mounting Hardware ..... 2-11

***Section 3 Installation ..... 3-1***

Introduction ..... 3-1
Special Handling ..... 3-1
Unpacking and Inspection ..... 3-2
Setup and Installation ..... 3-2
Address Selection Switch (S1) ..... 3-3
Configuring Inputs ..... 3-4
Termination Unit Configuration ..... 3-5
Physical Installation ..... 3-5
Wiring Connections and Cabling ..... 3-6
Wiring ..... 3-6
Cable Connections ..... 3-7

***Section 4 Configuration and Calibration ..... 4-1***

Introduction ..... 4-1
Configuring Inputs ..... 4-1
Configuring Function Codes ..... 4-1
Calibrating Inputs ..... 4-3
Field Calibration ..... 4-4
Procedure ..... 4-6
Test Equipment Required ..... 4-7
Individual Channel Calibration ..... 4-8

***Section 5 Operating Procedures ..... 5-1***

Introduction ..... 5-1
Startup ..... 5-1
Operation ..... 5-1
Status LEDs ..... 5-1

***Section 6 Troubleshooting ..... 6-1***

Introduction ..... 6-1
Status LEDs ..... 6-1
Alarm and Exception Reporting ..... 6-1
Problem Reports ..... 6-1

# Table of Contents (continued)


***Section 6 Troubleshooting** (continued)*

Error Messages and Corrective Actions ..... 6-3
Input Channel Status ..... 6-3
Analog Input Module Errors ..... 6-4
Error Example ..... 6-6
I/O Expander Bus Interface Test ..... 6-7
Module Pin Connections ..... 6-7

***Section 7 Maintenance ..... 7-1***

Introduction ..... 7-1
Preventive Maintenance Schedule ..... 7-1
Equipment and Tools Required ..... 7-2
Preventive Maintenance Procedures ..... 7-2
Printed Circuit Board Cleaning ..... 7-3
General Cleaning and Washing ..... 7-3
Edge Connector Cleaning ..... 7-3
Checking Connections ..... 7-4

***Section 8 Repair and Replacement ..... 8-1***

Introduction ..... 8-1
Module Repair and Replacement ..... 8-1

***Appendix A NTAI06 Termination Unit ..... A-1***

Introduction ..... A-1
Cold Junction Reference Input ..... A-1
Configuring Inputs ..... A-1

***Appendix B Replacing an IMASI13 Module ..... B-1***

Introduction ..... B-1
User Differences ..... B-1
Power Consumption Comparison ..... B-2

***Appendix C Replacing an IMASI03 Module ..... C-1***

Introduction ..... C-1
User Differences ..... C-1
Function Code 216 Modifications ..... C-2
Power Consumption Comparison ..... C-3

# List of Figures


| No. | Title | Page |
|---|---|---|
| 1-1. | Harmony Rack I/O Architecture | 1-2 |
| 2-1. | IMASI23 Functional Block Diagram | 2-2 |
| 2-2. | Mounting Hardware | 2-12 |
| 3-1. | Module Layout | 3-3 |
| 3-2. | S1 Switch | 3-4 |
| 3-3. | Six Pin Jumper Block Configurations | 3-5 |
| 3-4. | Latched and Un-Latched Positions of Captive Latches | 3-6 |
| 3-5. | Cable Connections | 3-7 |
| A-1. | NTAI06 Layout (Rev A Hardware) | A-2 |
| A-2. | NTAI06 Layout (Rev B Hardware) | A-3 |
| A-3. | NTAI06 Input Circuit | A-6 |
| A-4. | NTAI06 Field Input Termination Examples | A-7 |
| A-5. | IMASI23 Input Examples | A-8 |
| A-6. | NTAI06 Cable Connection | A-9 |
| B-1. | IMASI13 Four Pin Jumper Block Configuration | B-1 |
| B-2. | IMASI23 Six Pin Jumper Block Configuration | B-1 |
| C-1. | IMASI03 Three Pin Jumper Locations | C-2 |
| C-2. | IMASI23 Six Pin Jumper Block Configuration | C-2 |


# List of Tables


| No. | Title | Page |
|---|---|---|
| 1-1. | Glossary of Terms and Abbreviations | 1-5 |
| 1-2. | Reference Documents | 1-6 |
| 1-3. | Related Nomenclature | 1-6 |
| 1-4. | Specifications | 1-6 |
| 3-1. | Sample Address Switch Settings (S1) | 3-4 |
| 6-1. | IMASI23 Error Types | 6-2 |
| 6-2. | Module Status (Byte 3) Error Codes | 6-4 |
| 6-3. | P1 Power Connections | 6-8 |
| 6-4. | P2 Expander Bus Connections | 6-8 |
| 6-5. | P3 Input Signal Connections | 6-9 |
| 7-1. | Preventive Maintenance Schedule | 7-2 |
| A-1. | NTAI06 Input Types | A-3 |
| A-2. | NTAI06 Jumper Configurations | A-4 |
| A-3. | NTAI06 Input Type Descriptions | A-4 |
| C-1. | IMASI03 Jumpers Used for Each Channel | C-1 |

# Safety Summary






**Electrostatic Sensitive Device**
Devices labeled with this symbol require special handling precautions as described in the installation section.

**GENERAL WARNINGS**

**Equipment Environment**
All components, whether in transportation, operation or storage, must be in a noncorrosive environment.

**Electrical Shock Hazard During Maintenance**
Disconnect power or take precautions to insure that contact with energized parts is avoided when servicing.

**SPECIFIC WARNINGS**

Disconnect power before installing dipshunts on the MMU backplane. Failure to do so will result in contact with cabinet areas that could cause severe or fatal shock. (p. 3-5)

Disconnect power from the source or take precautions to ensure that contact with energized parts is avoided when performing these procedures. Failure to follow this warning constitutes an electrical shock hazard that can injure personnel and damage equipment. (p. 7-2)

Wear eye protection whenever working with cleaning solvents. When removing solvents from printed circuit boards using compressed air, injury to the eyes could result from splashing solvent as it is removed from the printed circuit board. (p. 7-2)

There are exposed AC and DC connections inside the cabinet. These exposed electrical connections present a shock hazard that can cause injury or death. (p. 7-4)

If input or output circuits are a shock hazard after disconnecting system power at the power entry panel, then the door of the cabinet containing these externally powered circuits must be marked with a warning stating that multiple power sources exist. (p. 7-4)

# Support Services

ABB will provide assistance in the operation and repair of its products. Requests for sales or application services should be made to your nearest sales or service office. ABB can also provide installation, repair and maintenance contract services.

When ordering parts, use nomenclature or part numbers and part descriptions from equipment manuals. Parts without a description must be ordered from the nearest sales or service office. Recommended spare parts lists, including prices are available through the nearest sales or service office.

ABB has modern training facilities available for training your personnel. On-site training is also available. Contact your nearest ABB sales office for specific information and scheduling.

Additional copies of this instruction, or other instructions, can be obtained from the nearest ABB sales office at a reasonable charge.

# Trademarks and Registrations



Registrations and trademarks used in this document include:

| | |
|---|---|
| ™ Composer | Trademark of ABB Automation Inc. |
| ® INFI 90 | Registered trademark of ABB Automation Inc. |

# Preface

The IMASI23 Analog Input Module is a Harmony rack I/O module that is part of the Symphony Enterprise Management and Control System. It has 16 analog input channels that interface isolated thermocouple, millivolt, RTD, and high level analog signals to a controller with an analog-to-digital conversion resolution of 24 bits. Each channel has its own analog-to-digital converter and can be independently configured to handle the desired input type. These analog inputs are used by a controller to monitor and control a process.

The IMASI23 module can be used as a direct replacement for the IMASI03 or IMASI13 modules with only minor modifications. Changes to specification S11 in function code 216 are required to handle the differences in resolution choices. Verification of power supply sizing calculations and system current requirements could be necessary because of the change in power consumption.

This instruction explains the IMASI23 module specifications and operation. It details the procedures necessary to complete setup, installation, maintenance, troubleshooting, and replacement of the module.

# List of Effective Pages

Total number of pages in this instruction is 82, consisting of the following:

| Page No. | Change Date |
|---|---|
| Preface | Original |
| List of Effective Pages | Original |
| iii through ix | Original |
| 1-1 through 1-10 | Original |
| 2-1 through 2-12 | Original |
| 3-1 through 3-7 | Original |
| 4-1 through 4-11 | Original |
| 5-1 through 5-2 | Original |
| 6-1 through 6-9 | Original |
| 7-1 through 7-4 | Original |
| 8-1 | Original |
| A-1 through A-9 | Original |
| B-1 through B-2 | Original |
| C-1 through C-3 | Original |
| Index-1 through Index-3 | Original |

**NOTE:** Changed text or tables are indicated by a vertical bar adjacent to the changed area. Changed figures are indicated by a vertical bar next to the figure caption. The date appears beside the page number.

# Table of Contents


***Section 1 Introduction ..... 1-1***

Overview ..... 1-1
Intended User ..... 1-1
Features ..... 1-1
Instruction Content ..... 1-3
How to Use this Instruction ..... 1-4
Document Conventions ..... 1-5
Glossary of Terms and Abbreviations ..... 1-5
Reference Documents ..... 1-5
Related Nomenclature ..... 1-6
Specifications ..... 1-6

***Section 2 Description and Operation ..... 2-1***

Introduction ..... 2-1
Module Description ..... 2-1
Functional Operation ..... 2-1
Isolated A/D Converter ..... 2-2
Cold Junction Reference ..... 2-2
Digital Input Multiplexer (MUX) ..... 2-3
Microcontroller and Memory ..... 2-3
Switch Settings ..... 2-3
LED Indicators ..... 2-4
I/O Expander Bus ..... 2-4
I/O Expander Bus Interface ..... 2-5
Data Values ..... 2-5
Termination Units ..... 2-5
Function Codes ..... 2-6
Automatic Adjustments and Corrections ..... 2-6
Input Processing ..... 2-6
Point Value Calculation ..... 2-7
Input Calibration ..... 2-7
Cold Junction Compensation ..... 2-7
User Gain and Offset Adjustment ..... 2-8
Engineering Units Conversion ..... 2-8
Automatic Calibration ..... 2-9
Field Calibration ..... 2-9
Diagnostic, Security, and Integrity Checks ..... 2-9
Diagnostics in Diagnostic Mode ..... 2-9
Diagnostics During Normal Operation ..... 2-10
Diagnostics on Reset ..... 2-10
I/O Expander Bus Communication Security ..... 2-10
Open Input Detection ..... 2-10

# Table of Contents (continued)


***Section 2 Description and Operation** (continued)*

Alarm and Exception Reporting ..... 2-11
Online Configuration ..... 2-11
Logic Power ..... 2-11
Mounting Hardware ..... 2-11

***Section 3 Installation ..... 3-1***

Introduction ..... 3-1
Special Handling ..... 3-1
Unpacking and Inspection ..... 3-2
Setup and Installation ..... 3-2
Address Selection Switch (S1) ..... 3-3
Configuring Inputs ..... 3-4
Termination Unit Configuration ..... 3-5
Physical Installation ..... 3-5
Wiring Connections and Cabling ..... 3-6
Wiring ..... 3-6
Cable Connections ..... 3-7

***Section 4 Configuration and Calibration ..... 4-1***

Introduction ..... 4-1
Configuring Inputs ..... 4-1
Configuring Function Codes ..... 4-1
Calibrating Inputs ..... 4-3
Field Calibration ..... 4-4
Procedure ..... 4-6
Test Equipment Required ..... 4-7
Individual Channel Calibration ..... 4-8

***Section 5 Operating Procedures ..... 5-1***

Introduction ..... 5-1
Startup ..... 5-1
Operation ..... 5-1
Status LEDs ..... 5-1

***Section 6 Troubleshooting ..... 6-1***

Introduction ..... 6-1
Status LEDs ..... 6-1
Alarm and Exception Reporting ..... 6-1
Problem Reports ..... 6-1

# Table of Contents (continued)


***Section 6 Troubleshooting** (continued)*

Error Messages and Corrective Actions ..... 6-3
Input Channel Status ..... 6-3
Analog Input Module Errors ..... 6-4
Error Example ..... 6-6
I/O Expander Bus Interface Test ..... 6-7
Module Pin Connections ..... 6-7

***Section 7 Maintenance ..... 7-1***

Introduction ..... 7-1
Preventive Maintenance Schedule ..... 7-1
Equipment and Tools Required ..... 7-2
Preventive Maintenance Procedures ..... 7-2
Printed Circuit Board Cleaning ..... 7-3
General Cleaning and Washing ..... 7-3
Edge Connector Cleaning ..... 7-3
Checking Connections ..... 7-4

***Section 8 Repair and Replacement ..... 8-1***

Introduction ..... 8-1
Module Repair and Replacement ..... 8-1

***Appendix A NTAI06 Termination Unit ..... A-1***

Introduction ..... A-1
Cold Junction Reference Input ..... A-1
Configuring Inputs ..... A-1

***Appendix B Replacing an IMASI13 Module ..... B-1***

Introduction ..... B-1
User Differences ..... B-1
Power Consumption Comparison ..... B-2

***Appendix C Replacing an IMASI03 Module ..... C-1***

Introduction ..... C-1
User Differences ..... C-1
Function Code 216 Modifications ..... C-2
Power Consumption Comparison ..... C-3

# List of Figures


| No. | Title | Page |
|---|---|---|
| 1-1. | Harmony Rack I/O Architecture | 1-2 |
| 2-1. | IMASI23 Functional Block Diagram | 2-2 |
| 2-2. | Mounting Hardware | 2-12 |
| 3-1. | Module Layout | 3-3 |
| 3-2. | S1 Switch | 3-4 |
| 3-3. | Six Pin Jumper Block Configurations | 3-5 |
| 3-4. | Latched and Un-Latched Positions of Captive Latches | 3-6 |
| 3-5. | Cable Connections | 3-7 |
| A-1. | NTAI06 Layout (Rev A Hardware) | A-2 |
| A-2. | NTAI06 Layout (Rev B Hardware) | A-3 |
| A-3. | NTAI06 Input Circuit | A-6 |
| A-4. | NTAI06 Field Input Termination Examples | A-7 |
| A-5. | IMASI23 Input Examples | A-8 |
| A-6. | NTAI06 Cable Connection | A-9 |
| B-1. | IMASI13 Four Pin Jumper Block Configuration | B-1 |
| B-2. | IMASI23 Six Pin Jumper Block Configuration | B-1 |
| C-1. | IMASI03 Three Pin Jumper Locations | C-2 |
| C-2. | IMASI23 Six Pin Jumper Block Configuration | C-2 |


# List of Tables


| No. | Title | Page |
|---|---|---|
| 1-1. | Glossary of Terms and Abbreviations | 1-5 |
| 1-2. | Reference Documents | 1-6 |
| 1-3. | Related Nomenclature | 1-6 |
| 1-4. | Specifications | 1-6 |
| 3-1. | Sample Address Switch Settings (S1) | 3-4 |
| 6-1. | IMASI23 Error Types | 6-2 |
| 6-2. | Module Status (Byte 3) Error Codes | 6-4 |
| 6-3. | P1 Power Connections | 6-8 |
| 6-4. | P2 Expander Bus Connections | 6-8 |
| 6-5. | P3 Input Signal Connections | 6-9 |
| 7-1. | Preventive Maintenance Schedule | 7-2 |
| A-1. | NTAI06 Input Types | A-3 |
| A-2. | NTAI06 Jumper Configurations | A-4 |
| A-3. | NTAI06 Input Type Descriptions | A-4 |
| C-1. | IMASI03 Jumpers Used for Each Channel | C-1 |

# Safety Summary






**Electrostatic Sensitive Device**
Devices labeled with this symbol require special handling precautions as described in the installation section.

**GENERAL WARNINGS**

**Equipment Environment**
All components, whether in transportation, operation or storage, must be in a noncorrosive environment.

**Electrical Shock Hazard During Maintenance**
Disconnect power or take precautions to insure that contact with energized parts is avoided when servicing.

**SPECIFIC WARNINGS**

Disconnect power before installing dipshunts on the MMU backplane. Failure to do so will result in contact with cabinet areas that could cause severe or fatal shock. (p. 3-5)

Disconnect power from the source or take precautions to ensure that contact with energized parts is avoided when performing these procedures. Failure to follow this warning constitutes an electrical shock hazard that can injure personnel and damage equipment. (p. 7-2)

Wear eye protection whenever working with cleaning solvents. When removing solvents from printed circuit boards using compressed air, injury to the eyes could result from splashing solvent as it is removed from the printed circuit board. (p. 7-2)

There are exposed AC and DC connections inside the cabinet. These exposed electrical connections present a shock hazard that can cause injury or death. (p. 7-4)

If input or output circuits are a shock hazard after disconnecting system power at the power entry panel, then the door of the cabinet containing these externally powered circuits must be marked with a warning stating that multiple power sources exist. (p. 7-4)

# Support Services

ABB will provide assistance in the operation and repair of its products. Requests for sales or application services should be made to your nearest sales or service office. ABB can also provide installation, repair and maintenance contract services.

When ordering parts, use nomenclature or part numbers and part descriptions from equipment manuals. Parts without a description must be ordered from the nearest sales or service office. Recommended spare parts lists, including prices are available through the nearest sales or service office.

ABB has modern training facilities available for training your personnel. On-site training is also available. Contact your nearest ABB sales office for specific information and scheduling.

Additional copies of this instruction, or other instructions, can be obtained from the nearest ABB sales office at a reasonable charge.

# Trademarks and Registrations



Registrations and trademarks used in this document include:

| | |
|---|---|
| ™ Composer | Trademark of ABB Automation Inc. |
| ® INFI 90 | Registered trademark of ABB Automation Inc. |

# Preface

The IMASI23 Analog Input Module is a Harmony rack I/O module that is part of the Symphony Enterprise Management and Control System. It has 16 analog input channels that interface isolated thermocouple, millivolt, RTD, and high level analog signals to a controller with an analog-to-digital conversion resolution of 24 bits. Each channel has its own analog-to-digital converter and can be independently configured to handle the desired input type. These analog inputs are used by a controller to monitor and control a process.

The IMASI23 module can be used as a direct replacement for the IMASI03 or IMASI13 modules with only minor modifications. Changes to specification S11 in function code 216 are required to handle the differences in resolution choices. Verification of power supply sizing calculations and system current requirements could be necessary because of the change in power consumption.

This instruction explains the IMASI23 module specifications and operation. It details the procedures necessary to complete setup, installation, maintenance, troubleshooting, and replacement of the module.

# List of Effective Pages

Total number of pages in this instruction is 82, consisting of the following:

| Page No. | Change Date |
|---|---|
| Preface | Original |
| List of Effective Pages | Original |
| iii through ix | Original |
| 1-1 through 1-10 | Original |
| 2-1 through 2-12 | Original |
| 3-1 through 3-7 | Original |
| 4-1 through 4-11 | Original |
| 5-1 through 5-2 | Original |
| 6-1 through 6-9 | Original |
| 7-1 through 7-4 | Original |
| 8-1 | Original |
| A-1 through A-9 | Original |
| B-1 through B-2 | Original |
| C-1 through C-3 | Original |
| Index-1 through Index-3 | Original |

**NOTE:** Changed text or tables are indicated by a vertical bar adjacent to the changed area. Changed figures are indicated by a vertical bar next to the figure caption. The date appears beside the page number.

# Table of Contents


***Section 1 Introduction ..... 1-1***

Overview ..... 1-1
Intended User ..... 1-1
Features ..... 1-1
Instruction Content ..... 1-3
How to Use this Instruction ..... 1-4
Document Conventions ..... 1-5
Glossary of Terms and Abbreviations ..... 1-5
Reference Documents ..... 1-5
Related Nomenclature ..... 1-6
Specifications ..... 1-6

***Section 2 Description and Operation ..... 2-1***

Introduction ..... 2-1
Module Description ..... 2-1
Functional Operation ..... 2-1
Isolated A/D Converter ..... 2-2
Cold Junction Reference ..... 2-2
Digital Input Multiplexer (MUX) ..... 2-3
Microcontroller and Memory ..... 2-3
Switch Settings ..... 2-3
LED Indicators ..... 2-4
I/O Expander Bus ..... 2-4
I/O Expander Bus Interface ..... 2-5
Data Values ..... 2-5
Termination Units ..... 2-5
Function Codes ..... 2-6
Automatic Adjustments and Corrections ..... 2-6
Input Processing ..... 2-6
Point Value Calculation ..... 2-7
Input Calibration ..... 2-7
Cold Junction Compensation ..... 2-7
User Gain and Offset Adjustment ..... 2-8
Engineering Units Conversion ..... 2-8
Automatic Calibration ..... 2-9
Field Calibration ..... 2-9
Diagnostic, Security, and Integrity Checks ..... 2-9
Diagnostics in Diagnostic Mode ..... 2-9
Diagnostics During Normal Operation ..... 2-10
Diagnostics on Reset ..... 2-10
I/O Expander Bus Communication Security ..... 2-10
Open Input Detection ..... 2-10

# Table of Contents (continued)


***Section 2 Description and Operation** (continued)*

Alarm and Exception Reporting ..... 2-11
Online Configuration ..... 2-11
Logic Power ..... 2-11
Mounting Hardware ..... 2-11

***Section 3 Installation ..... 3-1***

Introduction ..... 3-1
Special Handling ..... 3-1
Unpacking and Inspection ..... 3-2
Setup and Installation ..... 3-2
Address Selection Switch (S1) ..... 3-3
Configuring Inputs ..... 3-4
Termination Unit Configuration ..... 3-5
Physical Installation ..... 3-5
Wiring Connections and Cabling ..... 3-6
Wiring ..... 3-6
Cable Connections ..... 3-7

***Section 4 Configuration and Calibration ..... 4-1***

Introduction ..... 4-1
Configuring Inputs ..... 4-1
Configuring Function Codes ..... 4-1
Calibrating Inputs ..... 4-3
Field Calibration ..... 4-4
Procedure ..... 4-6
Test Equipment Required ..... 4-7
Individual Channel Calibration ..... 4-8

***Section 5 Operating Procedures ..... 5-1***

Introduction ..... 5-1
Startup ..... 5-1
Operation ..... 5-1
Status LEDs ..... 5-1

***Section 6 Troubleshooting ..... 6-1***

Introduction ..... 6-1
Status LEDs ..... 6-1
Alarm and Exception Reporting ..... 6-1
Problem Reports ..... 6-1

# Table of Contents (continued)


***Section 6 Troubleshooting** (continued)*

Error Messages and Corrective Actions ..... 6-3
Input Channel Status ..... 6-3
Analog Input Module Errors ..... 6-4
Error Example ..... 6-6
I/O Expander Bus Interface Test ..... 6-7
Module Pin Connections ..... 6-7

***Section 7 Maintenance ..... 7-1***

Introduction ..... 7-1
Preventive Maintenance Schedule ..... 7-1
Equipment and Tools Required ..... 7-2
Preventive Maintenance Procedures ..... 7-2
Printed Circuit Board Cleaning ..... 7-3
General Cleaning and Washing ..... 7-3
Edge Connector Cleaning ..... 7-3
Checking Connections ..... 7-4

***Section 8 Repair and Replacement ..... 8-1***

Introduction ..... 8-1
Module Repair and Replacement ..... 8-1

***Appendix A NTAI06 Termination Unit ..... A-1***

Introduction ..... A-1
Cold Junction Reference Input ..... A-1
Configuring Inputs ..... A-1

***Appendix B Replacing an IMASI13 Module ..... B-1***

Introduction ..... B-1
User Differences ..... B-1
Power Consumption Comparison ..... B-2

***Appendix C Replacing an IMASI03 Module ..... C-1***

Introduction ..... C-1
User Differences ..... C-1
Function Code 216 Modifications ..... C-2
Power Consumption Comparison ..... C-3

# List of Figures


| No. | Title | Page |
|---|---|---|
| 1-1. | Harmony Rack I/O Architecture | 1-2 |
| 2-1. | IMASI23 Functional Block Diagram | 2-2 |
| 2-2. | Mounting Hardware | 2-12 |
| 3-1. | Module Layout | 3-3 |
| 3-2. | S1 Switch | 3-4 |
| 3-3. | Six Pin Jumper Block Configurations | 3-5 |
| 3-4. | Latched and Un-Latched Positions of Captive Latches | 3-6 |
| 3-5. | Cable Connections | 3-7 |
| A-1. | NTAI06 Layout (Rev A Hardware) | A-2 |
| A-2. | NTAI06 Layout (Rev B Hardware) | A-3 |
| A-3. | NTAI06 Input Circuit | A-6 |
| A-4. | NTAI06 Field Input Termination Examples | A-7 |
| A-5. | IMASI23 Input Examples | A-8 |
| A-6. | NTAI06 Cable Connection | A-9 |
| B-1. | IMASI13 Four Pin Jumper Block Configuration | B-1 |
| B-2. | IMASI23 Six Pin Jumper Block Configuration | B-1 |
| C-1. | IMASI03 Three Pin Jumper Locations | C-2 |
| C-2. | IMASI23 Six Pin Jumper Block Configuration | C-2 |


# List of Tables


| No. | Title | Page |
|---|---|---|
| 1-1. | Glossary of Terms and Abbreviations | 1-5 |
| 1-2. | Reference Documents | 1-6 |
| 1-3. | Related Nomenclature | 1-6 |
| 1-4. | Specifications | 1-6 |
| 3-1. | Sample Address Switch Settings (S1) | 3-4 |
| 6-1. | IMASI23 Error Types | 6-2 |
| 6-2. | Module Status (Byte 3) Error Codes | 6-4 |
| 6-3. | P1 Power Connections | 6-8 |
| 6-4. | P2 Expander Bus Connections | 6-8 |
| 6-5. | P3 Input Signal Connections | 6-9 |
| 7-1. | Preventive Maintenance Schedule | 7-2 |
| A-1. | NTAI06 Input Types | A-3 |
| A-2. | NTAI06 Jumper Configurations | A-4 |
| A-3. | NTAI06 Input Type Descriptions | A-4 |
| C-1. | IMASI03 Jumpers Used for Each Channel | C-1 |

# Safety Summary






**Electrostatic Sensitive Device**
Devices labeled with this symbol require special handling precautions as described in the installation section.

**GENERAL WARNINGS**

**Equipment Environment**
All components, whether in transportation, operation or storage, must be in a noncorrosive environment.

**Electrical Shock Hazard During Maintenance**
Disconnect power or take precautions to insure that contact with energized parts is avoided when servicing.

**SPECIFIC WARNINGS**

Disconnect power before installing dipshunts on the MMU backplane. Failure to do so will result in contact with cabinet areas that could cause severe or fatal shock. (p. 3-5)

Disconnect power from the source or take precautions to ensure that contact with energized parts is avoided when performing these procedures. Failure to follow this warning constitutes an electrical shock hazard that can injure personnel and damage equipment. (p. 7-2)

Wear eye protection whenever working with cleaning solvents. When removing solvents from printed circuit boards using compressed air, injury to the eyes could result from splashing solvent as it is removed from the printed circuit board. (p. 7-2)

There are exposed AC and DC connections inside the cabinet. These exposed electrical connections present a shock hazard that can cause injury or death. (p. 7-4)

If input or output circuits are a shock hazard after disconnecting system power at the power entry panel, then the door of the cabinet containing these externally powered circuits must be marked with a warning stating that multiple power sources exist. (p. 7-4)

# Support Services

ABB will provide assistance in the operation and repair of its products. Requests for sales or application services should be made to your nearest sales or service office. ABB can also provide installation, repair and maintenance contract services.

When ordering parts, use nomenclature or part numbers and part descriptions from equipment manuals. Parts without a description must be ordered from the nearest sales or service office. Recommended spare parts lists, including prices are available through the nearest sales or service office.

ABB has modern training facilities available for training your personnel. On-site training is also available. Contact your nearest ABB sales office for specific information and scheduling.

Additional copies of this instruction, or other instructions, can be obtained from the nearest ABB sales office at a reasonable charge.

# Trademarks and Registrations



Registrations and trademarks used in this document include:

| | |
|---|---|
| ™ Composer | Trademark of ABB Automation Inc. |
| ® INFI 90 | Registered trademark of ABB Automation Inc. |

# Preface

The IMASI23 Analog Input Module is a Harmony rack I/O module that is part of the Symphony Enterprise Management and Control System. It has 16 analog input channels that interface isolated thermocouple, millivolt, RTD, and high level analog signals to a controller with an analog-to-digital conversion resolution of 24 bits. Each channel has its own analog-to-digital converter and can be independently configured to handle the desired input type. These analog inputs are used by a controller to monitor and control a process.

The IMASI23 module can be used as a direct replacement for the IMASI03 or IMASI13 modules with only minor modifications. Changes to specification S11 in function code 216 are required to handle the differences in resolution choices. Verification of power supply sizing calculations and system current requirements could be necessary because of the change in power consumption.

This instruction explains the IMASI23 module specifications and operation. It details the procedures necessary to complete setup, installation, maintenance, troubleshooting, and replacement of the module.

# List of Effective Pages

Total number of pages in this instruction is 82, consisting of the following:

| Page No. | Change Date |
|---|---|
| Preface | Original |
| List of Effective Pages | Original |
| iii through ix | Original |
| 1-1 through 1-10 | Original |
| 2-1 through 2-12 | Original |
| 3-1 through 3-7 | Original |
| 4-1 through 4-11 | Original |
| 5-1 through 5-2 | Original |
| 6-1 through 6-9 | Original |
| 7-1 through 7-4 | Original |
| 8-1 | Original |
| A-1 through A-9 | Original |
| B-1 through B-2 | Original |
| C-1 through C-3 | Original |
| Index-1 through Index-3 | Original |

**NOTE:** Changed text or tables are indicated by a vertical bar adjacent to the changed area. Changed figures are indicated by a vertical bar next to the figure caption. The date appears beside the page number.

# Table of Contents


***Section 1 Introduction ..... 1-1***

Overview ..... 1-1
Intended User ..... 1-1
Features ..... 1-1
Instruction Content ..... 1-3
How to Use this Instruction ..... 1-4
Document Conventions ..... 1-5
Glossary of Terms and Abbreviations ..... 1-5
Reference Documents ..... 1-5
Related Nomenclature ..... 1-6
Specifications ..... 1-6

***Section 2 Description and Operation ..... 2-1***

Introduction ..... 2-1
Module Description ..... 2-1
Functional Operation ..... 2-1
Isolated A/D Converter ..... 2-2
Cold Junction Reference ..... 2-2
Digital Input Multiplexer (MUX) ..... 2-3
Microcontroller and Memory ..... 2-3
Switch Settings ..... 2-3
LED Indicators ..... 2-4
I/O Expander Bus ..... 2-4
I/O Expander Bus Interface ..... 2-5
Data Values ..... 2-5
Termination Units ..... 2-5
Function Codes ..... 2-6
Automatic Adjustments and Corrections ..... 2-6
Input Processing ..... 2-6
Point Value Calculation ..... 2-7
Input Calibration ..... 2-7
Cold Junction Compensation ..... 2-7
User Gain and Offset Adjustment ..... 2-8
Engineering Units Conversion ..... 2-8
Automatic Calibration ..... 2-9
Field Calibration ..... 2-9
Diagnostic, Security, and Integrity Checks ..... 2-9
Diagnostics in Diagnostic Mode ..... 2-9
Diagnostics During Normal Operation ..... 2-10
Diagnostics on Reset ..... 2-10
I/O Expander Bus Communication Security ..... 2-10
Open Input Detection ..... 2-10

# Table of Contents (continued)


***Section 2 Description and Operation** (continued)*

Alarm and Exception Reporting ..... 2-11
Online Configuration ..... 2-11
Logic Power ..... 2-11
Mounting Hardware ..... 2-11

***Section 3 Installation ..... 3-1***

Introduction ..... 3-1
Special Handling ..... 3-1
Unpacking and Inspection ..... 3-2
Setup and Installation ..... 3-2
Address Selection Switch (S1) ..... 3-3
Configuring Inputs ..... 3-4
Termination Unit Configuration ..... 3-5
Physical Installation ..... 3-5
Wiring Connections and Cabling ..... 3-6
Wiring ..... 3-6
Cable Connections ..... 3-7

***Section 4 Configuration and Calibration ..... 4-1***

Introduction ..... 4-1
Configuring Inputs ..... 4-1
Configuring Function Codes ..... 4-1
Calibrating Inputs ..... 4-3
Field Calibration ..... 4-4
Procedure ..... 4-6
Test Equipment Required ..... 4-7
Individual Channel Calibration ..... 4-8

***Section 5 Operating Procedures ..... 5-1***

Introduction ..... 5-1
Startup ..... 5-1
Operation ..... 5-1
Status LEDs ..... 5-1

***Section 6 Troubleshooting ..... 6-1***

Introduction ..... 6-1
Status LEDs ..... 6-1
Alarm and Exception Reporting ..... 6-1
Problem Reports ..... 6-1

# Table of Contents (continued)


***Section 6 Troubleshooting** (continued)*

Error Messages and Corrective Actions ..... 6-3
Input Channel Status ..... 6-3
Analog Input Module Errors ..... 6-4
Error Example ..... 6-6
I/O Expander Bus Interface Test ..... 6-7
Module Pin Connections ..... 6-7

***Section 7 Maintenance ..... 7-1***

Introduction ..... 7-1
Preventive Maintenance Schedule ..... 7-1
Equipment and Tools Required ..... 7-2
Preventive Maintenance Procedures ..... 7-2
Printed Circuit Board Cleaning ..... 7-3
General Cleaning and Washing ..... 7-3
Edge Connector Cleaning ..... 7-3
Checking Connections ..... 7-4

***Section 8 Repair and Replacement ..... 8-1***

Introduction ..... 8-1
Module Repair and Replacement ..... 8-1

***Appendix A NTAI06 Termination Unit ..... A-1***

Introduction ..... A-1
Cold Junction Reference Input ..... A-1
Configuring Inputs ..... A-1

***Appendix B Replacing an IMASI13 Module ..... B-1***

Introduction ..... B-1
User Differences ..... B-1
Power Consumption Comparison ..... B-2

***Appendix C Replacing an IMASI03 Module ..... C-1***

Introduction ..... C-1
User Differences ..... C-1
Function Code 216 Modifications ..... C-2
Power Consumption Comparison ..... C-3

# List of Figures


| No. | Title | Page |
|---|---|---|
| 1-1. | Harmony Rack I/O Architecture | 1-2 |
| 2-1. | IMASI23 Functional Block Diagram | 2-2 |
| 2-2. | Mounting Hardware | 2-12 |
| 3-1. | Module Layout | 3-3 |
| 3-2. | S1 Switch | 3-4 |
| 3-3. | Six Pin Jumper Block Configurations | 3-5 |
| 3-4. | Latched and Un-Latched Positions of Captive Latches | 3-6 |
| 3-5. | Cable Connections | 3-7 |
| A-1. | NTAI06 Layout (Rev A Hardware) | A-2 |
| A-2. | NTAI06 Layout (Rev B Hardware) | A-3 |
| A-3. | NTAI06 Input Circuit | A-6 |
| A-4. | NTAI06 Field Input Termination Examples | A-7 |
| A-5. | IMASI23 Input Examples | A-8 |
| A-6. | NTAI06 Cable Connection | A-9 |
| B-1. | IMASI13 Four Pin Jumper Block Configuration | B-1 |
| B-2. | IMASI23 Six Pin Jumper Block Configuration | B-1 |
| C-1. | IMASI03 Three Pin Jumper Locations | C-2 |
| C-2. | IMASI23 Six Pin Jumper Block Configuration | C-2 |


# List of Tables


| No. | Title | Page |
|---|---|---|
| 1-1. | Glossary of Terms and Abbreviations | 1-5 |
| 1-2. | Reference Documents | 1-6 |
| 1-3. | Related Nomenclature | 1-6 |
| 1-4. | Specifications | 1-6 |
| 3-1. | Sample Address Switch Settings (S1) | 3-4 |
| 6-1. | IMASI23 Error Types | 6-2 |
| 6-2. | Module Status (Byte 3) Error Codes | 6-4 |
| 6-3. | P1 Power Connections | 6-8 |
| 6-4. | P2 Expander Bus Connections | 6-8 |
| 6-5. | P3 Input Signal Connections | 6-9 |
| 7-1. | Preventive Maintenance Schedule | 7-2 |
| A-1. | NTAI06 Input Types | A-3 |
| A-2. | NTAI06 Jumper Configurations | A-4 |
| A-3. | NTAI06 Input Type Descriptions | A-4 |
| C-1. | IMASI03 Jumpers Used for Each Channel | C-1 |

# Safety Summary






**Electrostatic Sensitive Device**
Devices labeled with this symbol require special handling precautions as described in the installation section.

**GENERAL WARNINGS**

**Equipment Environment**
All components, whether in transportation, operation or storage, must be in a noncorrosive environment.

**Electrical Shock Hazard During Maintenance**
Disconnect power or take precautions to insure that contact with energized parts is avoided when servicing.

**SPECIFIC WARNINGS**

Disconnect power before installing dipshunts on the MMU backplane. Failure to do so will result in contact with cabinet areas that could cause severe or fatal shock. (p. 3-5)

Disconnect power from the source or take precautions to ensure that contact with energized parts is avoided when performing these procedures. Failure to follow this warning constitutes an electrical shock hazard that can injure personnel and damage equipment. (p. 7-2)

Wear eye protection whenever working with cleaning solvents. When removing solvents from printed circuit boards using compressed air, injury to the eyes could result from splashing solvent as it is removed from the printed circuit board. (p. 7-2)

There are exposed AC and DC connections inside the cabinet. These exposed electrical connections present a shock hazard that can cause injury or death. (p. 7-4)

If input or output circuits are a shock hazard after disconnecting system power at the power entry panel, then the door of the cabinet containing these externally powered circuits must be marked with a warning stating that multiple power sources exist. (p. 7-4)

# Support Services

ABB will provide assistance in the operation and repair of its products. Requests for sales or application services should be made to your nearest sales or service office. ABB can also provide installation, repair and maintenance contract services.

When ordering parts, use nomenclature or part numbers and part descriptions from equipment manuals. Parts without a description must be ordered from the nearest sales or service office. Recommended spare parts lists, including prices are available through the nearest sales or service office.

ABB has modern training facilities available for training your personnel. On-site training is also available. Contact your nearest ABB sales office for specific information and scheduling.

Additional copies of this instruction, or other instructions, can be obtained from the nearest ABB sales office at a reasonable charge.

# Trademarks and Registrations



Registrations and trademarks used in this document include:

| | |
|---|---|
| ™ Composer | Trademark of ABB Automation Inc. |
| ® INFI 90 | Registered trademark of ABB Automation Inc. |

# Introduction

Section 1

## Overview

The IMASI23 Analog Input Module is a Harmony rack I/O module that is part of the Symphony Enterprise Management and Control System. It has 16 analog input channels that interface isolated thermocouple, millivolt, RTD, and high level analog signals to a controller with an analog-to-digital conversion resolution of 24 bits. Each channel has its own analog-to-digital converter and can be independently configured to handle the desired input type. These analog inputs are used by the controller to monitor and control a process. The controller performs the control functions; I/O modules provide the input and output functions.

**NOTE:** The IMASI23 module is fully compatible with existing INFI 90 OPEN Strategic Enterprise Management Systems.

Figure 1-1 shows the Harmony rack I/O architecture. A Harmony area controller and the Harmony rack controllers can use the rack I/O modules for I/O interface.

## Intended User

Personnel installing, operating, or maintaining the IMASI23 module should read this instruction before performing any installation, operation, or maintenance procedures. Installation requires an engineer or technician with experience handling electronic circuitry. Those working with the analog input module should have experience working with and know the precautions to take around AC/DC power. A knowledge of the Symphony system and electronic principles is also required.

## Features

The design of the IMASI23 module allows for flexibility in creating a process management system.

- The IMASI23 module conditions (filters, converts, and isolates) up to 16 analog input signals.

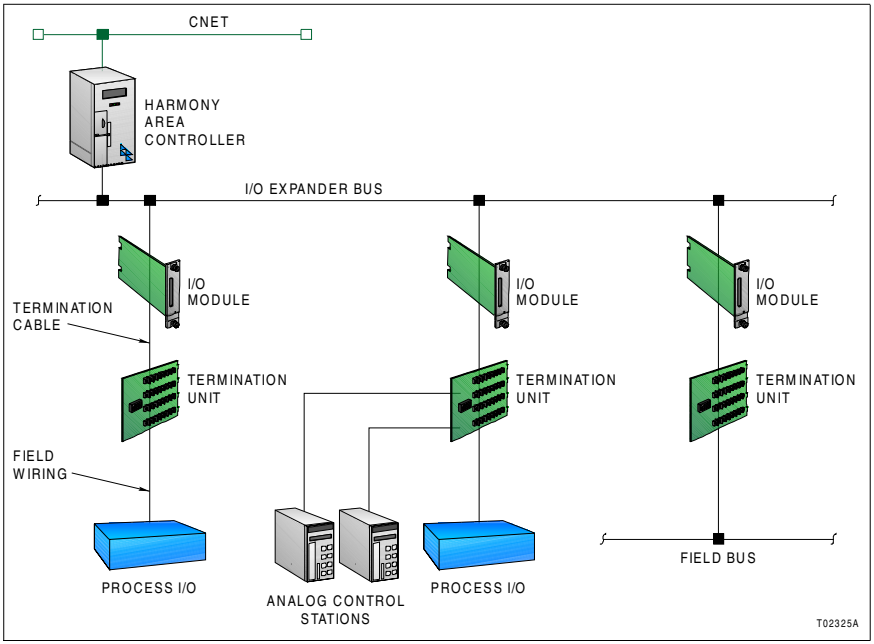


**Figure 1-1. Harmony Rack I/O Architecture**

- The IMASI23 module converts analog signals to digital values, adds compensation and corrections as needed, and provides digital values to the controller through the I/O expander bus.
- Each channel is individually programmable for the following input types:

  B, E, J, K, L, N (14 AWG), N (28 AWG), R, S, T, U thermocouples.

  Chinese type E and Chinese type S thermocouples.

  -100 to +100 millivolt.

Three-wire RTD (10, 100 U.S., 100 European, 120 and Chinese 53 ohm).

-10 to +10 VDC high level voltage.

4 to 20 milliampere current.

- Resolution of the analog-to-digital conversion process is 24 bits.
- Input type and channel resolution can be selected independently for each channel, permitting any mix of inputs on a single IMASI23 module.
- Channel isolation and open input detection are provided for each channel.
- Input circuit offset, gain, and nonlinearity errors are recorded during a one time factory calibration procedure. These measurements provide error compensation during normal operation. The analog input module does automatic recalibration during normal operation to compensate for component aging and temperature drift. No user calibration is ever required.
- Engineering units conversion to degrees C or F is automatically calculated on all input signals that are thermocouple or RTD types. These conversions correct for nonlinearities in the conversion to temperature units using industry standard linearization tables.
- The analog input module scales the block output value to engineering units for low and high level voltage inputs. Input type, and zero and span values are specified in FC 216.
- Thermocouple inputs have cold junction compensation. Each termination device has a built-in cold junction reference. The cold junction reference applied to thermocouple inputs can be this built-in reference or it can be a remote reference read from another input from this or another I/O module.
- The IMASI23 module can be removed or installed without turning off power to the system.



# Instruction Content

This instruction consists of following sections:

**Introduction** — Overview of the IMASI23 module including features, description, and specifications.

**Description and Operation** — Explains the module operation and input circuits.

**Installation** — Contains the cautions to observe when handling IMASI23 modules. It shows the steps to install and connect the module before applying power. This section also covers switch and jumper settings.

**Configuration and Calibration** — Presents steps to configure the analog input module inputs for specific input types and how to field calibrate an input channel for a specific input type.

**Operating Procedures** — Explains the operator interface to the IMASI23 module.

**Troubleshooting** — Describes the IMASI23 module error codes and explains how to test the module.

**Maintenance** — Provides a preventive maintenance schedule for the IMASI23 module. This schedule can be used for all the modules in the module mounting unit.

**Repair and Replacement** — Contains the cautions and steps for removing and replacing the IMASI23 module.

**Appendices** — Appendix A provides configuration information for the NTAI06 termination unit. Appendix B provides information on replacing an IMASI13, and Appendix C provides information when replacing an IMASI03 module.

# How to Use this Instruction

Read this instruction in sequence. It is important to become familiar with the entire contents of this instruction before using the module. Refer to a specific section for information as needed.

1. Read the operating procedures section before installing the module.

2. Perform the steps in the installation section.

3. Refer to the troubleshooting section to resolve problems if they occur.

4. Refer to the maintenance section for scheduled maintenance requirements.

5. Refer to the repair and replacement procedures to replace a module.

## Document Conventions

The ? in the nomenclature or in a part number indicates a variable for that position (e.g., IMMFP1?).

## Glossary of Terms and Abbreviations

Table 1-1 contains those terms and abbreviations that are unique to ABB Automation or have a definition that is different from standard industry usage.

**Table 1-1. Glossary of Terms and Abbreviations**

| Term | Definition |
|---|---|
| Controlway | High speed, redundant, peer-to-peer communication link. Used to transfer information between intelligent modules within a Harmony control unit. |
| Cnet | Symphony system advanced data communication highway. |
| FC | Function code. |
| Function code | An algorithm which manipulates specific functions. These functions are linked together to form the control strategy. |
| I/O expander bus | Parallel communication bus between the Harmony rack controllers and rack I/O modules. |
| Module mounting unit | A card cage that provides electrical and communication support for Harmony rack modules. |
| MMU | Module mounting unit. A card cage that provides electrical and communication support for Harmony rack modules. |
| Termination unit | Provides input/output connection between plant equipment and the Harmony rack modules. |
| TU | Termination unit. |



## Reference Documents

Table 1-2 lists ABB Automation instructions for equipment that is referenced in this instruction.

**Table 1-2. Reference Documents**

| Number | Document |
|---|---|
| WBPEEUI200502?0 | Module Mounting Unit (IEMMU11, IEMMU12, IEMMU21, IEMMU22) |
| WBPEEUI210504?0 | Composer™ Function Code Application Manual |
| WBPEEUI260046?0 | Analog Input Termination Unit (NTAI06) |

## Related Nomenclature

Table 1-3 lists nomenclature related to the IMASI23 module.

**Table 1-3. Related Nomenclature**

| Nomenclature | Description |
|---|---|
| IEMMU11, EMMU12, IEMMU21, IEMMU22 | Module mounting unit |
| NFTP01 | Field termination panel |

## Specifications

Table 1-4 contains the specifications for the IMASI23 module.

**Table 1-4. Specifications**

| Property | Characteristic/Value |
|---|---|
| Power requirements<br>Operating voltage | 5 VDC at 500 mA typical, maximum 750 mA |
| Overvoltage category<br>(IEC 61010-1) | I for circuit above 150V,<br>II for circuit below 150V |

**Table 1-4. Specifications** *(continued)*

| Property | Characteristic/Value |
|---|---|
| Analog input channels | 16 independently configured channels |
| Thermocouples | Type B, E, J, K, L, N (14 AWG), N (28 AWG), R, S, T, U<br>Chinese type E and Chinese type S |
| 3-wire RTD | 100 Ω platinum: U.S. Lab. Standard<br>100 Ω platinum: U.S. Industry Standard<br>100 Ω platinum: European Standard<br>120 Ω nickel<br>10 Ω copper<br>Chinese 53 Ω copper |
| Millivolt | -100 mV to +100 mV, 0 to 100 mV |
| High level | 1 to 5 VDC, 0 to 5 VDC, 0 to 10 VDC<br>-10 VDC to +10 VDC, or user specified range<br>within -10 VDC and +10 VDC |
| Current | 4 to 20 mA, system or external power. |
| Input impedance | |
| Current<br>Voltage | 10 MΩ minimum (mV, TC)<br>100 kΩ minimum (V, mA) |
| A-to-D resolution | 24 bits |
| Conversion | 180 msec for all 16 channels; each channel has dedicated A/D converter |
| Accuracy (% of full scale range) | |
| Current<br>High level voltage<br>Low level voltage<br>Resistance<br>Temperature effect<br>0° to 70° C (32° to 158° F) | 0.02%<br>0.04%<br>0.03%<br>0.05%<br>± 0.003% of full scale range per degree C maximum |
| Maximum lead wire resistance effect | |
| Voltage<br>Uncompensated<br>Compensated | <br>1 µV of error per Ω of lead wire resistance<br>0.1 µV of error per Ω of lead wire resistance |
| Resistance<br>Uncompensated<br>Compensated | <br>0.020 Ω error per Ω of lead wire resistance<br>0.008 Ω of error per Ω of lead wire resistance |
| Input setting (time) | 1.5 seconds to within 1% after full scale step change |

**Table 1-4. Specifications** *(continued)*

<table>
<tr><th>Property</th><th>Characteristic/Value</th></tr>
<tr><td>Cold junction reference accuracy</td><td>± 0.5° C</td></tr>
<tr><td>Software temperature linearization accuracy</td><td>± 0.1° C</td></tr>
<tr><td>Common mode isolation<br><br>(IEC 61010-1, IEC 60255-5, IEC 60060)<br><br>Channel to channel and channel to logic</td><td>250 VDC/$V_{RMS}$ at 60 Hz
<table>
<tr><th>Test</th><th>Common Mode</th><th>Normal Mode</th></tr>
<tr><td>Insulation resistance (100/500 VDC)</td><td>100 MΩ</td><td>N/A</td></tr>
<tr><td>Dielectric VAC (45 - 65 Hz) or VDC</td><td>1.4 kV rms/1min. or 1.95 kV DC/1min.</td><td>N/A</td></tr>
<tr><td>Impulse voltage (1.2/50 µS)</td><td>±2.55 kVp</td><td>±1 kVp</td></tr>
</table></td></tr>
<tr><td>Rejection (50-60 Hz)<br><br>Normal mode<br>Common mode</td><td><br><br>-80 dB minimum<br>-120 dB minimum</td></tr>
<tr><td>Peak or continuous voltage</td><td>± 15 VDC absolute maximum[1]</td></tr>
<tr><td>Electromagnetic compatibility<br><br>Conducted transients</td><td>
<table>
<tr><th>Test</th><th>Common Mode</th><th>Normal Mode</th></tr>
<tr><td>Voltage/current surge (1.2/50 µS to 8/20 µS) (IEC 61000-4-5, EN 61000-4-5)</td><td>±2 $kV_P$</td><td>±1 $kV_P$</td></tr>
<tr><td>Fast transient bursts (IEC 61000-4-4, EN 61000-4-4)</td><td>±2 $kV_P$</td><td>N/A</td></tr>
<tr><td>Damped oscillatory wave, 0.1 MHz and 1 MHz (IEC 61000-4-12, EN 61000-4-12)</td><td>±1 $kV_P$</td><td>±0.5 $kV_P$</td></tr>
<tr><td>Ring wave (IEC 61000-4-12, EN 61000-4-12)</td><td>±2 $kV_P$</td><td>±1 $kV_P$</td></tr>
</table></td></tr>
<tr><td>Electrostatic discharge (IEC 61000-4-2, EN 61000-4-2)</td><td>Contact: ±6 kV<br>Air: ±8 kV</td></tr>
</table>

**Table 1-4. Specifications** *(continued)*

| Property | Characteristic/Value |
|---|---|
| Magnetic and electromagnetic fields | |
| Power frequency magnetic field (IEC 61000-4-8, EN 61000-4-8) | Continuous: 30 $A_{RMS}$/m<br>Short duration: 300 $A_{RMS}$/m |
| Pulse magnetic field (IEC 61000-4-9, EN 61000-4-9) | Peak value: 300 A/m |
| Damped oscillatory magnetic field, 0.1 MHz and 1 MHz (IEC 61000-4-10, EN 61000-4-10) | Peak value: 30 A/m |
| Radiated radio-frequency electromagnetic field, 80 MHz to 1GHz (IEC 61000-4-3) | Unmodulated RMS: 10 V/m<br>Amplitude modulated: 80% AM (1 kHz) |
| Radiated radio-frequency field, 900 ±5 MHz (ENV 50204) | Unmodulated RMS: 10 V/m<br>Pulse modulated: Duty cycle 50%, Rep. cycle 200 Hz |
| Radio-frequency common mode, amplitude modulated, 0.15 MHz to 80 MHz (IEC 61000-4-6) | Unmodulated RMS: 10 V<br>Amplitude modulated: 80% AM (1 kHz)<br>Source impedance: 150 Ω |
| Emission test RF radiated fields, 30 MHz to 1000 MHz (EN 55011) | Class A |
| Mounting | Occupies a single slot in a standard module mounting unit. |
| Environment | |
| Ambient temperature | 0° to 70° C (32° to 158° F) |
| Relative humidity | 5% to 95% up to 55° C (131° F) (noncondensing)<br>5% to 45% at 70° C (158° F) (noncondensing)<br>Pollution degree: 1 |
| Altitude | Sea level to 3 km (1.86 miles) |
| Air quality | Noncorrosive |
| Shipping weight | 1.146 kg (2.5 lb) |
| Container size | 27.94 cm x 35.56 cm x 5.54 cm (11 in. x 14 in. x 3 in.) |



**Table 1-4. Specifications** *(continued)*

| Property | Characteristic/Value |
|---|---|
| CE mark declaration | This product, when installed in a Symphony cabinet, complies with the following Directives/Standards for CE marking. |
| EMC96 Directive 89/336/EEC | EN50082-2 Generic Immunity Standard - Part 2: Industrial Environment<br>EN50081-2 Generic Emission Standard - Part 2: Industrial Environment |
| Low Voltage Directive 73/23/EEC | EN61010-1 Safety Requirements for Electrical Equipment for Measurement, Control and Laboratory Use - Part 1: General Requirements |
| Certifications | |
| CSA (pending) | Certified for use as process control equipment in an ordinary (nonhazardous) location. |
| Factory Mutual (FM) (pending) | Approved as nonincendive equipment for use in Class I; Division 2; Groups A, B, C, D; hazardous location. |

**NOTE:**
1. Absolute maximum ratings indicate limits beyond which damage to the device may occur and device operation is not guaranteed.

SPECIFICATIONS ARE SUBJECT TO CHANGE WITHOUT NOTICE

# Description and Operation

Section 2

## Introduction

This section explains the inputs, control logic, communication, and connections for the IMASI23 module. The ASI module interfaces 16 analog inputs to a Harmony controller. The Harmony controller communicates with its I/O modules over the I/O expander bus (Fig. 1-1). Each I/O module on the bus has a unique address set by its address dipswitch (S1).

## Module Description

The ASI module consists of a single printed circuit board that occupies one slot in a module mounting unit (MMU). Two captive latches on the module front panel secure it to the module mounting unit.

The ASI module has three card edge connectors for external signals and power: P1, P2 and P3. P1 connects to the supply voltages. P2 connects the module to the I/O expander bus, over which it communicates with the controller. Connector P3 carries the inputs from the termination cable plugged into the termination unit (TU). The terminal blocks for field wiring are on the termination unit.

A single dipswitch on the module sets its address or selects onboard tests. Jumpers configure the type of analog input signals.

## Functional Operation

The ASI module is an intelligent module with an onboard microcontroller and memory. It interfaces to a controller over the I/O expander bus. An onboard microcontroller allows the ASI module to perform the input channel processing. This allows the controller to do other tasks. Input processing tasks include error compensation, adjustments, and conversion to engineering units.

Each channel provides underrange, overrange, and open input detection. Onboard circuitry detects either open field wires or a disconnected termination unit cable. Open input detection is provided for millivolt, thermocouple, RTD, 1 to 5 VDC, and 4 to 20 milliampere input types and can detect any combination of open input wires.

Figure 2-1 shows a block diagram of the IMASI23 module.

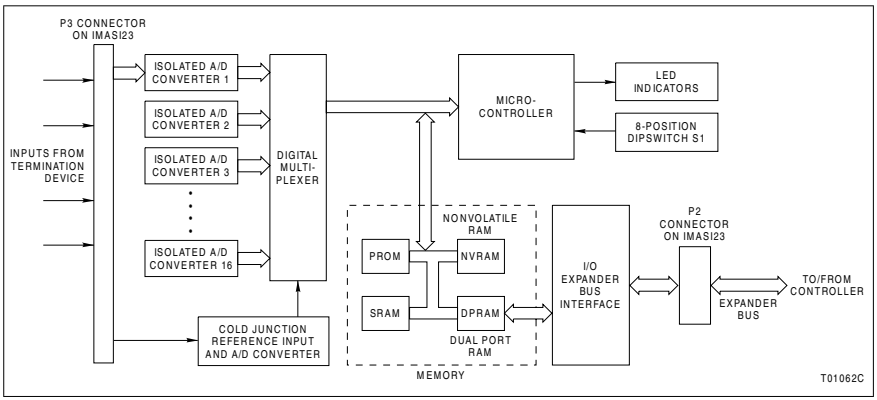


**Figure 2-1. IMASI23 Functional Block Diagram**

## Isolated A/D Converter

Each input channel has an A/D converter (delta-sigma type). Isolation is done by DC/DC converters (one per channel) and optocouplers on the digital serial line of the A/D converter. Each channel accepts voltage and resistance inputs. Resistance measurements are made by digitizing the voltage drop created across the input resistance source. A precision constant current source supplies the current used to measure the input.

## Cold Junction Reference

The ASI module measures the cold junction RTDs on the termination unit of the analog input module. This results in an accurate reading of the ambient temperature at the field wire termination area. This value can be used by the ASI module to compensate for voltages generated from the bimetal

connections made by terminating the field wires (thermocouple wires) onto the terminal blocks of the termination unit.

The block address of the cold junction reference used by thermocouple inputs on the ASI module is contained in FC 215, specification S3.

Each analog input module configured for a thermocouple input requires a cold junction reference. Each analog input module can only have one reference which can be used by up to 16 thermocouple inputs. The exception to this is when one of the inputs is used as a remote cold junction reference.

Refer to Section 4 for more information.

## Digital Input Multiplexer (MUX)

Once isolated, digitized, and buffered, the input signal is sent to the microcontroller by a digital multiplexer. All the inputs, including the references and cold junction input, are multiplexed as shown in Figure 2-1.

## Microcontroller and Memory

The onboard microcontroller coordinates ASI functions. The main functions are:

- Channel and cold junction reference switching.
- Programming A/D converters.
- Reading the A/D converters and applying all necessary correction factors.
- Interfacing to switch and LEDs (used for diagnostic mode).
- Background integrity checking.
- Reading and writing expander bus data through dual port RAM (DPRAM).

## Switch Settings

The ASI module has one eight-position dipswitch to select the I/O module address on the I/O expander bus. This switch also selects built-in diagnostics for stand alone testing.



## LED Indicators

The ASI module has two LED indicators, one red and one green, which show the operating status. The LEDs will:

- Flash red on power-up.
- Remain off (both LEDs) after passing onboard diagnostics until the ASI module is configured by the controller.
- Show solid green after the controlling controller downloads configuration data.
- Show solid green during normal running.
- Blink green when the controller that configured the ASI module enters configure mode from execute mode.
- Blink green if I/O expander bus communication is lost (if the controller is removed).
- Show solid red if a fatal failure of the ASI module occurs. For example, if power up diagnostics fail.
- Show solid red for a power fail interrupt (PFI).

# I/O Expander Bus

The I/O expander bus is a high-speed, synchronous, parallel bus. It provides a path between controllers and I/O modules. The controller sends control functions to the ASI module, and the ASI module provides input data to the controller. The P2 card edge of the ASI module and controller connect to the bus.

The I/O expander bus is parallel signal lines located on the module mounting unit backplane. A 12-position dipshunt placed in a socket on the MMU backplane connects the bus between the controller and I/O modules. Cable assemblies can extend the bus to eight module mounting units.

A controller and its I/O modules form a subsystem within a Harmony control unit (HCU). The I/O expander bus between control and I/O subsystems must be separated. Leaving a dip-shunt socket empty or not connecting the module mounting units with cables separates them.

## I/O Expander Bus Interface

The ASI module communicates with the controller through a shared memory interface connected to the I/O expander bus. The ASI module constantly updates the shared memory device (dual port RAM) with the current values of the inputs. The controller can read these values at any time, even if the ASI module is simultaneously writing to the dual port RAM.

The ASI module uses a custom gate array for the I/O expander bus interface. An integrated circuit holds all the control logic and communication protocol. This integrated circuit provides these functions:

- Address comparison and detection.
- Message decoding and translation.
- Data line filtering of bus signals.
- Onboard bus drivers.
- Expander bus watchdog.

A dual port RAM stores data that can be accessed at the same time by the controller and the I/O module's microcontroller.

## Data Values

For all inputs, channel values are adjusted based on the factory calibration. Thermocouple inputs receive cold junction reference compensation. Lead wire resistance adjustments are performed when necessary (for cold junction reference only). The ASI module provides values to the controller over the I/O expander bus. These values are in engineering units.

The ASI module sends a status indication to the controller for each input channel. This status indicates any hardware errors and channel configuration errors detected by the ASI module.

## Termination Units

The IMASI23 module uses one NTAI06 termination unit to connect to field signals. An NKAS01 or NKAS11 cable connects the termination unit to the ASI module through its P3 connector.

The termination unit contains RTDs used for cold junction compensation of thermocouple inputs. They also contain the circuitry needed to convert 4 to 20 milliampere field signals into the 1 to 5 VDC needed to input to the analog input



module. The system power supply is protected from short circuits by fuses on the NTAI06 termination unit.

## Function Codes

**NOTE:** Refer to Appendix C for function code specification changes required when replacing an IMASI03 module with an IMASI23 module.

FCs 215 and 216 in the controller configure the ASI module and identify the active analog inputs. One FC 215 is required for each ASI module. One FC 216 is required for each input channel used on the ASI module. These function codes specify the I/O expander bus address of the ASI module and the channel number on the module connected to a specific analog input signal.

The type of the input and the zero and span in engineering units must also be specified to ensure proper scaling and corrections for calibration, cold junction compensation, and nonlinearity correction.

Add FC 215 and 216 to the controller to configure the ASI module. Set FC 217 in the controller to calibrate the ASI module or to set the user gain and offset values. Refer to the ***Composer Function Code Application Manual*** for more information.

# Automatic Adjustments and Corrections

Input processing, calibration, point value calculations, lead wire resistance adjustment, cold junction compensation, gain and offset adjustment, and engineering unit conversions are all automatically performed by the ASI module.

## Input Processing

Each A/D converter samples the input signal continuously without need for a ***start convert*** command. The A/D output register is updated at a rate determined by the internal filter and can be ready at any time. The ASI module scans all A/D converter output registers at a rate of about 180 milliseconds including calibration and open circuit tests.

In addition to the input channels, the built-in cold junction reference is read during normal input scanning.

## Point Value Calculation

The ASI module maintains a set of adjustment values for each input channel. These values correct for offset and gain errors in the input channel. The raw analog-to-digital converter count value is converted to an actual input signal value using the calibration data.

For thermocouple inputs, an adjustment is made for the cold junction temperature of the thermocouple. An additional, user-specified adjustment is then applied, if one has been defined with FC 217. The final corrected input reading is then converted to engineering units using either thermocouple or RTD conversion tables, or the engineering unit zero and span values specified for the input.

The following sections describe the various types of input value adjustments.

## Input Calibration

Each input channel is calibrated at the factory. During the calibration procedure, any offset and gain errors are identified and required correction factors are calculated and stored in the analog input module's nonvolatile memory.

These factors are used when the input channel is scanned to correct the reading. A calibration adjustment is applied to active channels and the cold junction reference input.

## Cold Junction Compensation

Thermocouple input channels are adjusted for cold junction temperature. The cold junction reference can either be the built-in reference available on the I/O module's termination unit or a value originating from any other function code block output anywhere in the system. The cold junction reference supplied by the controller is assumed to be in degrees C. The ASI module converts this value to millivolts and adds it to the value from the analog-to-digital converter.

Thermocouple channels identified to be cold junction reference inputs (FC 216, specification S4) use the built-in cold junction reference on the termination unit for their cold junction compensation.



## User Gain and Offset Adjustment

A user-specified linear adjustment can be applied to the input signal before it is converted to engineering units. This gain and offset is applied to the value obtained after all compensation and correction operations are performed.

User offset and gain compensates input signals for user corrections. For example, if a 0 to 10 VDC analog input is 0.1 VDC too high, the ASI module can compensate for this offset by adding an offset value of -0.1 for this channel and input type.

User gain value is multiplied by volts for high level inputs, by millivolts for low level inputs and thermocouple inputs, and by ohms for RTD inputs. The default user gain is a value of one.

User offset is added to the input signal. Units of offset are specified as volts for high level inputs, millivolts for low level inputs, and ohms for RTD inputs. The default user offset is a value of zero. Separate user gain and offset values can be specified for each input channel and each input type. The user gain and offset values can be set and reset using FC 217. Once defined, user gain and offset values remain in nonvolatile memory and are not lost when module power is interrupted. For more information refer to FC 217 in the ***Composer Function Code Application Manual***.

## Engineering Units Conversion

Thermocouple and RTD inputs are converted to the temperature units specified in FC 216, either degrees C or F. Conversion tables representing the voltage (or resistance) to temperature relationship are used for this conversion. The table used in performing the conversion depends upon the input signal type specified.

If the input is identified as either millivolt or high level voltage, then the specified engineering unit zero and span values are used to convert the input reading to a scaled engineering unit value. If special calculations need to be performed prior to conversion to engineering units (external to FC 215 and FC 216 blocks), then the zero and span values specified in the function code should be set to represent a standard voltage span for the input. The I/O module FC 216 would then output a corrected voltage input reading which may be processed in the controller

through a square root, polynomial, or other function block followed by a scaling function to provide the value in engineering units.

### Automatic Calibration

Compensation for drift of input channel circuitry is done by periodic automatic calibration of each A/D converter using an internal precision low-drift reference. This function is transparent to normal input channel processing.

### Field Calibration

Field calibration is not necessary in normal situations. It is possible to perform calibration procedures in the field if ultra stable, known, precision references are available. Field calibration data is stored in nonvolatile memory. The complete field calibration procedure is in Section 4.

Factory calibration data is stored in a unique nonvolatile memory area. If field calibration does not provide the desired results, the factory calibration data can be restored.

Using FC 217 to change the gain or offset values per channel and type, it can compensate for differences in input signal readings. Tuning these parameters can take the place of a field calibration. Refer to FC 217, specification S1.

## Diagnostic, Security, and Integrity Checks

The IMASI23 module performs built-in tests during power-up and on reset to check the operation and integrity of the module.

### Diagnostics in Diagnostic Mode

The ASI module performs built-in tests in diagnostic mode to check module operation. These tests include:

- A/D internal reference checks.
- Switch test.
- Watchdog timer test.
- CPU test.
- Timer test.
- ROM test.



- DPRAM test.
- NVRAM test.
- SRAM test.
- System reference checks.
- Configured channel reference checks.
- Unconfigured channel reference checks.

## Diagnostics During Normal Operation

During startup, the ASI module verifies the checksum of the PROM and nonvolatile RAM. Watchdog timers safeguard against an A/D converter failure which would halt input scanning. Input circuits are monitored for open circuits. Any errors are reported to the controller through the I/O module status. Certain failures detected by these diagnostics may result in halting the I/O module.

## Diagnostics on Reset

These tests include:

- PROM checksum verification.
- NVRAM checksum verification.
- DPRAM/SRAM verification.
- Processor instruction set tests.
- Timer test.

## I/O Expander Bus Communication Security

Expander bus message integrity is maintained by checksum calculations on each transmitted and received message or data set.

## Open Input Detection

The ASI module recognizes and reports any open inputs on active channels by indicating bad quality on these channels. The exception is for -10 to +10 VDC, 0 to 10 VDC, and 0 to 5 VDC inputs.

## Alarm and Exception Reporting

No alarm or exception reports are generated by the function codes associated with the ASI module. The values input from

the ASI module must be fed to a standard exception reporting block. Refer to Section 6 for more information.

## Online Configuration

All specifications in FCs 215, 216, and 217 associated with the ASI module can be changed during online configuration. When changes are made to the input channel parameters (FC 216), the channel will hold the last value for a short period, the status remains unchanged during this period. This hold time is based on the number of channels that were changed during online configuration.

**NOTE:** Plan on a hold time of four seconds (worst case) for each FC 216 changed during online configuration.

## Logic Power

The ASI module receives its power (+5 V) from the MMU backplane. Power connects through the top 12-pin card edge connector (P1) at the back of the ASI module.

## Mounting Hardware

Harmony rack I/O modules and termination units mount in standard ABB Automation enclosures (CAB-01, CAB-04, CAB-12). The number of modules that can be mounted in a single cabinet varies.

An IEMMU11, IEMMU12, IEMMU21, or IEMMU22 module mounting unit and an NFTP01 field termination panel (FTP) are used for module and termination unit mounting respectively (Fig. 2-2). The mounting unit and termination panel both attach to the side rails in standard 483-millimeter (19-inch) enclosures. Front mount and rear mount MMU versions are available to provide flexibility in enclosure mounting.

A module mounting unit is required to mount and provide power to rack-mounted modules. The unit is for mounting controllers, I/O modules, and communication interface modules. The MMU backplane connects and routes:

- Controlway.
- I/O expander bus.

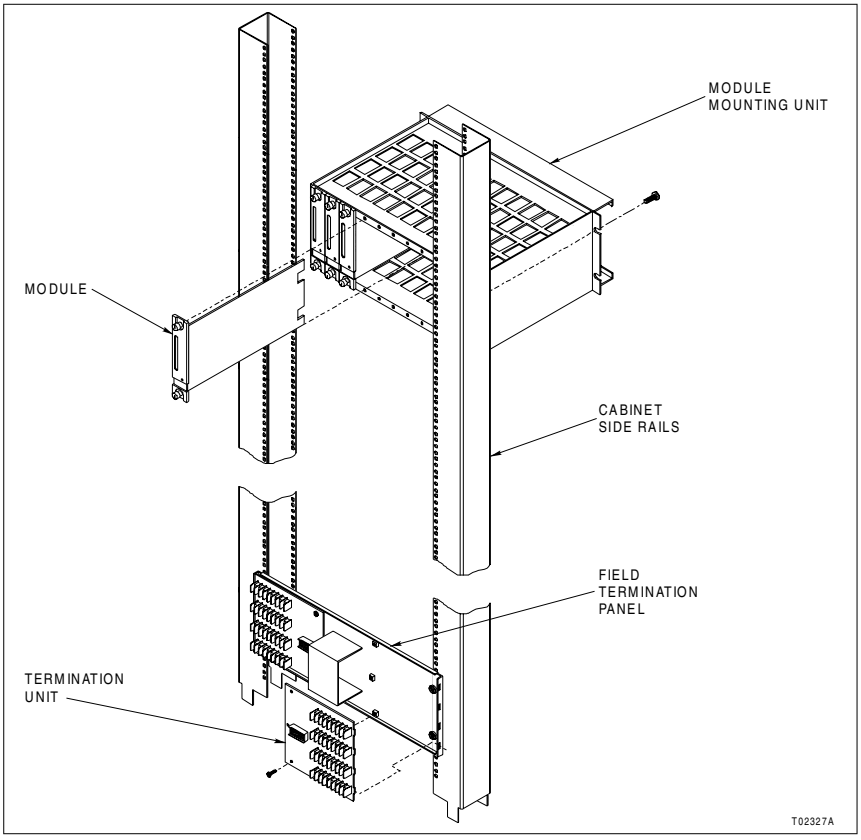


**Figure 2-2. Mounting Hardware**

- Logic power to control, I/O, and interface modules.

The Controlway and I/O expander bus are internal cabinet, communication buses. Communication between rack controllers and communication interface modules is over Controlway.

# Installation

Section 3

## Introduction

This section explains what to do before putting the IMASI23 module (ASI) into operation. ***Do not*** proceed with the installation and operation until you read, understand and do the steps in the order in which they appear. Refer to Appendix A for termination unit wiring instructions. Refer to Section 4 to configure the IMASI23 module.

## Special Handling

**NOTE:** Always use the ABB Automation field static kit (part number 1948385A1), consisting of two wrist straps, ground cord assembly, alligator clip, and static dissipating work surface when working with static sensitive devices. The kit is designed to connect the technician and the static dissipating work surface to the same ground point to prevent damage to the static sensitive devices by electrostatic discharge.

Use the static grounding wrist strap when installing and removing modules. Static discharge may damage static sensitive devices on modules in a cabinet. Use grounded equipment and static safe practices when working with static sensitive devices.

1. ***Use Static Shielding Bag.*** Keep the module in its static shielding bag until you are ready to install it in the system. Save the bag for future use.

2. ***Ground Bags before Opening.*** Before opening a bag containing an assembly with static sensitive devices, touch it to the equipment housing or ground to equalize charges.

3. ***Avoid Touching Circuitry.*** Handle assemblies by the edges; avoid touching the circuitry.

4. ***Avoid Partial Connection of Static Sensitive Devices.*** Verify that all devices connected to the modules are properly grounded before using them.

5. ***Ground Test Equipment.***



6. ***Use an Antistatic Field Service Vacuum.*** Remove dust from the cards if necessary.

7. ***Use a Grounded Wrist Strap.*** Connect the wrist strap to the appropriate grounding plug.

8. ***Do Not Use Lead Pencils to Set Dipswitches.*** To avoid contamination of switch contacts that can result in unnecessary circuit board malfunction, do not use a lead pencil to set a dipswitch.

## Unpacking and Inspection

1. Examine the hardware immediately to verify it has not been damaged in transit.

2. Notify the nearest ABB Automation sales office of any such damage.

3. File a claim for any damage with the transportation company that handled the shipment.

4. Use the original packing material and container to store the hardware.

5. Store the hardware in an environment of good air quality, free from temperature and moisture extremes.

## Setup and Installation

> **NOTE:** Refer to Appendix C for information about replacing an IMASI03 module or Appendix B for an IMASI13 with an IMASI23 module.

Before applying power to the ASI module, make these checks:

1. Check that the module address is set correctly.

2. Check that the jumpers on the module are set correctly.

3. Be sure the dipshunts in the module mounting unit's I/O expander bus are installed correctly.

4. Check that the jumpers on the termination units are set correctly.

5. Verify I/O cabling connections.

6. Verify there is sufficient logic and field power for the modules in the module mounting unit.

## Address Selection Switch (S1)

The ASI module must have an address to communicate with the controller. The ASI module can have any one of 64 addresses (address 0 to 63) on the I/O expander bus. This address identifies the ASI module to the controller and must be the same as the address set in the controller configuration data (FCs 215 and 216, specification S1).

Set the address with the eight position address dipswitch S1 (Fig. 3-1). The six right switch positions (three through eight) of S1 set the six-bit address. Positions one and two must remain closed (set to zero) for normal operation (Fig. 3-2).

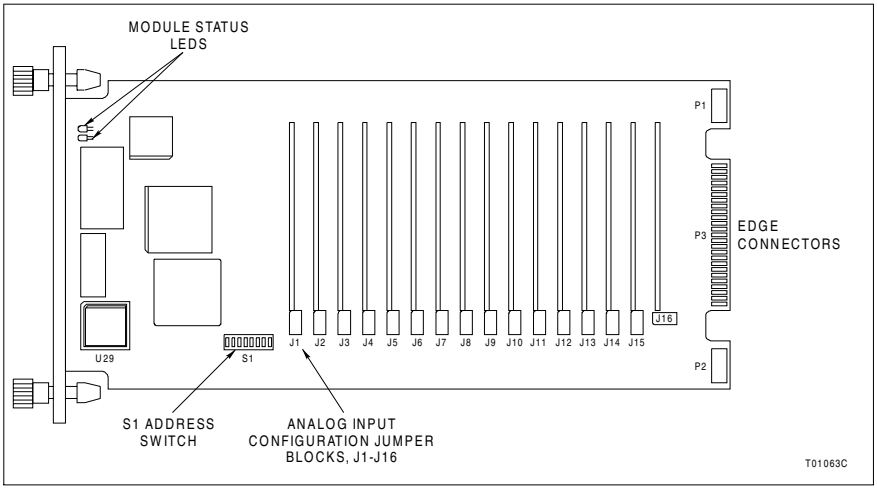


**Figure 3-1. Module Layout**

The address is set in binary format. Table 3-1 shows some example address settings for switch S1. Refer to Section 6 for the diagnostic settings. Record the I/O expander bus address of the ASI module in the space provided.

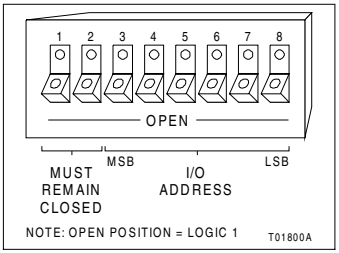


**Figure 3-2. S1 Switch**

**Table 3-1. Sample Address Switch Settings (S1)**

| Address Example | Switch Position[1,2] (Binary Value) | | | | | |
|---|---|---|---|---|---|---|
| | 3 (32) | 4 (16) | 5 (8) | 6 (4) | 7 (2) | 8 (1) |
| 08 | 0 | 0 | 1 | 0 | 0 | 0 |
| 32 | 1 | 0 | 0 | 0 | 0 | 0 |
| 63 | 1 | 1 | 1 | 1 | 1 | 1 |
| User setting | | | | | | |

**NOTES:**
1. Switch positions 1 and 2 must be closed.
2. 0 = closed or on, 1 = open or off.

## Configuring Inputs

Configure the ASI module by setting the specifications in FCs 215 and 216 in the controller and setting the input jumpers on both the ASI module and the termination unit. Refer to Section 4 for more information on configuration and calibration.

Each input on the ASI module has a jumper block. The jumper block has different ways it can be configured: millivolt, thermocouple, RTD, voltage and current. Jumper block J1 matches channel one, jumper block J5 matches channel five, jumper block J16 matches channel 16, etc. Each channel can be configured independently. The ASI module can have any number of inputs configured as resistance, low level voltage, or high level voltage.

Refer to figure 3-3 for the jumper block configurations.

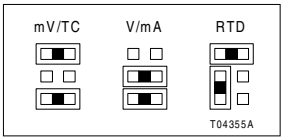


**Figure 3-3. Six Pin Jumper Block Configurations**

## Termination Unit Configuration

An NTAI06 termination unit connects the field device wiring to the Symphony system. The terminal blocks are located on the termination unit. Set up the termination unit to accept the analog field inputs sent to the IMASI23 module. Refer to Appendix A for the termination unit information.

## Physical Installation

**NOTE:** This section provides data on the physical installation of the analog input module only. For complete cable and termination module information, refer to Appendix A.

The IMASI23 module occupies one slot in a standard module mounting unit (MMU). To install the module:

1. Verify the slot placement of the module.

| | |
|---|---|
| **WARNING** | **Disconnect power before installing dipshunts on the MMU backplane. Failure to do so will result in contact with cabinet areas that could cause severe or fatal shock.** |

2. Verify that a dipshunt is in the I/O expander bus socket on the MMU backplane between the analog input module and controller.

3. Connect the hooded end of the cable from the termination unit to the MMU backplane. To do this, insert the connector into the backplane slot in the same slot as the one assigned to the analog input module. The latches should snap securely into place.

4. Align the module with the guide rails in the module mounting unit. Carefully slide the module in until the front panel is flush with the top and bottom of the MMU frame.

5. Push and turn the two captive latches on the module faceplate one half turn to the latched position. It is latched when the slots on the latches are vertical and the open ends face the center of the module. Refer to Figure 3-4.

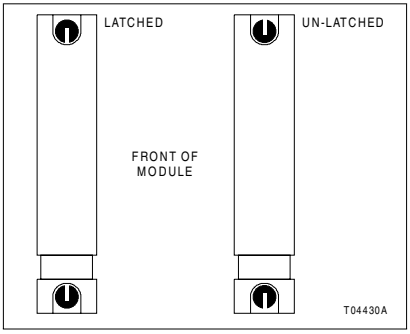


**Figure 3-4. Latched and Un-Latched Positions of Captive Latches**

# Wiring Connections and Cabling

The IMASI23 module has three card edge connectors to supply power (P1), connect I/O expander bus communication (P2), and provide analog inputs (P3).

## Wiring

Install the analog input module in the module mounting unit to connect the module to the +5 VDC voltages needed to power the circuits. The module mounting unit also connects P2 to the I/O expander bus for communication with the controller. P1 and P2 connection require no additional wiring or cabling.

**NOTE:** A dipshunt on the backplane of the module mounting unit connects the I/O expander bus between the ASI module and the controller. Locate the module so the bus can connect to them or they will not communicate.

## Cable Connections

The IMASI23 module uses one NTAI06 termination unit for termination. The NTAI06 requires an NKAS01 or NKAS11 cable to connect to the IMASI23 module. The cables have a Y configuration with two connectors on one end. Note the labeling of J2 and J3 to insure proper connection of the input signals. Figure 3-5 shows cable connections to the NTAI06 termination unit.

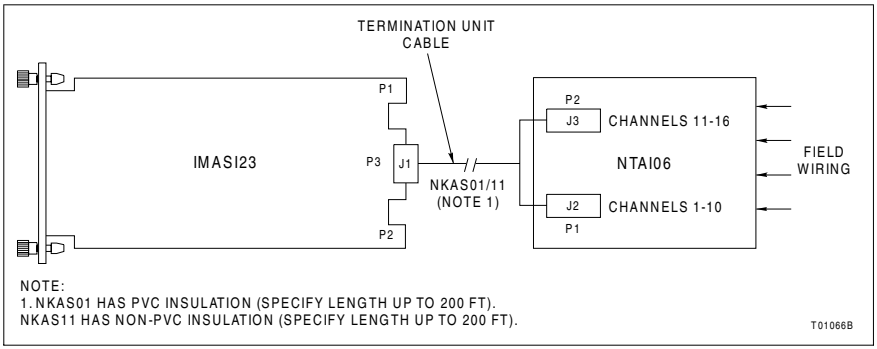


**Figure 3-5. Cable Connections**



# Configuration and Calibration

Section 4

## Introduction

This section explains the configuration and optional field calibration for the field inputs of the IMASI23 module (ASI).

Function codes in the controller configure the IMASI23 module and identify the active analog inputs. These function codes specify the I/O expander bus address of the ASI module and the number of active channels on the input module.

Module calibration is performed during module assembly at the factory. Circuitry and software in the module make automatic adjustments to compensate for application variations, component drift, and cold junction errors. The ASI module does provide for field calibration although it should not be required.

## Configuring Inputs

Configure the IMASI23 module by setting the specifications in FCs 215 and 216 in the controller. One FC 215 is required for each analog input module and one FC 216 is required for each channel used on the analog input module. Refer to Appendix A for more information on the NTAI06 termination unit.

## Configuring Function Codes

> **NOTE:** Refer to the ***Composer Function Code Application Manual*** for descriptions of FCs 215, 216, and 217.

The controller initializes the ASI module with the configuration data specified in FCs 215 and 216. The controller sends a command to the ASI module whenever new configuration data is entered in the controller configuration. This command causes the ASI module to read the configuration data and initialize its input processing, conversion, and compensation calculations.

FCs 215 and 216 are defined in the controller to configure the ASI module and identify the active analog inputs. These function codes specify the I/O expander bus address of the



IMASI23 module as well as the channel number on the analog input module connected to an analog input signal. The type of the input, as well as the zero and span in engineering units, must also be specified to insure proper scaling and corrections for field calibration or cold junction compensation. Function code specifications also contain the A/D resolution, lead wire resistance (if such a correction is desired), and primary frequency of the noise to be rejected by each input.

For cold junction compensation, the block which represents the cold junction input must also be specified. To use the analog input module's onboard cold junction reference, set specification S3 in FC 215 to the block address of FC 215.

Any channel can be used as a remote cold junction reference. In FC 216, specification S4, enter:

**1***xx*

The *xx*, which ranges from 01 to 99, specifies the input signal type.

When an input channel is selected as a remote cold junction reference, software smoothing of the input reading takes place. This smoothing allows the temperature response of the remote cold junction reference to closely match the temperature response of the remote terminal blocks.

Each ASI module configured for a thermocouple input requires a cold junction reference. Each ASI module can only have one cold junction reference for up to 16 thermocouple inputs. The exception to this is when one of the thermocouple inputs is used as a remote cold junction reference.

**NOTE:** All specifications in FCs 215, 216, and 217 associated with the IMASI23 can be changed during online configuration. When changes are made to the input channel parameters (FC 216), the channel will hold the last value with status unchanged for a short period. This hold time is based on the number of channels that were changed during online configuration, as well as the resolution specified in the FC 216 blocks for that channel. Plan on a hold time of four seconds (worst case) for each FC 216 changed during online configuration.

Define one FC 217 in the controller configuration in case ASI module tuning or field calibration operations are needed later.

# Calibrating Inputs

Calibration is done at the factory and the calibration data is stored on the IMASI23 module in nonvolatile memory. ***No field calibration is necessary.*** If, however, field calibration is desired, use the procedure described in ***Field Calibration*** in this section.

Field calibrate the ASI module with the controller by tuning FC 217. Refer to Appendix C for descriptions of FC 215, 216, and 217. It is necessary to define FC 215 and one FC 216 for each input channel in a configuration to field calibrate the ASI module. In addition, when field calibrating the module, the calibration type defined in S4 of FC 217 must be consistent with the input signal type defined in S4 of FC 216. Consider the following examples.

Example 1 If calibrating a channel for millivolts or thermocouples, then S4 of FC 217 must be set to zero and S4 of FC 216 must be set to any one of the millivolt or thermocouple input types. In this case, S4 of FC 216 must be within the following:

$x01 \leq S4 < x20$
***- or -***
$x60 \leq S4 < x99$

Example 2 If calibrating a channel for high level voltage, then S4 of FC 217 must be set to one and S4 of FC 216 must be set to one of the high level voltage ranges (4 to 20 milliamperes is considered high level input type). In this case, FC 216 should be within the following:

$x40 \leq S4 < x60$
***- or -***
$S4 = x99$

Example 3 If calibrating a channel for RTD mode, then S4 of FC 217 must be set to two and S4 of FC 216 must be set to any one of the RTD types. In this case, S4 of FC 216 should be within the following range:

$x20 \leq S4 < x40$

The operator starts, guides, and ends the field calibration with FC 217. Commands are initiated by tuning this block. The command errors are provided as an output (N+4) of this

function block. It reflects the status of the most recently issued calibration command.

The status of a channel field calibration is also reported as an output (N+1) of this function block. This output shows the status for the channel referenced in the most recent field calibration command.

## Field Calibration

***Field calibration is not necessary in normal situations.*** It is possible to perform calibration procedures in the field if ultra stable, known, precision references are available. Field calibration data is stored in nonvolatile memory.

Factory calibration data is stored in a unique nonvolatile memory area. If a field calibration does not provide the desired results, the factory calibration data can be restored. Do this by tuning specification S1 of FC 217 to 11.

Signal readings can be compensated by changing the gain or offset of the point signal. In most cases changing these values will take the place of a field calibration. Refer to FC 217, specification S5.

This is an example of a set user gain and offset operation:

| Function | FC 217 Specifications | | | | | |
|---|---|---|---|---|---|---|
| | S1 | S2 | S3 | S4 | S5 | S6[1] |
| Tune channel 1 offset and gain correction | 5 | 100 | 1 | 0 | gain value | offset value |
| Tune channel 2 offset and gain correction | 5 | 100 | 2 | 0 | | |

**NOTE:**
1. S7 and S8 are not used.

In this example the specifications have these functions:

- S1 selects the field calibration operation (five). The value of five is the set user gain and offset command.
- S2 is the block address of the FC 215 which corresponds to the IMASI23 module.
- S3 calls up the channel to be tuned (channel one).

- S4 sets the input type (zero equals millivolt).
- S5 sets the amount of gain. Set S5 to the gain value.
- S6 sets the offset value. Set S6 to the offset value.

Check block N+2 or block N+3 to see if the set user gain and offset command is processed correctly, and is incorporated into ASI module input reading of that channel and type.

**NOTE:** Field calibrating all 16 channels for all four input types on an IMASI23 module is a lengthy procedure that may require up to four hours to complete when done properly.

A channel can be disabled and field calibrated separately from the rest of the active channels on the ASI module. Each channel can be calibrated for any of the three input ranges:

- Individual channel low level voltage range (-100 to +100 millivolt).
- Individual channel high level voltage range (-10 V to +10 V).
- Individual channel three-wire resistance range (5 ohms to 500 ohms).

To field calibrate each of the four ranges:

1. Configure the point in the system.
2. Disable the point from the system.
3. Calibrate the point with the new value (two calibration points per channel and input type).
4. Enable the point to the system.

Before beginning calibration, each channel must be configured with one FC 216, and the calibration type defined in S4 of FC 217 must be consistent with the input signal defined in S4 of FC 216.

The input channel being field calibrated must be disabled before any calibration commands are accepted. Disabling the input channel removes the channel from the normal input scan processing. The point shows bad quality while it is disabled. The value of the input is undefined while the channel is disabled. All other channels are not affected and continue processing input data according to the configuration data.



Before performing a point field calibration, ultra stable, known, precise values are connected to the input channel. During point calibration, the ASI module reads the input and stores its digitized value. Two point calibrations within an input range must be performed. All these adjustment factors are calculated and stored in the ASI module's nonvolatile memory when the point is enabled.

Precision voltage values are required for low level, thermocouple, and high level input field calibration. For RTD input calibration, precision resistance values are used. FC 217 and the same procedure is used for all three field calibrations.

Each input channel must be enabled before normal input scan processing is resumed. The enable command indicates to the ASI module that the calibration process is completed. At that time the ASI module stores the field calibration values in nonvolatile memory. The module uses these values during input scan processing to calculate the correction factors for the calibrated channel.

If no field calibration is performed, or if the escape command was issued to cancel the calibration, the new calibration correction values are not computed and the previous correction factors will continue to be used. There is no change to the calibration of the point. The quality of the input point remains bad after an enable command until a successful input scan is performed for that point. If either the controller or the ASI module is stopped, or placed into configure mode while a field calibration sequence is in progress (before an enable is issued), the field calibration sequence is aborted and must be restarted.

Once the ASI module is calibrated, no further manual calibration is necessary. Onboard, low-drift references maintain the accuracy of the calibration.

## Procedure

The original ASI module calibration is performed in the factory in a controlled, stable environment. Ambient temperature must remain constant at 25 (±1.0) degrees C. The field calibration location must be free from drafts.

After each ASI module is powered-up in its calibration location, allow some warmup time before calibration for the most accurate results. This warmup time should be at least 15 minutes.

There are three types of inputs on the ASI module:

- Low level voltage range (-100 to +100 millivolt).
- High level voltage range (-10 V to +10 V).
- Three-wire resistance range (5 ohms to 500 ohms).

Each of the 16 inputs can be used as a high level, a low level, or a three-wire RTD input.

The high level, low level, and three-wire RTD inputs can be field calibrated with this procedure.

ABB Automation recommends checking the accuracy of the channel within each of the specified ranges after calibrating each channel.

## Test Equipment Required

The devices required to perform the field calibration are:

- One powered module mounting unit slot per ASI module (+5 V with power fail interrupt).
- One controller with I/O expander bus dipshunts.
- A controller interface device such as a Composer or Conductor workstation.
- An NKAS01 cable and its termination device (NTAI06).

Each input type to be field calibrated requires ultra-stable, known precision sources.

Low-Level Voltage Source

- -100 to +100 millivolt range with an accuracy of ±10 microvolts (or ±0.005 percent of this range).
- DC output resistance of less than 2.0 ohms.

High-Level Voltage Source

- -10 V to +10 V range with an accuracy of ±1.0 millivolt (or ±0.005 percent of this range).
- DC output resistance of less than 5.0 ohms.

Resistance Source

- 5.0 ohms to 500 ohms range with an accuracy of ±25 milliohms (or ±0.005 percent of specified range).

## Individual Channel Calibration

This section provides field calibration procedures for low level, high level, and resistance. To calibrate each channel in the module:

1. Configure the point in the system.
2. Disable the channel.
3. Calibrate the channel with two calibration points.
4. Enable the channel.

This example shows the values to tune the FC 217 specifications for a low level voltage range calibration for channel one on the ASI module referenced by the FC 215 at block address 100. S4 of FC 216 must also be set to any of the thermocouple or millivolt types.

| Function | FC 217 Specifications | | | | | |
|---|---|---|---|---|---|---|
| | S1 | S2 | S3 | S4 | S5 | S6 |
| Disable point | 1 | 100 | 1 | x[1] | x[1] | x[1] |
| Point calibration[2] | 2 | 100 | 1 | 0 | value | x[1] |
| Enable point | 3 | 100 | 1 | x[1] | x[1] | x[1] |

**NOTES:**
1. x is a do not care value.
2. Repeat this entry at least 2 times making specification 5 equal to the low voltage value applied to the input terminals. For maximum accuracy, up to 11 points may be identified for adjustment of input channel nonlinearities, resulting in 10 linear segments for correction.

This example shows the values to tune the specifications to in order to reset the channel field calibration data to the original factory settings for an ASI module at address one. This is needed only if the field calibration is unsuccessful.

| Function | FC 217 Specifications | | | | | |
|---|---|---|---|---|---|---|
| | S1 | S2 | S3 | S4 | S5 | S6 |
| Reset factory calibration | 11 | 100 | x[1] | x[1] | x[1] | x[1] |

**NOTE:**
1. x is a do not care value. It may be left at the previous value.

The following steps field calibrate channel one for the low level voltage range of -100 to +100 millivolt. Change specification S4

and use these steps to configure high level, or resistance inputs. Also S4 of FC 216 must be consistent with the type of calibration being performed.

1. Locate the block address in the controller of FC 217.

2. Verify that the I/O expander bus dipshunts are in place to allow ASI module bus communications.

3. On the ASI module, for each input channel, place the jumpers as shown in Figure 3-3.

4. Set S2 of FC 217 to the block address of the FC 215 which references the ASI module.

5. Insert the ASI module into a powered slot. The green LED will be solid indicating the module is linked to a FC 215 in the configuration.

6. Allow the ASI module to warm up for at least 15 minutes.

7. Put the controller in execute mode.

8. Set FC 217 for the required specifications. After each calibration command is issued by performing a tune operation, monitor the calibration command status to determine if any errors have occurred during the field calibration.

This example calibrates channel one on the ASI module which is referenced by the FC 215 at block address 100. For low level voltage, disable the desired channel by tuning these values into the specifications.

   a. Disable point (S1 = 1).

   b. ASI module referenced by FC 215 at block address 100 (S2 = 100).

   c. ASI module channel one (S3 = 1).

9. Verify that the low level voltage source is connected to channel one of the ASI module to be calibrated and the source voltage is set to the full scale value (+100 millivolt).

**NOTE:** Each time the source voltage is changed, at least 15 seconds settling time is required before the point field calibration takes place. If the source itself has a measurable settling time, add this to the 15 second requirement.



10. Tune FC 217, specification S5 to the input voltage or resistance value. For this example, tune these specifications:

a. Perform point calibration (S1 = 2).

b. ASI module referenced by FC 215 at block address 100 (S2 = 100).

c. ASI module channel one (S3 = 1).

d. Calibration type zero (low level) (S4 = 0).

e. Calibration parameter 1 - 100 (millivolts) (S5 = 100).

Successful field calibration operations can be verified by checking for a zero value in FC 217, output N+1 and N+4. If the point calibration was unsuccessful, an error code will appear in the FC 217, outputs N+1 and N+4 which can aid in troubleshooting.

11. Successful field calibration operations can be verified by checking for a zero value in FC 217, outputs N+1 and N+4 for a zero value. If the point calibration was unsuccessful, an error code will appear in the FC 217, outputs N+1 and N+4 which can aid in troubleshooting.

At this step, two points have been field calibrated (0 and full scale) and the enable calibration command can be executed. The three input ranges are low level, high level, or RTD.

If desired, repeat Steps 7 through 10 for channels 2 through 16 to calibrate all 16 channels on the ASI module.

12. Enable the point. Tune the FC 217, specification S1 to enable the channel. For this example, tune these specifications:

a. Enable the channel (S1 = 3).

b. ASI module referenced by FC 215 at block address 100 (S2=100).

c. ASI module channel one (S3 = 1).

d. Calibration type x (S4 = x). x is a do not care value.

e. Calibration parameter x (S5 = x).

A successful enable operation can be verified by checking FC 217, outputs N+1 and N+4 for a zero value. If the enable was unsuccessful, an error code will appear in the FC 217, outputs N+1 and N+4 which can aid in troubleshooting.



# Operating Procedures



Section 5

## Introduction

This section explains the startup and operation of the IMASI23 module (ASI).

## Startup

Communication between the ASI module and controller starts when the two modules are configured correctly (refer to Section 4). The ASI module address in FCs 215 and 216 must be the same as the address set on the address dipswitch.

Upon startup, when power is applied to the ASI module and the controller is put into execute mode, all channels are initially marked bad quality until the controller downloads the configuration data and the ASI module processes a valid input signal.

## Operation

The controller sends an interrupt command to the ASI module whenever it sends new configuration data. This interrupt causes the ASI module to read the configuration data and initialize its input handling, conversion, and compensation calculations. Once configured by the controller, the ASI module scans its inputs and makes corrected values available to the controller over the I/O expander bus. The controller reads the values from the ASI module during its normal segment cycle operations. Refer to Section 2 for more information about ASI module theory of operation.



# Status LEDs

The IMASI23 module has two LEDs, one red and one green, that show its operating status.

- Red flashes on power up.
- Both remain off after passing onboard diagnostics until the ASI module is configured by the controller.
- Green is solid after the controller downloads configuration data.
- Green is solid during normal running.
- Blinking green when the controller that configured the ASI module enters configure mode from execute mode.
- Blinking green if I/O expander bus communication is lost (if the controller is removed).
- Red is solid if a fatal failure of the ASI module occurs. For example, if power up diagnostics fail.
- Red is solid for a power fail interrupt (PFI).

# Troubleshooting



Section 6

## Introduction

This section explains the error signs and corrective actions for the IMASI23 module (ASI).

## Status LEDs

The IMASI23 module has two LEDs, one red and one green, that show its operating status. Refer to ***Status LEDs*** in Section 5 for a description of their operation.

## Alarm and Exception Reporting

No alarm or exception reports are generated directly by the function codes associated with the IMASI23 module. The values from the ASI module must be sent to a standard exception reporting block if exception reporting is required. Refer to the instruction for the human system interface (i.e., console) being used for more information.

## Problem Reports

Problem reports generated by FCs 215 and 216 are ASI module error reports (report type 12). FCs 215 and 216 generate five kinds of error messages.

- No response/wrong type (error type 1).
- Calibration error (error type 2).
- Channel failure/out of range (error type 3).
- Calibration (error type 14).
- Configuration mismatch (error type 7).

Problem reports are generated in response to three types of errors detected by the function codes.

- For a communication failure, if any message read by the controller from the ASI module fails.



- If the detailed module status read from the ASI module by the controller indicates any error conditions.
- If the channel status for any configured channel indicates an error.

Table 6-1 contains the error types generated for each error.

**Table 6-1. IMASI23 Error Types**

| Module Problem Report Type 12 | | | |
|---|---|---|---|
| **Error Type** | **Error Description** | **Analog Input Module Error** | **Corrective Actions** |
| 14 | Calibration (0EH) problem report (from FC 216) | Channel 1-16 disabled | Remove IMASI23 and reinsert. If error recurs, replace the IMASI23. |
| | Calibration (0EH) problem report (from FC 215) | Cold junction disabled | |
| | Calibration (0EH) problem report (from FC 216) | Channel 1-16 not calibrated | |
| | Calibration (0EH) problem report (from FC 215) | Cold junction not calibrated | |
| 7 | Configuration mismatch problem report (from FC 216) | Channel not configured | Verify that Specs S3 through S9 of the indicated FC 216 are correct. |
| 3 | Channel failure/out of range (03H) problem report (from FC 216) | Channel 1-16 out of range error | Possible open input or signal is out of range. Verify field wiring, connections, sensor and module seating. |
| | Channel failure/out of range (03H) problem report (from FC 215) | Cold junction out of range error | |
| | Channel failure/out of range (03H) problem report (from FC 216) | External cold junction reference error | Verify quality of block defined for Spec S3. |
| | Channel failure/out of range (03H) problem report (from FC 216) | Channel 1-16 A/D conversion error | Remove IMASI23 and reinsert. If error recurs, replace the IMASI23. |
| | Channel failure/out of range (03H) problem report (from FC 215) | Cold junction A/D conversion error | |

**Table 6-1. IMASI23 Error Types** *(continued)*

| Module Problem Report Type 12 | | | |
|---|---|---|---|
| **Error Type** | **Error Description** | **Analog Input Module Error** | **Corrective Actions** |
| 2 | Calibration (02H) problem report (from FC 215) | Unconfigured reference error | Cold junction reference is not zero and has bad quality. Unconfigured channel reference error (unused channel not functioning properly). The I/O module and all configured channels will continue to function properly. |
| | Calibration error (02H) problem report (from FC 215) | Cold junction reference error | |
| | Calibration error (02H) problem report (from FC 216) | Channel 1-16 reference error | Remove IMASI23 and reinsert. If error recurs, replace the IMASI23. |
| 1 | No response/wrong type (01H) problem report (from FC 215) | Any communication failure. Any command or data failure | |
| | No response/wrong type (01H) problem report (from FC 215) | NVRAM error | |
| | No response/wrong type (01H) problem report (from FC 215) | Analog input module A/D reference error | |
| | Calibration error (01H) problem report (from FC 215) | Analog input module not calibrated | |
| | No response/wrong type (01H) problem report (from FC 216) | Channel 1-16 I/O expander bus error | Remove IMASI23 and reinsert. If error recurs, replace the IMASI23. |
| | No response/wrong type (01H) problem report (from FC 215) | Cold junction I/O expander bus error | |

# Error Messages and Corrective Actions

## Input Channel Status

The ASI module maintains a fixed area in the dual port RAM to store the current value and status of each channel. The controller reads the data and status for each channel individually.

To view the status of the IMASI23 module, read block output N+1 of FC 215. Check the input status on each point individually by looking at the corresponding FC 216 output quality.



Use any human system interface such as a workstation running Conductor software.

## Analog Input Module Errors

ASI module errors are reported to the controller through FC 215 for module errors and FC 216 for active input channels. The controller indicates ASI module errors through module status when in the execute mode. Byte one of the module status will indicate an error and byte two of the module status will indicate LIO (local I/O) when there is an ASI error.

When specification S4 in FC 215 is set to one, the controller will continue to execute if FC 215 detects an error. A module problem report can be requested in order to get specific information about any ASI module error indicated in module status. When specification S4 in FC 215 is set to zero, the controller enters error mode if FC 215 detects an error. If an error occurs, module status byte one will indicate an error, byte two will indicate LIO, and byte three will indicate the specific error. Refer to Table 6-2. For example, analog input reference error is indicated by a two and missing I/O is indicated by a three in byte three.

**Table 6-2. Module Status (Byte 3) Error Codes**

| Error Code | Error Message | Description | Corrective Actions |
|---|---|---|---|
| 2 | AI Reference Error | Indicated FC 215 block failed due to an IMASI23 A/D system reference error. | Remove IMASI23 and reinsert. If error recurs, replace the IMASI23. |
| 3 | Missing I/O | Indicated FC 215 block failed due to a communication error with the IMASI23. | Remove IMASI23, verify expander bus dip shunt, verify IMASI23 module address is same as FC 215 Spec S1. Reinsert IMASI23 and verify proper seating. If error recurs, call ABB Automation field service. |
| | | Indicated FC 215 block detected an IMASI23 error. (IMASI23 module firmware has reported an error.) | |

**Table 6-2. Module Status (Byte 3) Error Codes** *(continued)*

| Error Code | Error Message | Description | Corrective Actions |
|---|---|---|---|
| 5 | Configuration Error - Undefined Input | Indicated FC 215 or FC 216 detected a function code channel link error:<br>Too many FC 216 blocks in link (greater than 16 channels defined for IMASI23).<br>A circular link, an FC 216 block appears more than once in the channel link list[1].<br>A FC 216 block in the channel link list has a different module address than the linked FC 215 block.<br>An incorrect block number is in the channel link list[1].<br>IMASI23 channel number defined more than once (two FC 216 blocks with the same channel number). | Verify FC 215 spec values and all linked FC 216s are correct. |
| | | Indicated FC 215 has an incorrect CJR block number. | Verify FC 215 Spec S3 points to the correct block. |

**NOTE:**
1. Link list is a chained series of function code blocks. FC 215 is the first block in the series. FC 215 links to the first of up to 16 FC 216 blocks.

When the controller goes from configure mode to execute mode and there is a configuration error, the controller will enter error mode and byte three of the module status will indicate a five for configuration error - undefined input.

If the controller goes into error mode, module status byte three may contain a two, three, or five. A two indicates AI reference error, a three indicates Missing I/O, and a five indicates configuration error - undefined input.

If the controller goes into error mode and module status byte three contains a two, three, or five, look at module status bytes four and five for the block number of the function code detecting the error. Block four contains the two most significant digits and block five contains the two least significant digits of the



error block. For example, if byte four contains a 10 and byte five contains a 42, then block 1042 contains the error.

For more information on module status, refer to the appropriate controller instruction.

## Error Example

FC 215 for the ASI module and 216 for the active channel need the same address. Check that the address on ASI switch S1; the address in FC 215, specification S1; and FC 216, specification S1 are the same.

If the module address in FC 216 is not the same as in FC 215, the controller will enter error mode when attempting to go to execute mode. The error will indicate five, (byte three of module status/error message equal to 05) configuration error - undefined input.

Modify the address in FC 215 and the associated FC 216 blocks. The ASI address value set in FC 215, specification S1 and FC 216, specification S1 should match the ASI module address set on S1.

Use a human system interface to change the configuration data. For procedures on how to change a function code specification, refer to the appropriate instruction for the human system interface being used.

The controller generates a local I/O error in the module status if the I/O expander bus is not connected between the ASI module and the controller. Verify that the bus is connected on the MMU backplane.

> **NOTE:** Setting FC 215, specification S4 to zero will cause the controller to ***trip*** when the IMASI23 module fails. Changing specification S4 to a one causes the controller to ***continue*** to operate if the IMASI23 fails or is missing.

If both the FCs 215 and 216 have the wrong address, the controller status will indicate a local I/O error. To correct this:

1. Remove the ASI module and change the setting of S1 to match the controller configuration settings.

2. Refer to Section 3 for information on setting an address and installing an ASI module.

## I/O Expander Bus Interface Test

The I/O expander bus test checks for proper operation of the following interface components.

- I/O expander bus interface.
- Dual port static RAM (ASI module read/writes and controller read/writes).
- Controller and ASI module handshaking.

Perform the following steps to check I/O expander bus interface operation:

1. Tune specification S1 of FC 217 to 10 indicating I/O expander bus test. Also, tune specification S2 to the block address of the ASI module's FC 215. Set all other specifications to the default value and send this block.

2. Monitor FC 217, output N+4 to determine the status of the I/O expander bus.

   If block N+4 is 0000, the test is successful.

   If block N+4 is 2000, the test has failed (data passed back was incorrect).

For more information on FC 217 errors, refer to the ***Composer Function Code Application Manual***. The functional test is complete. If the IMASI23 module does not function properly, return it for repair.

## Module Pin Connections

This section shows the pin connections for the IMASI23 module. The analog input module has three connection points for external signals and power (P1, P2 and P3). Table 6-3 shows the pin connections for P1. Table 6-4 shows the pin connections for P2. Table 6-5 shows the pin connections for P3.



**Table 6-3. P1 Power Connections**

| Pin | Signal | Pin | Signal |
|---|---|---|---|
| 1 | +5 VDC | 7 | Not used |
| 2 | +5 VDC | 8 | Not used |
| 3 | Not used | 9 | Power fail interrupt |
| 4 | Not used | 10 | Not used |
| 5 | Common | 11 | Not Used |
| 6 | Common | 12 | Not Used |

**Table 6-4. P2 Expander Bus Connections**

| Pin | Signal | Pin | Signal |
|---|---|---|---|
| 1 | Data 1 | 7 | Data 7 |
| 2 | Data 0 | 8 | Data 6 |
| 3 | Data 3 | 9 | Clock |
| 4 | Data 2 | 10 | Sync |
| 5 | Data 5 | 11 | Not Used |
| 6 | Data 4 | 12 | Not Used |

**Table 6-5. P3 Input Signal Connections**

| Pin | Signal | Pin | Signal |
|---|---|---|---|
| 1 | RTD- | 26 | RTD+ |
| 2 | IN1+ | 27 | IN1- |
| 3 | COM1 | 28 | COM2 |
| 4 | IN2- | 29 | IN2+ |
| 5 | IN3+ | 30 | IN3- |
| 6 | COM3 | 31 | COM4 |
| 7 | IN4- | 32 | IN4+ |
| 8 | IN5+ | 33 | IN5- |
| 9 | COM5 | 34 | COM6 |
| 10 | IN6- | 35 | IN6+ |
| 11 | IN7+ | 36 | IN7- |
| 12 | COM7 | 37 | COM8 |
| 13 | IN8- | 38 | IN8+ |
| 14 | IN9+ | 39 | IN9- |
| 15 | COM9 | 40 | COM10 |
| 16 | IN10- | 41 | IN10+ |
| 17 | IN11+ | 42 | IN11- |
| 18 | COM11 | 43 | COM12 |
| 19 | IN12- | 44 | IN12+ |
| 20 | IN13+ | 45 | IN13- |
| 21 | COM13 | 46 | COM14 |
| 22 | IN14- | 47 | IN14+ |
| 23 | IN15+ | 48 | IN15- |
| 24 | COM15 | 49 | COM16 |
| 25 | IN16- | 50 | IN16+ |



# Maintenance

Section 7

## Introduction

The reliability of any stand-alone product or control system is affected by the maintenance of the equipment. ABB Automation recommends that all equipment users practice a preventive maintenance program that will keep the equipment operating at an optimum level.

This section presents procedures that the customer should be able to perform on site. These preventive maintenance procedures should be used as a guideline to assist in establishing good preventive maintenance practices.

Personnel performing preventive maintenance should meet the following qualifications.

- Maintenance personnel should be qualified electrical technicians or engineers that know the proper use of test equipment.
- Maintenance personnel should be familiar with the IMASI23 module, module mounting unit, have experience working with process control systems, and know what precautions to take when working on live AC/DC systems.

## Preventive Maintenance Schedule

Table 7-1 is the preventive maintenance schedule for the IMASI23 module. The table lists the preventive maintenance tasks in groups according to their specified maintenance interval. Instructions for tasks that require further explanation are covered under ***Preventive Maintenance Procedures***.

**NOTE:** The preventive maintenance schedule is for general purposes only. Your application may require special attention.



**Table 7-1. Preventive Maintenance Schedule**

| Task | Frequency |
|---|---|
| Check cabinet air filters. Clean or replace them as necessary. Check the air filter more frequently in excessively dirty environments. | 3 months |
| Check cabinet and module for dust. Clean as necessary using an antistatic vacuum. | |
| Check all module signal, power and ground connections within the cabinet. Verify that they are secure. Refer to procedure. | |
| Check module circuit board, giving special attention to power contacts and edge connectors. Clean as necessary. Refer to procedure. | 12 months |
| Complete all tasks in this table. | Shutdown |

## Equipment and Tools Required

The tools and equipment required for maintenance procedures are:

- Antistatic vacuum.
- Screwdriver (medium length).
- Isopropyl alcohol (99.5 percent electronic grade).
- Distilled water.
- Compressed air.
- Foam tipped swabs.
- Lint free cloths.
- Nonabrasive eraser.

## Preventive Maintenance Procedures

**WARNING**

**Disconnect power from the source or take precautions to ensure that contact with energized parts is avoided when performing these procedures. Failure to follow this warning constitutes an electrical shock hazard that can injure personnel and damage equipment.**

**Wear eye protection whenever working with cleaning solvents. When removing solvents from printed circuit boards using compressed air, injury to the eyes could result from splashing solvent as it is removed from the printed circuit board.**

This section covers tasks from Table 7-1 that require specific instructions or further explanation.

- Cleaning printed circuit boards and edge connectors.
- Checking signal, power and ground connections.

## Printed Circuit Board Cleaning

There are several circuit board cleaning procedures in this section. These procedures cover circuit board cleaning and washing, cleaning edge connectors and circuit board laminate between edge connectors. Use the procedures that meet the needs of each circuit board. Remove all dust, dirt, oil, corrosion or any other contaminant from the circuit board.

Do all cleaning and handling of the printed circuit boards at static safe work stations. Always observe the steps under ***Special Handling*** in Section 3 when handling printed circuit boards.

### General Cleaning and Washing

If the printed circuit board needs minor cleaning, remove dust and residue from the printed circuit board surface using clean, dry, filtered compressed air or an antistatic field service vacuum cleaner.

To wash the printed circuit board:

1. Clean the printed circuit board by spraying or wiping it with isopropyl alcohol (99.5% electronic grade). Use a foam tipped swab to wipe the circuit board.

2. Remove excess solvent by using compressed air to blow it free of the circuit board.

### Edge Connector Cleaning

1. Use a solvent mixture of 80% isopropyl alcohol (99.5% electronic grade) and 20% distilled water.

2. Soak a lint free cloth with the solvent mixture.

3. Work the cloth back and forth parallel to the edge connector contacts.

4. Repeat with a clean cloth that is soaked with the solvent mixture.



5. Dry the edge connector contact area by wiping with a clean lint free cloth.

To clean tarnished or deeply stained edge connector contacts:

1. Use a nonabrasive eraser or equivalent to remove tarnish or stains. Fiberglass or nylon burnishing brushes may also be used.

2. Minimize electrostatic discharge by using the 80/20 isopropyl alcohol/water solution during burnishing.

3. Do not use excessive force while burnishing. Use only enough force to shine the contact surface. Inspect the edge connector after cleaning to assure no loss of contact surface.

4. Wipe clean with a lint free cloth.

## Checking Connections

**NOTE:** Power to the cabinet should be off while performing this preventive maintenance task.

**WARNING**

**There are exposed AC and DC connections inside the cabinet. These exposed electrical connections present a shock hazard that can cause injury or death.**

**If input or output circuits are a shock hazard after disconnecting system power at the power entry panel, then the door of the cabinet containing these externally powered circuits must be marked with a warning stating that multiple power sources exist.**

Check all signal wiring, power and ground connections within the cabinet to verify their integrity. When checking connections, always turn a screw, nut or other fastening device in the direction to tighten only. If the connection is loose, it will be tightened. If the connection is tight, the tightening action will verify that it is secure. There must not be any motion done to loosen the connection.

1. Verify that all power connections within the cabinet are secure.

2. Verify that all wiring connections to the termination unit, or termination module are secure.

# Repair and Replacement



Section 8

## Introduction

This section explains the replacement steps for a IMASI23 module (ASI). There are no special tools required to replace an ASI module.

**NOTE:** Refer to Appendix C for information about replacing an IMASI03 or Appendix B on an IMASI13 module with an IMASI23 module.

## Module Repair and Replacement

If the ASI module is faulty, replace it with a new one. ***Do not*** try to repair the module; replacing components may affect the module performance. Modules can be removed while system power is supplied. To replace a module:

1. Push and turn the two front panel captive latches one half turn to unlatch the module. It is unlatched when the slots on the latches are vertical and the open end of the slots face away from the center of the module. Refer to Figure 3-4.

2. Gently slide the module out of the module mounting unit (MMU).

3. Configure the replacement module switch and jumper settings. Ensure they are set the same as the original module.

4. In the same slot assignment as the original module, align the replacement module with the guide rails in the module mounting unit. Gently slide it in until the front panel is flush with the top and bottom of the MMU frame.

5. Push and turn the two captive latches on the module faceplate one half turn to the latched position. It is latched when the slots on the latches are vertical and the open ends face the center of the module.

6. Return to normal operation.



# NTAI06 Termination Unit

Appendix A

## Introduction

The IMASI23 module (ASI) uses one NTAI06 termination unit for termination. Jumpers on the termination unit configure each of the 16 analog inputs for either system powered 4 to 20 milliamperes, external powered 4 to 20 milliamperes, three-wire RTD, differential voltage, or single ended voltage.

NTAI06 termination units with both revision A and revision B hardware are in service. This section contains information on revision A and B units (refer to Figure A-1 and A-2).

## Cold Junction Reference Input

Each NTAI06 termination unit has a pair of RTDs which measure the temperature of the termination unit. This temperature is used to compensate for the cold junction effect on thermocouple inputs.

When using the built-in cold junction reference, the termination unit covers should be in place. The cover encloses both the terminal blocks and the RTD. It helps maintain the same temperature around the terminal blocks and the RTD. Maintaining both at the same temperature allows maximum accuracy for thermocouple inputs.

To apply the built-in cold junction reference for thermocouple inputs, refer to function code 215 specifications and block outputs in the ***Composer Function Code Application Manual***.

## Configuring Inputs

Jumpers on the termination unit configure the 16 analog inputs. Table A-1 lists the inputs that the NTAI06 unit accepts. Table A-2 lists the jumper configurations for the NTAI06 unit. Table A-3 describes the NTAI06 input types.

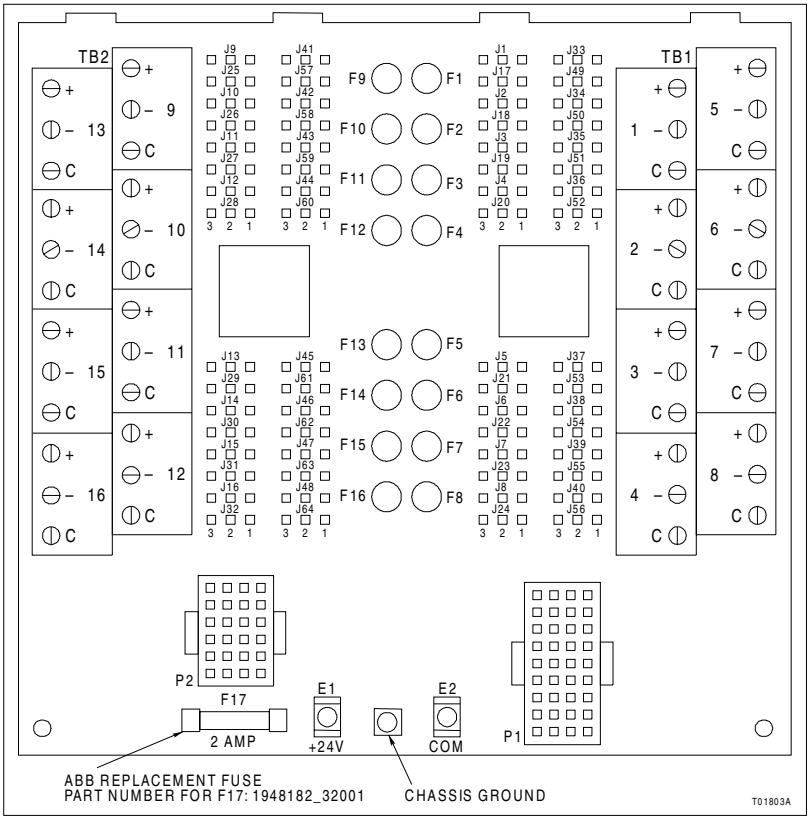


**Figure A-1. NTAI06 Layout (Rev A Hardware)**

Figure A-1 shows the jumper locations and terminal assignments for revision A hardware. Check jumpers before installing the NTAI06. Figure A-2 shows the jumper locations and terminal assignments for revision B hardware. Check jumpers before installing the NTAI06.

Figure A-3 shows a typical input circuit and the jumpers used for each input. Figure A-4 shows field input termination examples for revision A and B hardware. Figure A-5 shows IMASI23 input examples.

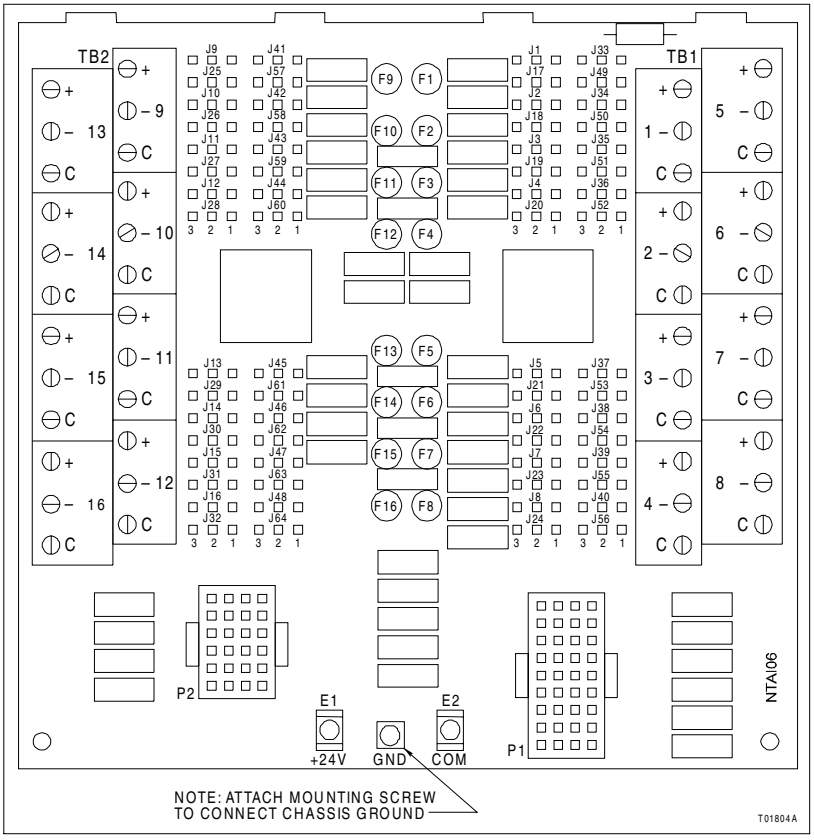


**Figure A-2. NTAI06 Layout (Rev B Hardware)**

**Table A-1. NTAI06 Input Types**

| Input Type | Signal Type |
|---|---|
| Thermocouple | B, E, J, K, L, N (14 AWG), N (28 AWG), R, S, T, U Chinese E, Chinese S |
| Millivolt | -100 to +100 mV |
| High level | -10 V to +10 V |



**Table A-1. NTAI06 Input Types** *(continued)*

| Input Type | Signal Type |
|---|---|
| Current | 4 to 20 mA, external or system powered |
| 3-wire RTD | Resistance range: 0 to 500 Ω<br>RTDs: 10, 100, 120 Ω<br>Chinese 53 Ω (3-wire) |

**Table A-2. NTAI06 Jumper Configurations**

| Input Type | Jumper Number | | |
|---|---|---|---|
| | J1 - J32 | J33 - J48 | J49 - J64 |
| Single ended voltage | 1 - 2 | 1 - 2 | 2 - 3 |
| Differential voltage | 1 - 2 | 1 - 2 | 1 - 2 |
| System powered 4 to 20 mA | 2 - 3 | 2 - 3 | 2 - 3 |
| External powered 4 to 20 mA | 1 - 2 | 2 - 3 | 1 - 2 |
| 3-wire RTD | 1 - 2 | 1 - 2 | 1 - 2 |

**NOTE:** Jumpers used by each input channel are listed with the terminal assignments in Figure A-3.

Figure A-6 shows the cabling for the IMASI023 module. The NKAS01 (or NKAS11) cable connects the termination unit to the IMASI03. The NKAS01 cable has PVC insulation and is rated for 80° C (0 to 176° F) at 300 V (UL rated type CL2). The NKAS11 cable has non-PVC insulation and is rated for 90° C (0 to 194° F) at 300 V (UL rated type PLTC).

**NOTE:** The example in Figure A-4 is an NTAI06 termination unit with revision B hardware.

**Table A-3. NTAI06 Input Type Descriptions**

| Input Type | Input Description |
|---|---|
| Single ended voltage | This jumper configuration connects the minus (-) input terminal to I/O COM on the NTAI06. The IMASI23 measures the voltage at the plus (+) input terminal with respect to the C terminal. No connection to the C terminal is necessary. |
| Differential voltage | This jumper configuration connects the plus (+) and minus (-) inputs directly to IMASI23 differential input. Channel to channel and channel to system signal isolation is achieved for all voltage input types, including high level voltage, millivolts and thermocouples. No connection to the C terminal is necessary. |
| System powered 4-20 mA | This jumper configuration connects the plus (+) input terminal to system +24 VDC through a fuse on the NTAI06. The minus (-) input terminal connects to a precision resistor that generates a single ended voltage (1 to 5 V) for the IMASI23 to measure. No connection to the C terminal is necessary. INFI 90 OPEN must have +24 Volts (system power) installed. |

**Table A-3. NTAI06 Input Type Descriptions** *(continued)*

| Input Type | Input Description |
|---|---|
| External powered 4-20 mA | This jumper configuration connects the plus (+) input terminal to one end of a precision resistor and the minus (-) input to the other end of the same precision resistor located on the NTAI06. An isolated 1 to 5 Volts is generated for the IMASI23 to measure. No connection to the C terminal is necessary. |
| 3-wire resistance | This jumper configuration connects the plus (+) and minus (-) inputs and the COM input directly to IMASI23 three-wire input. Channel to channel and channel to system signal isolation is maintained. The two common leads of the RTD element should be connected across the plus (+) and common (C) terminals, and the third lead should be connected to the minus (-) terminal. |

**NOTES:** Compatibility Considerations

1. Installations using IMASI13 modules may have jumpers added between the minus (-) and the C terminals on the Termination Units for the thermocouple inputs. When replacing these IMASI13 modules with the IMASI23, the jumpers on the Termination Units do not have to be removed if using the inputs for thermocouples, millivolt, volt or milli-amp inputs.

2. If there are jumpers added between the minus (-) and the C terminals on the Termination Units, they must be removed if the inputs are to be configured for RTD input.

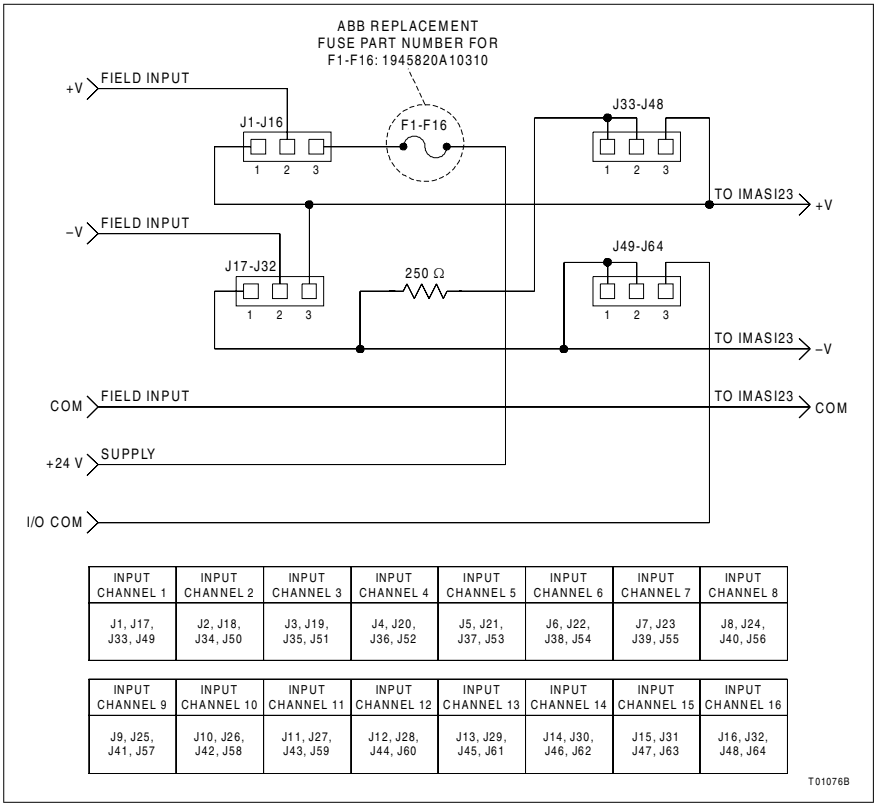


| INPUT CHANNEL 1 | INPUT CHANNEL 2 | INPUT CHANNEL 3 | INPUT CHANNEL 4 | INPUT CHANNEL 5 | INPUT CHANNEL 6 | INPUT CHANNEL 7 | INPUT CHANNEL 8 |
|---|---|---|---|---|---|---|---|
| J1, J17, J33, J49 | J2, J18, J34, J50 | J3, J19, J35, J51 | J4, J20, J36, J52 | J5, J21, J37, J53 | J6, J22, J38, J54 | J7, J23 J39, J55 | J8, J24, J40, J56 |

| INPUT CHANNEL 9 | INPUT CHANNEL 10 | INPUT CHANNEL 11 | INPUT CHANNEL 12 | INPUT CHANNEL 13 | INPUT CHANNEL 14 | INPUT CHANNEL 15 | INPUT CHANNEL 16 |
|---|---|---|---|---|---|---|---|
| J9, J25, J41, J57 | J10, J26, J42, J58 | J11, J27, J43, J59 | J12, J28, J44, J60 | J13, J29, J45, J61 | J14, J30, J46, J62 | J15, J31 J47, J63 | J16, J32, J48, J64 |

**Figure A-3. NTAI06 Input Circuit**

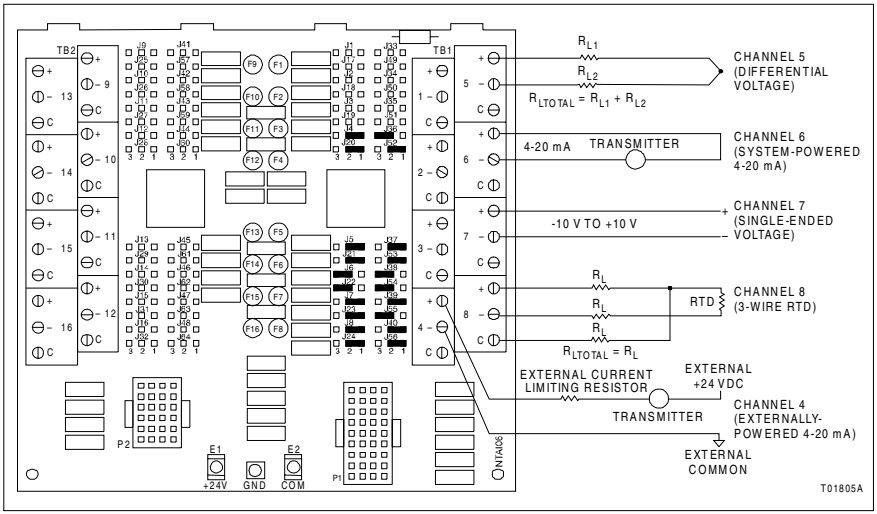


**Figure A-4. NTAI06 Field Input Termination Examples**

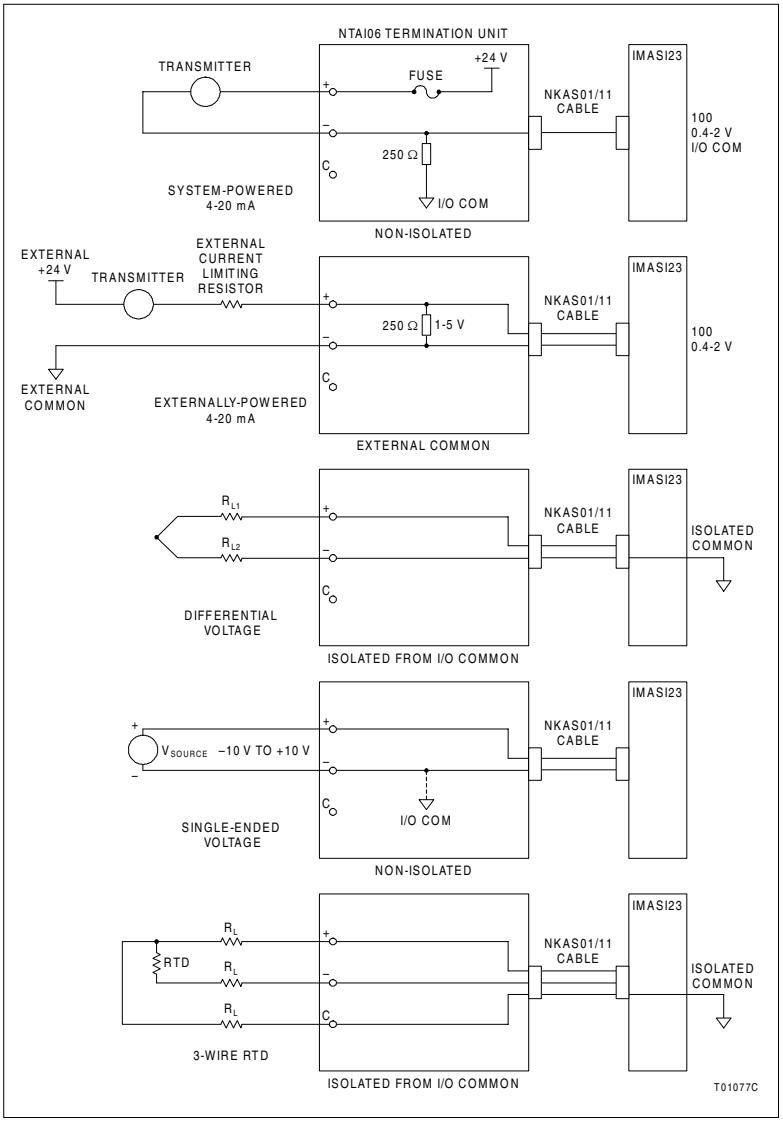


**Figure A-5. IMASI23 Input Examples**

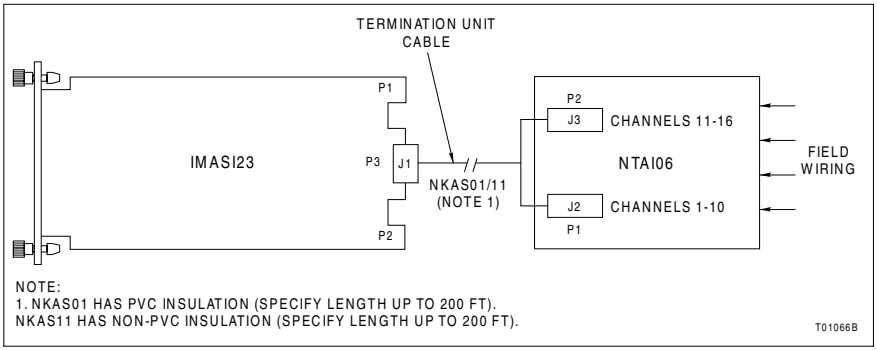


**Figure A-6. NTAI06 Cable Connection**



# Replacing an IMASI13 Module

# Appendix B

## Introduction

The IMASI13 module and the IMASI23 module are similar. The minimal differences are discussed in this section.

## User Differences

The only user differences between the IMASI23 and the IMASI13 is the input configuration jumper blocks J1-J16. The IMASI13 has 4 pin jumper blocks, where the IMASI23 has 6 pin jumper blocks. Refer to Figures B-1 and B-2. The additional jumper pins in the IMASI23 allow the Input(-) to be connected to that input's isolated common COM, which is required for proper operation of open thermocouple detection on the IMASI23. Refer to ***Configuring Inputs*** in Section 3, for proper jumper settings for the IMASI23.

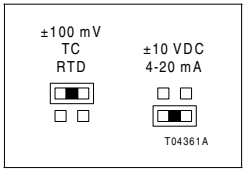


**Figure B-1. IMASI13 Four Pin Jumper Block Configuration**

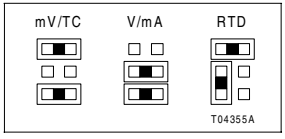


**Figure B-2. IMASI23 Six Pin Jumper Block Configuration**

Thermocouple, Millivolt or Milliamp Inputs

An installation using an IMASI13 module may have jumpers added between the minus (-) and the C terminals in the NTAI06 Termination Unit for thermocouple inputs. When replacing the IMASI13 module with an IMASI23, the jumpers on the Termi-



nation Unit do not have to be removed if using the input for a thermocouple, millivolt or milliamp inputs.

RTD Input

If there are jumpers added between the minus (-) and the C terminals on the NTAI06 Termination Unit, they must be removed if the inputs are to be configured for RTD input.

## Power Consumption Comparison

IMASI13 and IMASI23 module:

- 500 mA at +5 VDC

# Replacing an IMASI03 Module



# Appendix C

## Introduction

There are two differences between the IMASI03 modules and the IMASI23 module, resolution/scan time and power consumption. Once these two factors are taken into consideration, the IMASI23 module can be used as a direct replacement for the IMASI03 module.

The IMASI03 module resolution for the analog to digital conversion for each independent channel can be set at 16, 18, 20, 22, and 24. For the IMASI23 module, the resolution for each channel is 24 bits only.

## User Differences

The only user differences between the IMASI23 and the IMASI03 is the input configuration jumper blocks J1-J12. Refer to Table C-1. The IMASI03 has two sets of 3 pin jumper blocks, where the IMASI23 has 6 pin jumper blocks. Refer to Figures C-1 and C-2.

**Table C-1. IMASI03 Jumpers Used for Each Channel**

| Channel Number | 1 | 2 | 3 | 4 | 5 | 6 | 7 | 8 | 9 | 10 | 11 | 12 | 13 | 14 | 15 | 16 |
|---|---|---|---|---|---|---|---|---|---|---|---|---|---|---|---|---|
| Jumper Number | J1<br>J2 | J3<br>J4 | J5<br>J6 | J7<br>J8 | J9<br>J10 | J11<br>J12 | J13<br>J14 | J15<br>J16 | J17<br>J18 | J19<br>J20 | J21<br>J22 | J23<br>J24 | J25<br>J26 | J27<br>J28 | J29<br>J30 | J31<br>J32 |

Refer to ***Configuring Inputs*** in Section 3, for more information on jumper settings for the IMASI23.

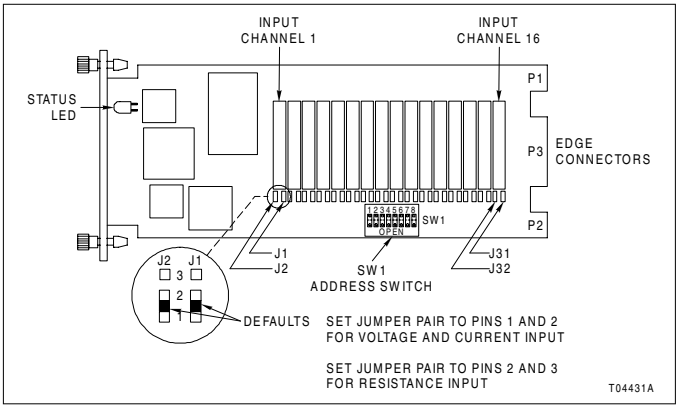


**Figure C-1. IMASI03 Three Pin Jumper Locations**

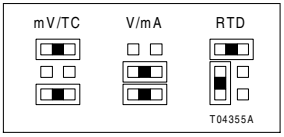


**Figure C-2. IMASI23 Six Pin Jumper Block Configuration**

# Function Code 216 Modifications

The following change is required to function code 216 when replacing an IMASI03 module with an IMASI23 module.

- Change specification S11 to 24 bit A/D conversion resolution.

Refer to Table 1-4 for typical analog to digital conversion rates. The rate specified is the conversion time for all channels.

> **NOTE:** If 16, 18, 20, or 22 bits resolution is already selected in function code 216, the IMASI23 module will automatically default to the 24 bit resolution. This change is only necessary to insure the specifications accurately reflect the module capabilities.

# Power Consumption Comparison

IMASI03 module:

- 300 mA at +5 VDC
- 130 mA at +15 VDC
- 35 mA at -15 VDC

IMASI23 module:

- 500 mA at +5 VDC

In most instances, this small difference in power consumption will not require any changes to the power supplies. To insure this, be certain to check all of your calculations for power supply sizing and system current requirements and adjust as necessary for the IMASI23 power consumption specification.



# Index


**A**

Address switch (S1) ..... 3-3
Alarm and exception reporting ..... 2-11, 6-1
Analog inputs ..... 1-2
Automatic adjustments and corrections
  Automatic calibration ..... 2-9
  Cold junction compensation ..... 2-7
  Engineering units conversion ..... 2-8
  Input calibration ..... 2-7
  Input processing ..... 2-6
  Point value calculation ..... 2-7
  User gain and offset ..... 2-8

**B**

Binary address ..... 3-3

**C**

Cable connections ..... 3-7
  NTAI06 to IMASI13 ..... A-1
Calculating point values ..... 2-7
Calibrating inputs ..... 2-7, 4-3
Calibration
  Automatic ..... 1-3, 2-9
  Field ..... 2-9, 4-4
Channel
  Calibration, individual ..... 4-6
  Data ..... 6-2
  Isolation ..... 1-3
  Resolution ..... 1-3
Checking connections ..... 7-4
Cleaning
  Edge connectors ..... 7-3
  Printed circuit boards ..... 7-3
Cold junction
  Compensation ..... 2-7
  Reference ..... 2-2
Communication levels ..... 2-2
Configuration
  Function codes ..... 4-1
  Online ..... 2-11
Configuring inputs ..... 3-4, 4-1
Connectors P1, P2, P3 ..... 3-6
Continue - Do Not Display Error ..... 6-6
Controller errors ..... 6-2
Conventions, document ..... 1-5
Corrective actions for error messages ..... 6-2

**D**

Data on input channels ..... 6-2
Data values ..... 2-5
Diagnostics
  Diagnostic mode ..... 2-9
  Normal operation ..... 2-10
  On reset ..... 2-10

**E**

Enclosures ..... 2-11
Engineering units conversion ..... 1-3, 2-8
Error codes and S1 settings ..... 6-6
Error messages and actions ..... 6-2
Error on controller ..... 6-2
Exception and alarm reporting ..... 6-1

**F**

Factory calibration reset ..... 4-4
Features ..... 1-1
Field calibration ..... 2-9, 4-4
  Calibration ..... 4-5
  Calibration ranges ..... 4-5
  Calibration steps ..... 4-5
  Function code 217 ..... 4-4
  Individual channel calibration ..... 4-6
  Test equipment required ..... 4-6
Field static kit ..... 3-1
FTP ..... 2-11
Function code ..... 2-6
  Configuration ..... 4-1
  FC 215 ..... 2-3, 2-8, 4-1
  FC 216 ..... 1-3, 2-7, 2-8, 4-1
  FC 217 ..... 2-7, 2-8, 2-9, 4-4

# Index (continued)


Functional operation
I/O expander bus....2-4
I/O expander bus interface....2-5
Input multiplexer (MUX) ....2-3
LED indicators....2-4
Microcontroller and memory....2-3
Switch settings ....2-3
Termination units....2-5

**G**

Gain and offset adjustment....2-8
Glossary of terms and abbreviations....1-5

**H**

Halt - Display Error....6-5

**I**

I/O expander bus ....2-4
Bus interface ....2-5
Communication security....2-10
IMASI13
Functional operation....2-1
Installation ....3-2
Logic power....2-11
Operating procedures .... 5-1, 6-1
Operation ....5-1
Overview ....1-1
Setup....3-2
Startup....5-1
Status LEDs ....5-1
Troubleshooting ....6-1
Input
Calibration .... 2-7, 4-3
Channel data....6-2
Configuration....4-1
Processing ....2-6
Input multiplexer (MUX) ....2-3
Instruction
Content....1-3
Glossary of terms and abbreviations.... 1-5
How to use .... 1-4
Intended user .... 1-1

**J**

Jumper
Channel .... 3-4
Configuration .... 3-4
Location.... 3-4

**L**

Logic power.... 2-11

**M**

Maintenance.... 7-1
Schedule .... 7-1
Tools required .... 7-2
Memory .... 2-3
Microcontroller.... 2-3
Module
Description .... 2-1
Installation .... 3-2
Jumpers.... 3-4
Repair and replacement .... 8-1
Setup .... 3-2
Wiring .... 3-6
Module functional tests
Continue - Do Not Display Error.... 6-6
Halt-Display Error .... 6-5
Module functional test .... 6-5
Test equipment required .... 6-5
Module mounting unit.... 2-11

**N**

Nomenclatures .... 1-6
NTAI06 termination unit
Cold junction reference input.... A-1
Configuring inputs .... A-1

# Index (continued)


**O**

Offset and gain adjustment....2-8
Onboard indicators....2-4, 5-1, 6-1
Online configuration....2-11
Open input detection....1-3, 2-10
Operating modes....6-6
Operating procedures....5-1, 6-1
Operation....5-1

**P**

P1, P2, P3 connectors....3-6
PCB cleaning....7-3
Point value calculation....2-7
Power, logic....2-11
Preventive maintenance
  Checking connections....7-4
  Schedule....7-1
  Tools and equipment....7-2
Processing I/O inputs....2-6

**R**

Reference documents....1-5
Repair and replacement....8-1
Restoring factory calibration....4-4
RTD types....1-2

**S**

S1 address switch
  Settings....3-3
  Settings and error codes....6-6
Security and integrity checks
  Alarm and exception reporting....2-11
  Diagnostics during normal operation....2-10
  Diagnostics in diagnostic mode....2-9
  Diagnostics on reset....2-10
  I/O expander bus....2-10
  Open input detection....2-10
Select address....3-3
Setup and installation
  Address switch (S1)....3-3
  Binary address....3-3
  Configuring inputs....3-4
  Jumper configuration....3-4
  Jumper location....3-4
  Jumpers used for each channel....3-4
  Physical installation....3-5
  Termination unit configuration....3-5
Special handling....3-1
Specifications....1-6
Startup....5-1
Switch settings....2-3

**T**

Termination....2-5
  Cable connections....3-7
  Unit....3-5
Test equipment required....6-5
Thermocouples....1-2, 1-3, 2-7
Troubleshooting....6-1
  Onboard indicators....2-4
  S1 settings and error codes....6-6

**U**

Unpacking and inspection....3-2
User gain and offset....2-8

**W**

Wiring connections and cabling....3-7
  Cable connections....3-7
  Description....3-6
  P1, P2, P3....3-6

*For the latest information on ABB and Year 2000 Product Compatibility*
*Visit us on the World Wide Web at http://www.abb.com*

Our worldwide staff of professionals is ready to meet *your* needs for process automation.
For the location nearest you, please contact the appropriate regional office.


**Americas**
29801 Euclid Avenue
Wickliffe, Ohio USA 44092
Telephone 1-440-585-8500
Telefax 1-440-585-8756

**Asia/Pacific**
539 Yishun Industrial Park A
Singapore 768740
Telephone 65-756-7655
Telefax 65-756-7309

**Germany**
Industriestrasse 28
D-65760 Eschborn
Germany
Telephone 49-6196-800-0
Telefax 49-6196-800-1119

**Europe, Africa, Middle East**
Via Puccini 2
16154 Genoa, Italy
Telephone 39-010-6584-943
Telefax 39-010-6584-941



Form WBPEEUI240774A0 Litho in U.S.A. Sept2000


Copyright © 2000 by ABB Automation Inc., as an Unpublished Work, All Rights Reserved
® Registered Trademark of ABB Automation Inc.
™ Trademark of ABB Automation Inc.