Atten： Smiling
Mobile/WhatsApp:+86 18050035902
E-mail: info@htechplc.com

Advant Controller 31
Intelligent Decentralized Automation System

Operating Manual

September 2001

Basic Unit 07 KT 94

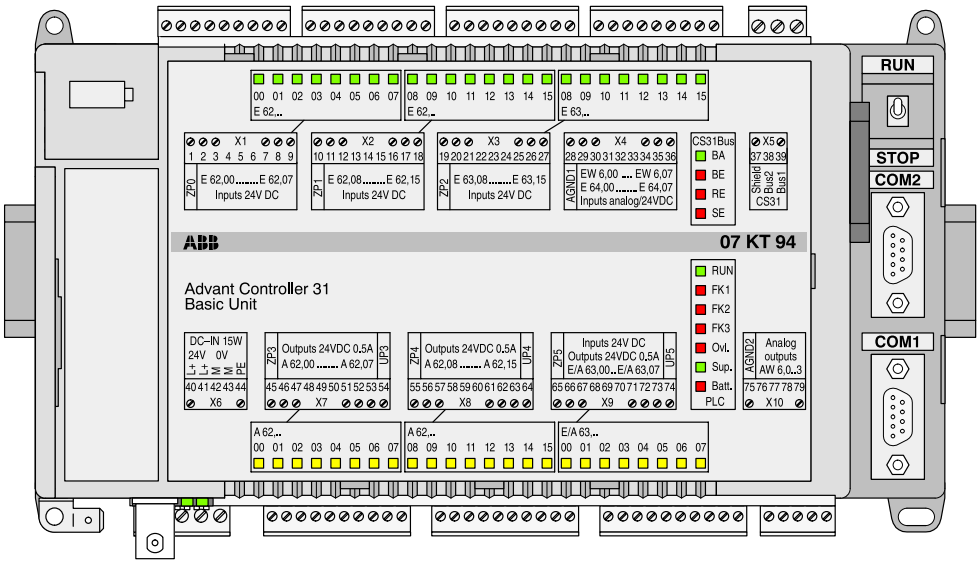

4 Basic Unit 07 KT 94

Basic unit with max. 240 kB user program + 120 kB user data, CS31 system bus

The basic unit **07 KT 94 R101** is the standard device for all applications. In addition, there are basic units with extended performance (e.g. 07 KT 94 R161 with ARCNET connection).

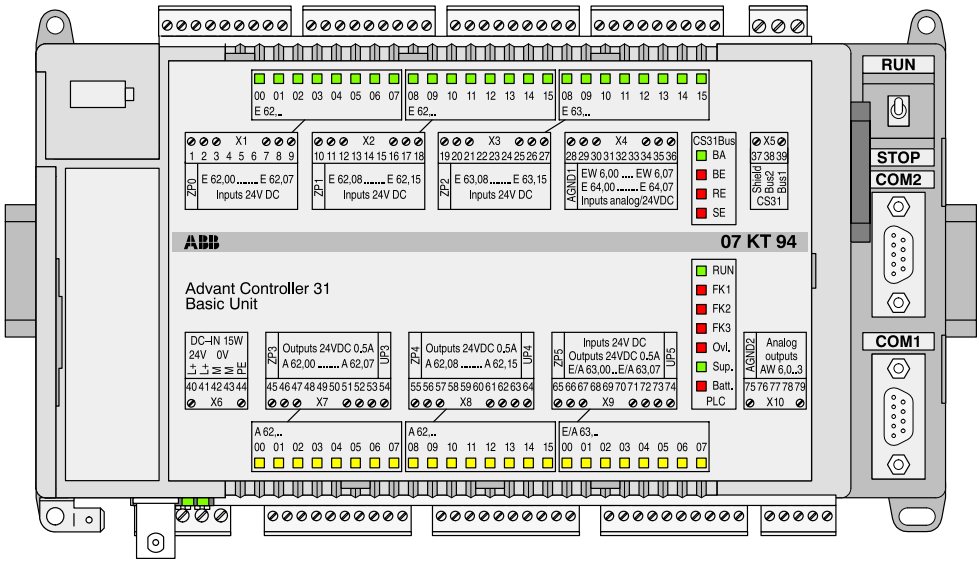

Fig. 4-1: Basic unit 07 KT 94 R161

Contents

4.1 Brief description 4-3
4.1.1 Main features 4-3
4.1.2 Project planning / Start-up 4-3

4.2 Front view 4-5

4.3 Structure of the front panel 4-6
4.3.1 Terminal assignment overview 4-7

4.4 Electrical connection 4-8
4.4.1 Application example for input and output wiring 4-8
4.4.2 Connecting the supply voltage 4-9
4.4.3 Connection of the CS31 system bus 4-9
4.4.4 Connection of the digital inputs 4-10
4.4.5 Connection of the digital outputs 4-11
4.4.6 Connection of the digital inputs/outputs ... 4-13
4.4.7 Connection of the 8 konfigurable analog inputs 4-14
4.4.8 Connection of the 4 konfigurable analog outputs 4-24
4.4.9 Battery and battery replacement 4-26
4.4.10 Serial interface COM1 4-26
4.4.11 Serial interface COM2 4-28
4.4.12 Networking interface 4-29

4.5 SmartMedia Card 4-30

4.6 High-speed counter 4-32

4.7 Technical data 07 KT 94 4-37
4.7.1 General data 4-37
4.7.2 Power supply 4-37
4.7.3 Lithium battery 4-38
4.7.4 Digital inputs 4-38
4.7.5 Digital outputs 4-38
4.7.6 Digital inputs/outputs 4-39
4.7.7 Analog inputs 4-39
4.7.8 Analog outputs 4-40
4.7.9 Connection of serial interface COM1 4-41
4.7.10 Connection of serial interface COM2 4-41
4.7.11 Connection to the CS31 system bus 4-41
4.7.12 LED displays 4-42
4.7.13 High-speed hardware counter 4-42
4.7.14 Mechanical data 4-43
4.7.15 Mounting hints 4-44
4.7.16 Ordering data 4-44

4.10 MODBUS communication via COM2 4-45

4.11 Description ARCNET 4-57

Features of the basic units

Basic unit	07 KT 94 **R101**	07 KT 94 **R161**		
User program User data	240 kB 120 kB	240 kB 120 kB		
Digital inputs Digital outputs Digital inputs/outputs Analog inputs Pt100 Analog outputs 20 mA	24 16 8 8 yes 4 yes	24 16 8 8 yes 4 yes		
Are the analog inputs configurable as digital inputs	yes	yes		
Serial interfaces	COM1 COM2	COM1 COM2		
Modbus via COM2	yes	yes		
Parallel interface for connecting a coupler	yes	yes		
ARCNET via BNC	no	yes		

4.1 Brief description

The basic unit 07 KT 94 works either as

- bus master in the decentralized automation system Advant Controller 31 or as
- slave (remote processor) in the decentralized automation system Advant Controller 31 or as
- stand-alone central unit.

The device has a 24 V DC power supply voltage.

4.1.1 Main features

- 24 digital inputs with LED displays
- 16 digital transistor outputs with LED displays
- 8 digital inputs/outputs with LED displays
- 8 **individually configurable** analog inputs 0...10 V, 0...5 V, ±10 V, ±5 V, 0...20 mA, 4...20 mA, differential inputs, Pt100 (2-wire or 3-wire), the analog inputs are also individually configurable as digital inputs
- 4 **individually configurable** analog outputs ±10 V, 0...20 mA, 4...20 mA
- 2 counters for counting frequencies up to 50 kHz, configurable in 7 different operating modes
- 1 CS31 system bus interface for system expansion
- 1 interface for connecting communication modules (e.g. 07 KP 90)
- Serial interface COM1
  – is set as programming interface
  – can be set as an ASCII interface for connecting peripheral devices (e.g. MMC devices)
- Serial interface COM2
  – as an ASCII interface for connecting peripheral devices (e.g. MMC devices)
  – MODBUS master and slave interface
- Real-time clock
- LEDs for displaying operating conditions and error messages
- Detachable screw-type terminal blocks
- Fastening by screws or by snapping the device onto a DIN rail
- The lithium battery 07 LE 90 can be put into the battery compartment in order to
  – store and back-up the user program in the RAM
  – store and back-up data which is additionally contained in the RAM, e.g. the status of flags
  – back-up the time and date (real-time clock)
- RUN/STOP switch for starting and aborting the program execution.
- Extensive diagnosis functions
  – Self-diagnosis of the basic unit
  – Diagnosis of the CS31 system bus and the connected modules
- Integrated Flash EPROM for storing program and data
- Exchangable Smart Media Card 07 MC 90 for user data or for updating the operating system or PLC program.

4.1.2 Project planning / start-up

The following has to be observed for project planning and start-up:

- Programming
  is performed using AC31 programming software, which can be run on commercially available IBM compatible PCs (see documentation for the programming system 907 PC 331)
- The processor processes the user program contained in the RAM. It is loaded into the RAM via the serial interface COM1/COM2 or via the SmartMedia Card and can also be changed there. An additional save command is used to save the program in the Flash EPROM.

  Note: In the course of the following operations

  – Power 'ON'
  – RUN/STOP switch from STOP --> RUN
  – Program start-up with programming system
  – Cold start of the PLC
  – Warm start of the PLC

  the RAM is overwritten by the contents of the Flash EPROM, if a user program is contained in the Flash EPROM.
- Online program modification
  A quick modification of the user program is possible without interrupting the operation (see programming system 907 PC 331).
- Change-over between the operating modes
  – Stand-alone basic unit
  – Bus master basic unit and
  – Slave basic unit

The basic unit is set to "Stand-alone" upon delivery. Changing the application mode is carried out in the following three steps:

1. Change the system constant KW 0,0 in the PLC, see chapter A7.3 (Appendix), System constants
2. Save the user program in the Flash EPROM or use a battery for back-up

3. Activate new operating mode by:

  – calling up the menu item of ”Enable PLC mode” in the ABB programming and test system or
  – performing a warm start
  – performing a cold start or
  – power OFF/ON.

- Setting the cycle time
  see chapter B1 (Appendix), Processing times
- Addressing when remote modules are connected
  see chapter B2 (Appendix), Addressing
- Back-up of data areas
  Back-up of data areas, i.e. saving of data during power OFF/ON, is only feasible with built-in battery. The following data can be backed, completely or partly:

  – Binary flags
  – Word flags
  – Double word flags
  – Step chains
  – Historical values

In order to back-up certain data, they have to be excluded from initialization to 0.

- Initialization of data areas
  During program start, that data areas are initialized to 0 partly or completely, that are defined by system constants, see chapter B7 (Appendix), System constants.

  If no battery is effective or if the system constants are in their default values (factory settings), all of the above mentioned data areas are completely set to 0 after power OFF/ON.
- Reactions on errors of error class 3
  The user can configure whether or not the user program is to be aborted automatically, if an class 3 error occurs, see chapter B7 (Appendix), System constants.
- Starting-up the AC31 system after power ON
  The user can enter a number of n remote modules in KW 00,09. The user program starts only, i.e. it handles process inputs and outputs only, if at least n remote modules have been adopted into the CS31 system bus cycle, see chapter B7 (Appendix), System constants.

4.2 Front view

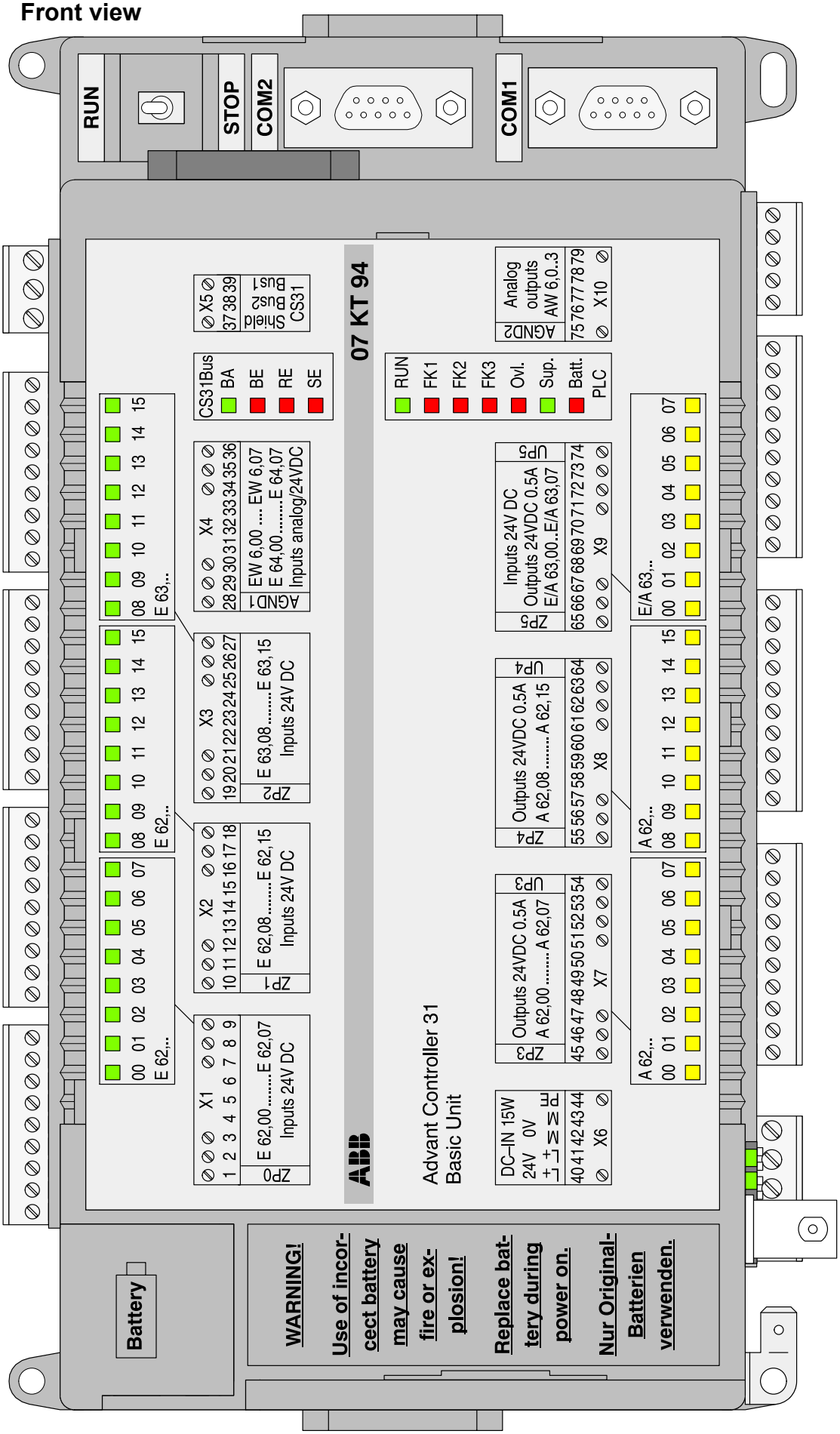

Fig. 4-2: Front view 07 KT 94 R161

4.3 Structure of the front panel

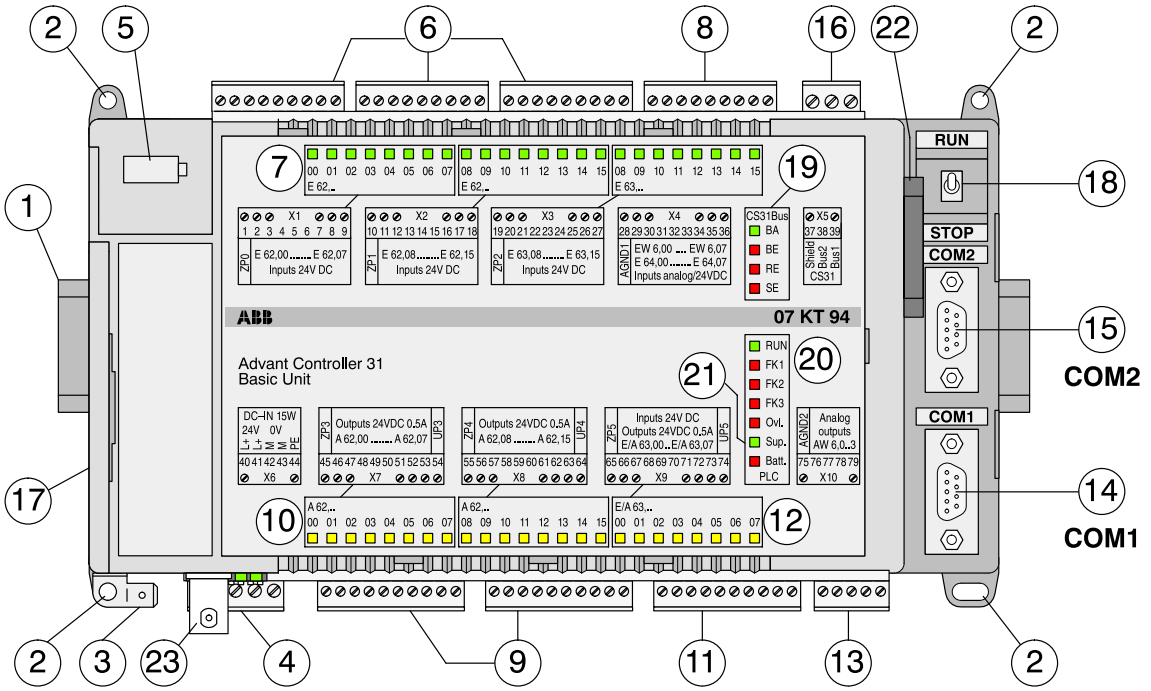

Fig. 4-3: Basic unit 07 KT 94 R161 with reference points

(1) Fastening the device on DIN rail

(2) Fastening the device by screws

(3) Faston earthing terminal 6.3 mm

(4) Supply voltage connection 24 V DC

(5) Battery compartment

(6) 24 digital inputs in 3 groups

(7) 24 green LEDs for the digital inputs

(8) 8 individually configurable analog inputs in one group 0...10 V, 0...5 V, ±10 V, ±5 V, 0...20 mA, 4...20 mA, Pt100 (2-wire or 3-wire), differential inputs, the analog inputs are also individually configurable as digital inputs

(9) 16 digital transistor outputs in two groups

(10) 16 yellow LEDs for the digital outputs

(11) 8 digital inputs/outputs in one group

(12) 8 yellow LEDs for the digital inputs/outputs

(13) 4 individually configurable analog outputs ±10 V, 0...20 mA, 4...20 mA in one group

(14) Serial interface COM1 (programming, MMC)

(15) Serial interface COM2 (MMC)

(16) Connection for CS31 system bus

(17) Cover of the interface for the connection of communication modules (may only be removed for connecting communication modules)

(18) Switch for RUN/STOP operation:
With the RUN/STOP switch the execution of the user program is started or stopped.

(19) LED displays for CS31 system bus

BA	LED green	Bus active
BE	LED red	Bus error
RE	LED red	Remote unit error
SE	LED red	Serial unit error

(20) LED displays for RUN and error class

RUN	LED green	User progr. is running
FK1	LED red	Fatal error
FK2	LED red	Serious error
FK3	LED red	Light error

(21) Other LED displays

Over-load	LED red	Overload/short-circuit at an output
Supply	LED green	Supply voltage available
Battery	LED red	Batt. **not** effective

(22) Insertable SmartMedia Card for operating system, user program and user data

(23) ARCNET BNC connector **only for R161**
Not available for R101

4.3.1 Terminal assignment overview

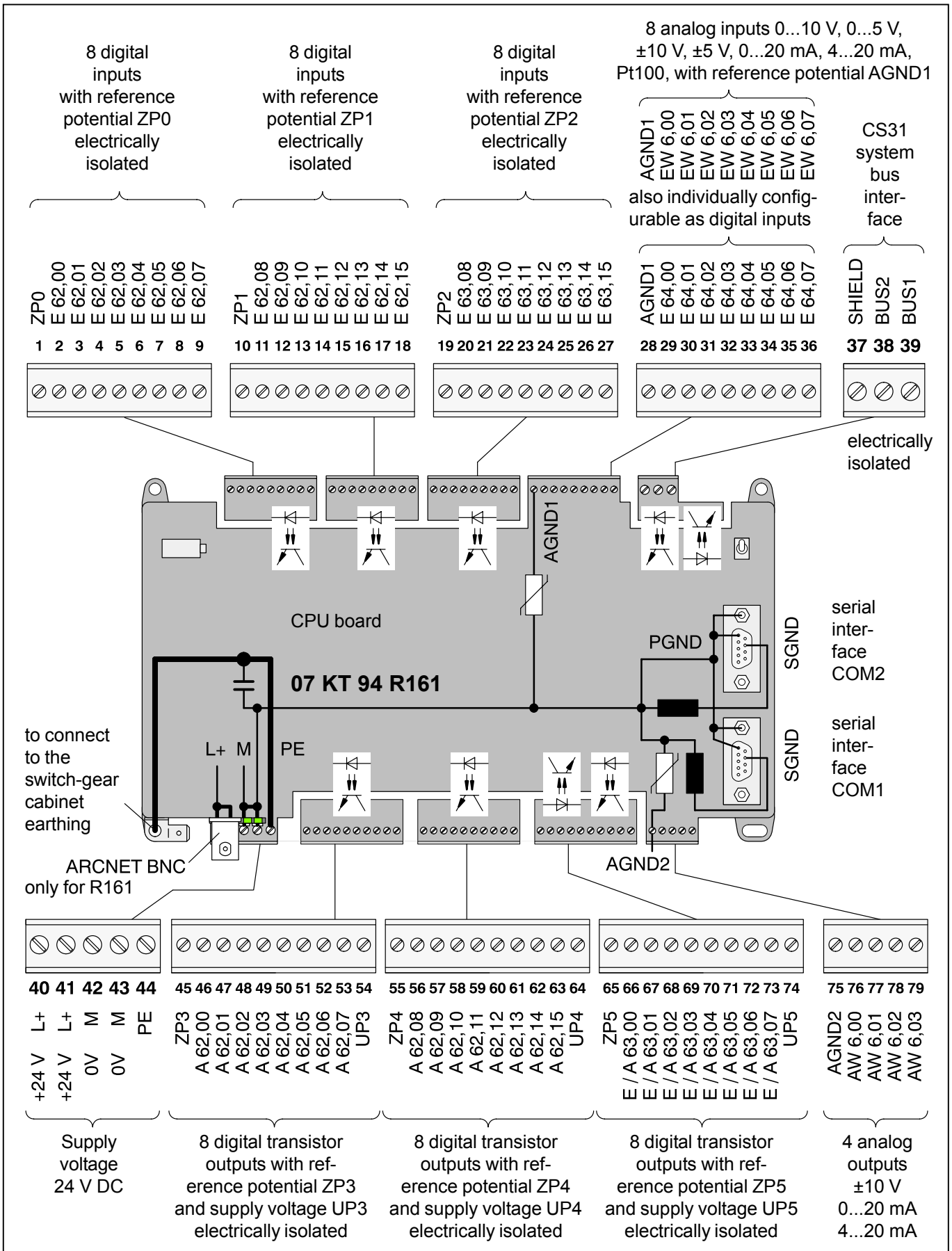

Fig. 4-4: Basic unit 07 KT 94 R161, terminal assignment, overview of electrical isolations and connections inside the unit

4.4 Electrical connection

4.4.1 Application example for input and output wiring

The following illustration shows an application example in which different possibilities for wiring inputs and outputs are used.

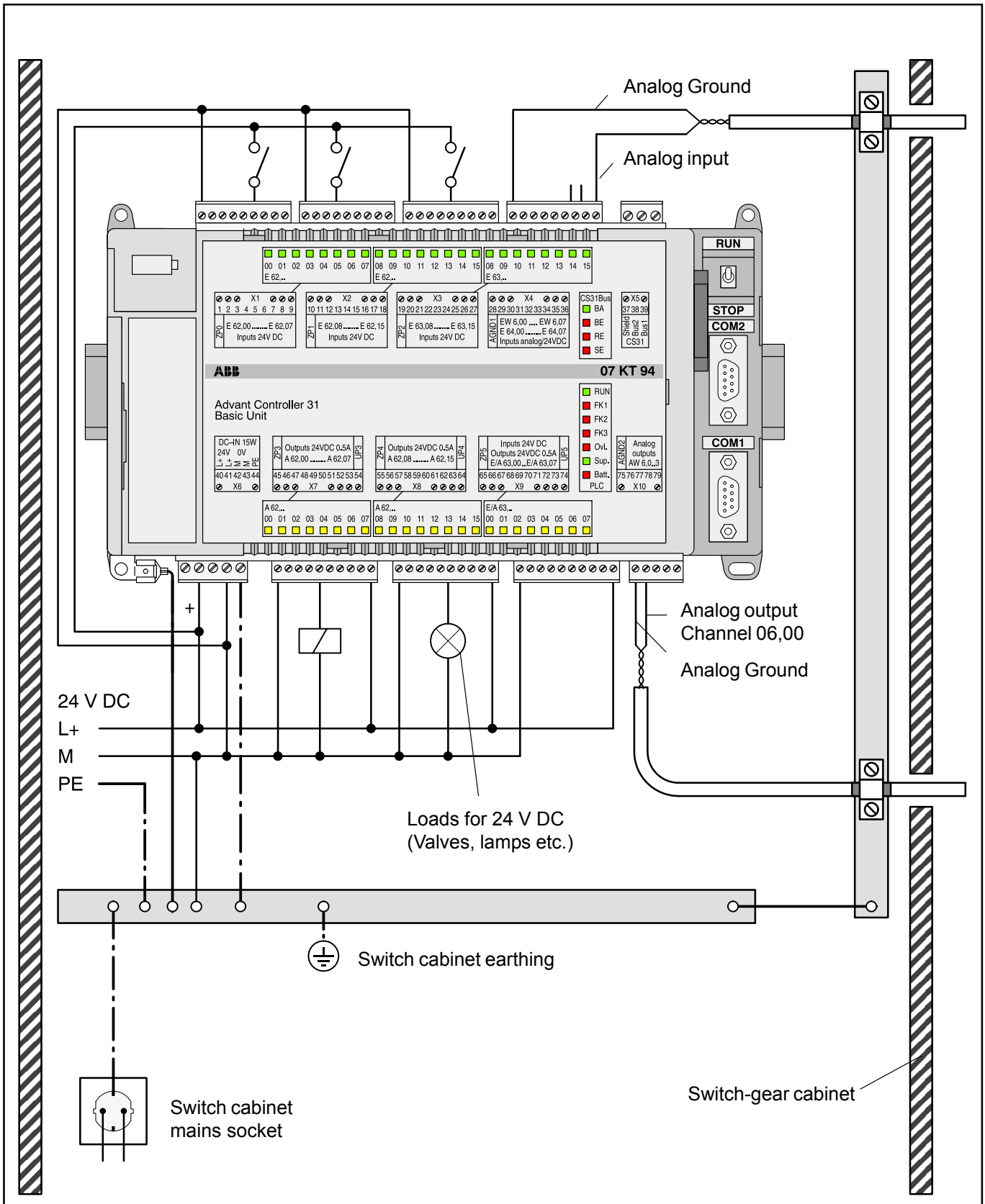

Fig. 4-5: Application example: Basic unit 07 KT 94 in the switch-gear cabinet

Please observe in particular:

- The earthing measures
- The handling of the electrically isolated input groups
- The handling of the electrically isolated output groups
- The connection of shielded analog cables
- The earthing of the switch-gear cabinet mains socket

4.4.2 Connection of the supply voltage

The 24 V DC supply voltage is connected via a 5-pole detachable screw-type terminal block.

Attention: Plug and unplug terminal block only with power is off!

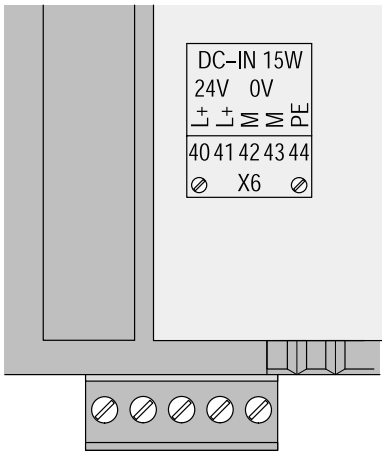

40 41 42 43 44

Terminal assignment:

40	L+	Supply voltage +24 V DC
41	L+	Supply voltage +24 V DC
42	M	Reference potential (0V)
43	M	Reference potential (0V)
44	PE	Protective Earth terminal, connected with the Faston terminal inside the device. Do not cause earth loops! Connect PE and Faston to the same earthing potential!

Fig. 4-6: Assignment of the terminal block for the 24 V DC-IN supply voltage

The terminals 40 and 41 (L+) as well as 42 and 43 (M) are connected to each other via the printed circuit board. If the power supply is looped through, these two connections must not be burdened with currents higher than **4 A.**

Please take also into consideration that supply voltages which are looped through are disconnected for the following devices when the plug is withdrawn.

If higher currents are to be conducted without interruption possibility, the two wires for M have to be connected under the same terminal. The same applies for L+.

4.4.3 Connection for the CS31 system bus

37 38 39

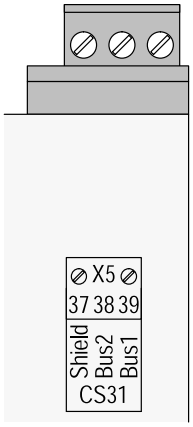

Terminal assignment:

37	SHIELD
38	BUS2
39	BUS1

Fig. 4-7: Assignment of the CS31 system bus interface

The connection to the CS31 system bus is made by means of a 3-pole detachable terminal block. Please observe:

- All of the AC31 devices, no matter whether they are master or slave devices, are connected with twisted-pair bus line as follows:
  - One core of the bus line is looped through via the BUS1 terminals of all devices to be connected to the CS31 system bus.
  - The other core of the bus line is looped through via the BUS2 terminals of all devices to be connected to the CS31 system bus.
- If the basic unit 07 KT 94 is located at the beginning or at the end of the bus line, the bus terminating resistor (120 Ω) has to be connected additionally between the BUS1 and BUS2 terminals.
- The shield of the twisted-pair bus line is looped through via the SHIELD terminals of all the devices to be connected to the CS31 system bus.
- The handling of the CS31 system bus is described in detail in volume 2, System data.

4.4.4 Connection of the digital inputs

The following figure shows the assignment of the 24 digital inputs.

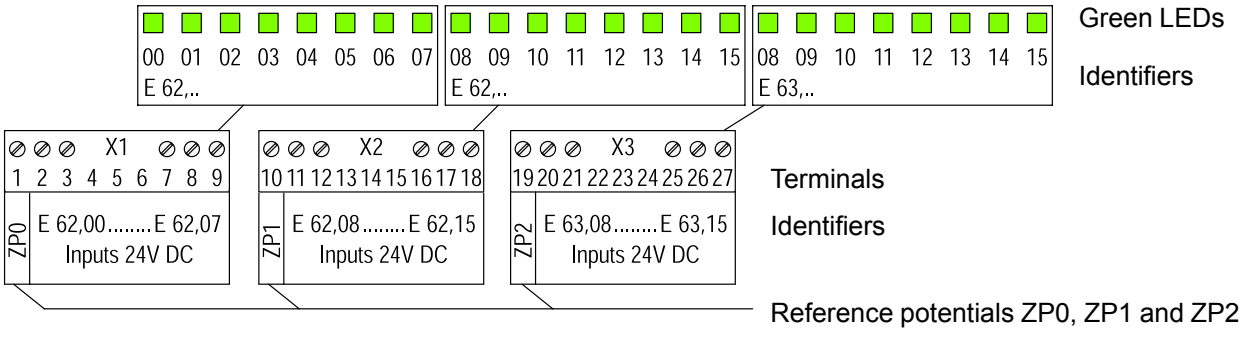

Fig. 4-8: Assignment of the 24 digital inputs

Features:

- The 24 digital inputs are arranged in three groups of 8 inputs each.
- The three groups E 62,00...E 62,07, E 62,08...E 62,15 and E 63,08...E 63,15 are electrically isolated from each other.
- The inputs use 24V signals in positive logic (1 = +24 V).
- The signal delay of the inputs is configurable to 7 ms (default) or 1 ms. The configuration is performed by setting certain bits in the system constants KW 85,00 and KW 85,01 as follows:

KW 85,00 Bit 00 to 15

Bit No.	**configures**	
00	Dig. input	E 62,00
01	Dig. input	E 62,01
:		:
14	Dig. input	E 62,14
15	Dig. input	E 62,15

KW 85,01 Bit 00 to 15

Bit No.	**konfigures**	
00	Dig. input	E 63,00
01	Dig. input	E 63,01
:		:
14	Dig. input	E 63,14
15	Dig. input	E 63,15

Bit = 0: Input signal delay = 7 ms (default setting)
Bit = 1: Input signal delay = 1 ms

Remark:
E63,00...E 63,07 are the identifier for the 8 inputs of the 8 digital I/Os (see also 4.4.7).

Example: KW 85,00 = +255

→ E 62,00...E 62,07 = 1 ms
E 62,08...E 62,15 = 7 ms

Note: The (modified) system constants only become effective with the next warm or cold start.

Fig. 4-9: Configuration of the input signal delays at the 24 digital inputs

– The circuit configuration of the first group of the digital inputs is shown as an example in the following.

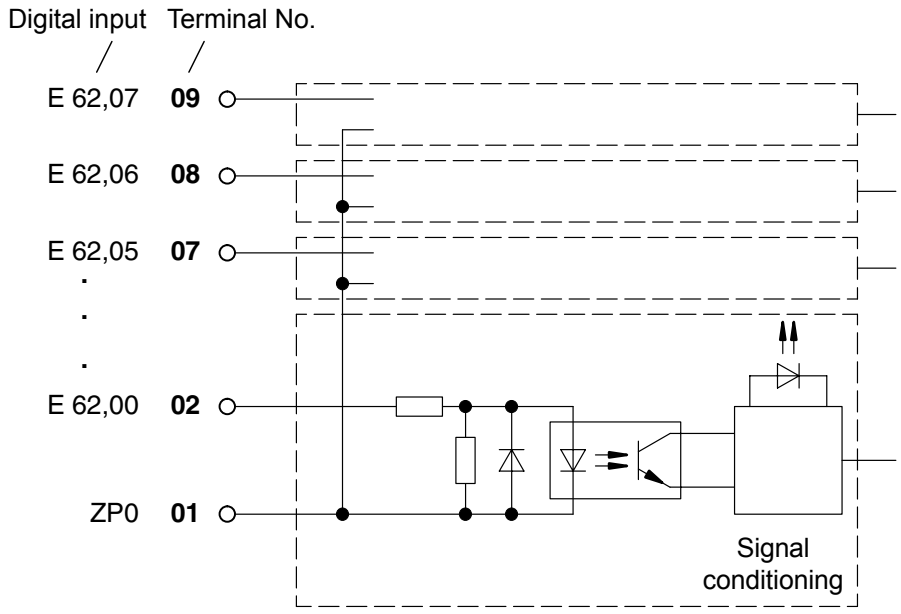

Fig. 4-11: Circuit configuration of the first group of the digital inputs as an example

Use of the input signals at the terminals 2 and 3 (E 62,00 and E 62,01) for the high-speed counter

The two inputs **E 62,00 and E 62,01** can be assigned to the internal high-speed counter by configuration. If the counter is used and therefore configured to one of its possible operating modes, these two inputs are only available for the counter. If the two inputs are to use as normal digital inputs, it has to be made sure, that the high-speed counter is configured to the operating mode "No counter". This operating mode is the default setting (see also the chapter "High-speed counter").

4.4.5 Connection of the digital outputs

The following figure shows the assignment of the 16 digital outputs.

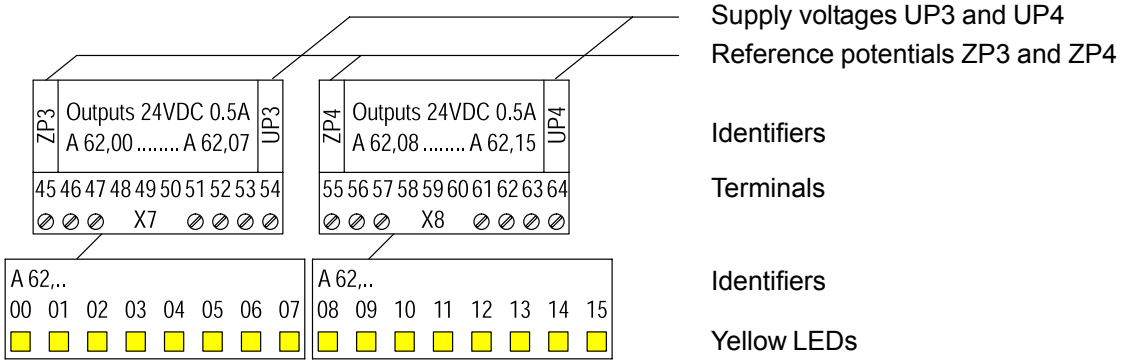

Fig. 4-12: Assignment of the 16 digital outputs

Features of the digital outputs:

– The 16 digital outputs are arranged in two groups of 8 outputs each.

– The two groups are electrically isolated from each other.

– The outputs can be loaded with a rated current of 500 mA.

– Each group as a whole is electrically isolated from the rest of the device.

– The outputs employ semiconductors and are short-circuit and overload-proof.

– The outputs are automatically switched off in case of overload or short-circuit.

– An overall error message indicates whether a short-circuit or an overload has occurred on a output group.

– The overload is displayed by the red LED Ovl. and via error flags in the PLC.

– The red LED Ovl. goes out when the overloaded output is switched on again automatically.

– The acknowledgement of the error message, i.e. the resetting of the error flags, is carried out according to chapter B4.8 (Appendix), Acknowledgement of error messages in the basic unit.

– The outputs are safe against reverse polarity and forced supply of 24 V DC.

Use of the digital output signal at the terminal 46 (A 62,00) for the high-speed counter

The output **A 62,00** can be assigned to the internal high-speed counter by configuration. If the counter is used in the operating modes 1 or 2 (up-counter), the output A 62,00 is only available for the counter.

If the output is to use as a normal digital output, it has to be made sure, that the high-speed counter is not configured to the operating modes 1 or 2 (see also the chapter "High-speed counter").

Circuit configuration of the digital outputs

The following figure shows the circuit configuration of the digital outputs of the first group as an example.

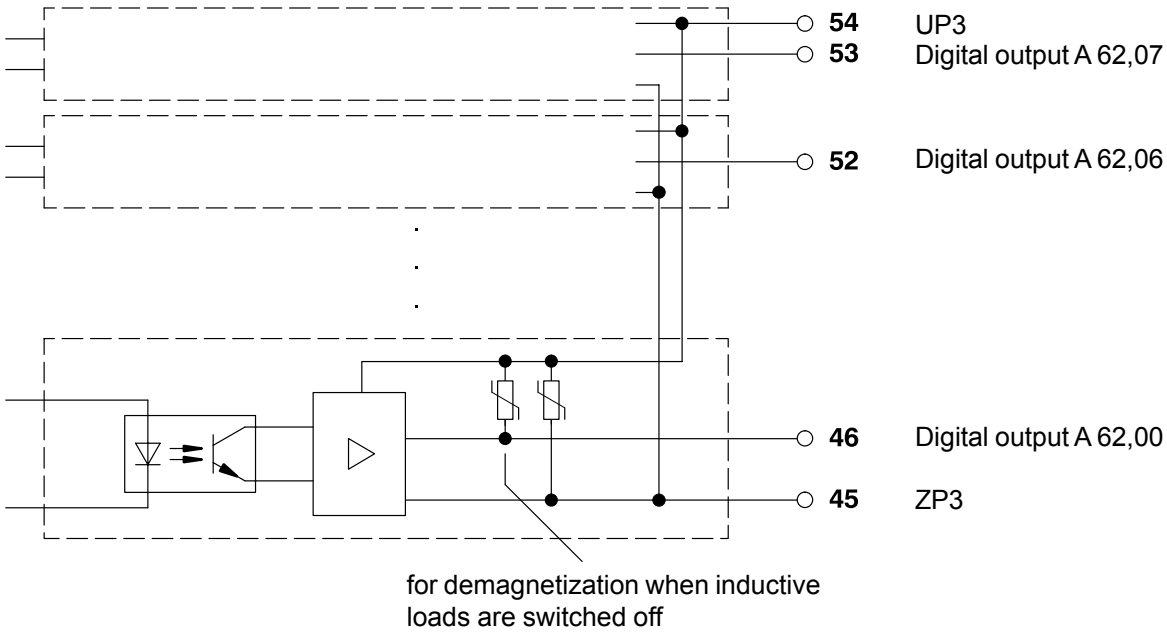

Fig. 4-13: Circuit configuration of the transistor outputs of the first group as an example

4.4.6 Connection of the digital inputs/outputs

The following figure shows the assignment of the 8 digital inputs/outputs.

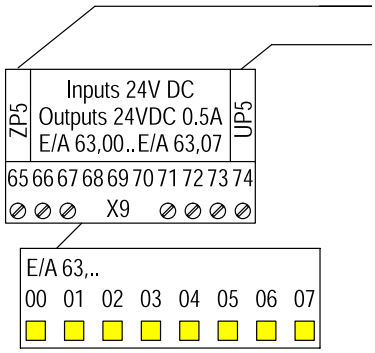

Reference potential ZP5

Supply voltage UP5

Identifiers E 63,00...E 63,07 for the inputs
Identifiers A 63,00...A 63,07 for the outputs

Terminals

Identifiers

Yellow LEDs

Fig. 4-14: Assignment of the 8 digital inputs/outputs

Features of the digital inputs/outputs:

- The 8 digital inputs/outputs are arranged in one group.
- The group as a whole is electrically isolated from the rest of the device.
- The inputs/outputs can be used individually as input, output or re-readable output.
- If the terminals are used as digital inputs, the input signal delay can be configured to 7 ms (default) or to 1 ms. The configuration is performed by setting certain bits in the system constant KW 85,01 as follows:
- If the terminals are used as digital outputs, the output signals "1" are individually monitored by the re-readable input. If the output status is wrong, an overall error message is generated for the involved output group. The error is displayed by the red LED Ovl. and by error flags of the PLC then.

  The error could have been caused by overload, short-circuit or missing supply voltage UP5/ZP5.

  The technical specifications are the same as with the other digital inputs and outputs.

KW 85,01 Bit 00 to 07

Bit No.	**configures**	
00	Dig. input	E 63,00
01	Dig. input	E 63,01
:		:
06	Dig. input	E 63,06
07	Dig. input	E 63,07

Bit = 0: Input signal delay = 7 ms (default setting)
Bit = 1: Input signal delay = 1 ms

Note: The (modified) system constants only become effective with the next warm or cold start.

Fig. 4-15: Configuration of the input signal delays at the inputs of the digital I/Os

Circuit configuration of the digital inputs/outputs

The following figure shows one of the 8 inputs/outputs of the group as an example.

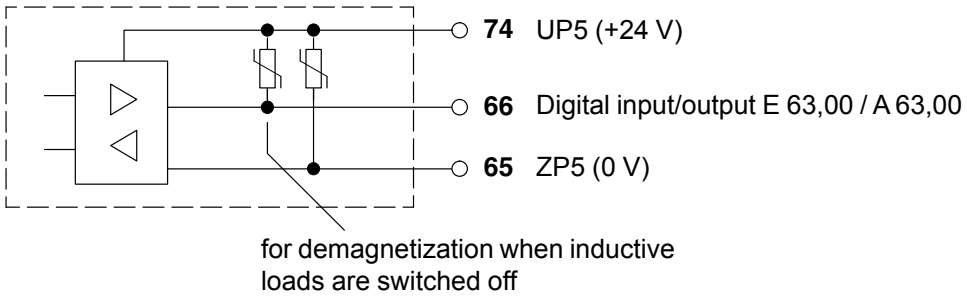

Fig. 4-16: Circuit configuration of a digital input/output of the group of 8

– The technical specifications of the inputs are the same with the other digital inputs, but **with the following exception:**

  Caused by the direct electrical connection with the output, the varistor for demagnetization of inductive loads (see figure above) is also in effect at the input.

  Therefore, the voltage difference between UP5 and the input signal must not be greater than the limit voltage of the varistor.

  The limit voltage of the varistor is ca. 36 V. This means, that if UP5 = 24 V, the input signal voltage must be between -12 V and +30 V. If UP5 = 30 V, the input voltage has to be within -6 V and +30 V.

  If all of the 8 channels of the group are used as inputs, and if in addition the UP5 terminal is left unconnected, no restrictions exist for the inputs. The input signal voltages then may be within -30 V and +30 V.

  There is no restriction for the input/output group concerning its safety against reversed polarity.

4.4.7 Connection of the 8 configurable analog inputs

The following figure shows the assignment of the 8 analog inputs.

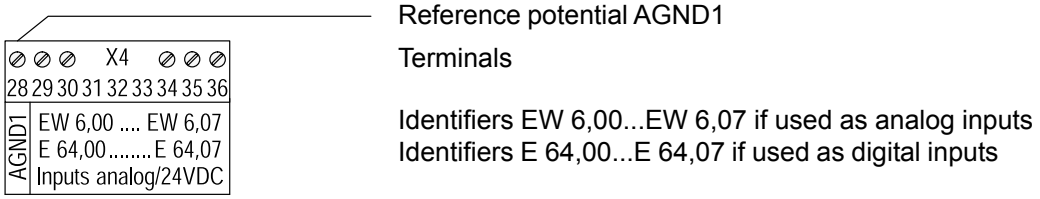

Fig. 4-17: Assignment of the 8 analog inputs

Features of the analog inputs:

– The 8 analog inputs are **not** electrically isolated.
– The resolution of the A/D converter is 12 bits.
– Analog signals are conducted in shielded cables (see Fig. 4-5).
– The analog inputs can be configured individually in a lot of different operating modes (even as digital inputs). The configuration is performed by setting certain bits in the system constants KW 86,00 to KW 86,07 as follows:

The system constant	Hex value in the Low Byte, bits **07 06 05 04 03 02 01 00** mean:
KW 86,00 configures analog input **EW 6,00** **KW 86,01 configures** analog input **EW 6,01** **KW 86,02 configures** analog input **EW 6,02** **KW 86,03 configures** analog input **EW 6,03** **KW 86,04 configures** analog input **EW 6,04** **KW 86,05 configures** analog input **EW 6,05** **KW 86,06 configures** analog input **EW 6,06** **KW 86,07 configures** analog input **EW 6,07** *) In the operating mode "Pt100 in 3-wire configuration" and in all configurations with differential inputs, two adjacent inputs belong together (e.g. EW 6,00 and EW 6,01). In this cases **both** inputs must be configured to the desired operating mode. The lower address must be the even address (EW 6,00), the next (higher) address (EW 6,01) the odd one. The converted analog value is available on the higher address (EW 6,01).	**00_H** = Analog input 0...10 V (default setting) **01_H** = unused **02_H** = Digital input with 7 ms input signal delay **03_H** = Analog input 0...20 mA **04_H** = Analog input 4...20 mA **05_H** = Analog input -10...+10 V **06_H** = Analog input 0...5 V **07_H** = Analog input -5...+5 V **08_H** = Analog input Pt100 in 2-wire configuration -50...+400°C **09_H** = Analog input Pt100 in 3-wire configuration -50...+400°C***** **$0A_H$** = Analog input 0...10 V differential inputs ***** **$0B_H$** = Analog input -10...+10 V differential inputs ***** **$0C_H$** = Analog input 0...5 V differential inputs ***** **$0D_H$** = Analog input -5...+5 V differential inputs ***** **$0E_H$** = Analog input Pt100 in 2-wire configuration -50...+70°C **$0F_H$** = Analog input Pt100 in 3-wire configuration -50...+70°C ***** Hex value in the High Byte, bits **15 14 13 12 11 10 09 08** mean: **00_H** = Plausibility and open-circuit monitoring and short-circuit monitoring (default setting) **01_H** = Open-circuit and short-circuit monitoring **02_H** = Plausibility monitoring **03_H** = No monitoring For details concerning monitoring see "The measuring ranges of the analog input channels"
Note: The (modified) system constants only become effective with the next warm or cold start.	

Fig. 4-18: Configuration of the 8 analog inputs

Configuration example:

The following is to be configurated:

a) 1 analog input ± 10 V, default monitoring and
b) 1 analog input Pt100, 3-wire conf., -50...+400 °C, Monitoring: only open-circuit and short-circuit

for a) Selected channel, e.g. **EW 6,00**

Configuration in KW 86,00
High Byte: 00_H = Default monitoring
Low Byte: 05_H = ± 10 V

KW 86,00: 0005_H = **+5 decimal**

for b) Selected channel, e.g. **EW 6,02** (even) and **EW 6,03** (next higher)

Configuration in KW 86,02
High Byte: 01_H = Monitoring: open-circuit and short-circuit
Low Byte: 09_H = Pt100, 3-wire conf., -50...+400 °C

KW 86,02: 0109_H = **+265 decimal**

Configuration in KW 86,03
High Byte: 01_H = Monitoring: open-circuit and short-circuit
Low Byte: 09_H = Pt100, 3-wire conf., -50...+400 °C

KW 86,03: 0109_H = **+265 decimal**

The measured value is available on **EW 6,03**.

The measuring ranges of the analog input channels

Resolution in the PLC system:
The measured values are converted with a resolution of 12 bits, i.e. 11 bits plus sign for voltage and 12 bits without sign for current. The ranges 0...5 V und ±5 V are converted with 10 bits plus sign.
Examples:

Measuring range	Range of numbers
–10 V...0...10 V	-32760_D....0....32760_D 8008_H...0000...$7FF8_H$
0...20 mA	0...32760_D 0000...$7FF8_H$

Further details can be found in volume 2, chapter 5.1 "General information for the use of analog inputs and outputs".

In order to make sure, that unused input channels have a defined 0V level, they may be shorted to AGND. Unused inputs must be configured with "unused".

The relationship between the analog input signals and the converted numbers is illustrated in the following figures.

	15	14	13	12	11	10	9	8	7	6	5	4	3	2	1	0
	-100 %	50 %	25 %	12.5 %	6.25 %	3.13 %	1.56 %	0.78 %	0.39 %	0.20 %	0.10 %	0.05 %	0.02 %	0	0	0
	Sign															
±10 V	-10V	5V	2.5V	1.25V	625mV	313mV	156mV	78mV	39mV	20mV	10mV	5mV	2mV	0	0	0
±5 V	-5V	2.5V	1.25V	625mV	313mV	156mV	78mV	39mV	20mV	10mV	5mV	2mV	1mV	0	0	0
0...10 V		5V	2.5V	1.25V	625mV	313mV	156mV	78mV	39mV	20mV	10mV	5mV	2mV	0	0	0
0...5 V		2.5V	1.25V	625mV	313mV	156mV	78mV	39mV	20mV	10mV	5mV	2mV	1mV	0	0	0
0...20 mA		10mA	5mA	2,5mA	1,25mA	625µA	313µA	156µA	78µA	39µA	20µA	10µA	5µA	0	0	0
4...20 mA		8mA	4mA	2mA	1mA	500µA	250µA	125µA	62,5µA	31,3µA	16µA	8µA	4µA	+4 mA offset		
Bit values	-32768	16384	8192	4096	2048	1024	512	256	128	64	32	16	8	4	2	1

Measuring ranges ±10 V, 0...10 V **11 bits resolution plus sign,**
Measuring ranges ±5V, 0...5 V **10 bits resolution plus sign,**
Measuring ranges 0...20 mA, 4...20 mA **12 bits resolution without sign,**

the value range of -100...+100 % corresponds to the numbers 8008_H...$7FF8_H$ (-32760...+32760),
range overflow: $7FFF_H$ (32767), **range underflow: 8001_H (-32767)**
open-circuit 4...20 mA: 8001_H (-32767)

Remark: Independent of the resolution, all numbers are represented with 12 bits plus sign.
Because of the results of internal calculations, all these bits can appear.

	15	14	13	12	11	10	9	8	7	6	5	4	3	2	1	0
	-100 %	50 %	25 %	12.5 %	6.25 %	3.13 %	1.56 %	0.78 %	0.39 %	0.20 %	0.10 %	0.05 %	0.02 %	0.01 %	0.005 %	0
	Sign															
Pt100	-1600°C	800°C	400°C	200°C	100°C	50°C	25°C	12.5°C	6.25°C	3.13°C	1.56°C	0.78°C	0.39°C	0.2°C	0.1°C	0
Bit values	-32768	16384	8192	4096	2048	1024	512	256	128	64	32	16	8	4	2	1

Measuring range -50...+70 °C **10 bits plus sign,**
Measuring range -50...+400 °C **11 bits plus sign,**
the value range of -50...+400 °C corresponds to the numbers $FC02_H$...$1FFE_H$ (-1022...+8190),
the value range of -50...+70 °C corresponds to the numbers $FC02_H$...0599_H (-1022...+1433),
range overflow / open-circuit: $7FFF_H$ (32767),
range underflow / short-circuit of the sensor: 8001_H (-32767)

Fig. 4-19: Relationship between the measured values and the positions of the bits in the 16-bit word

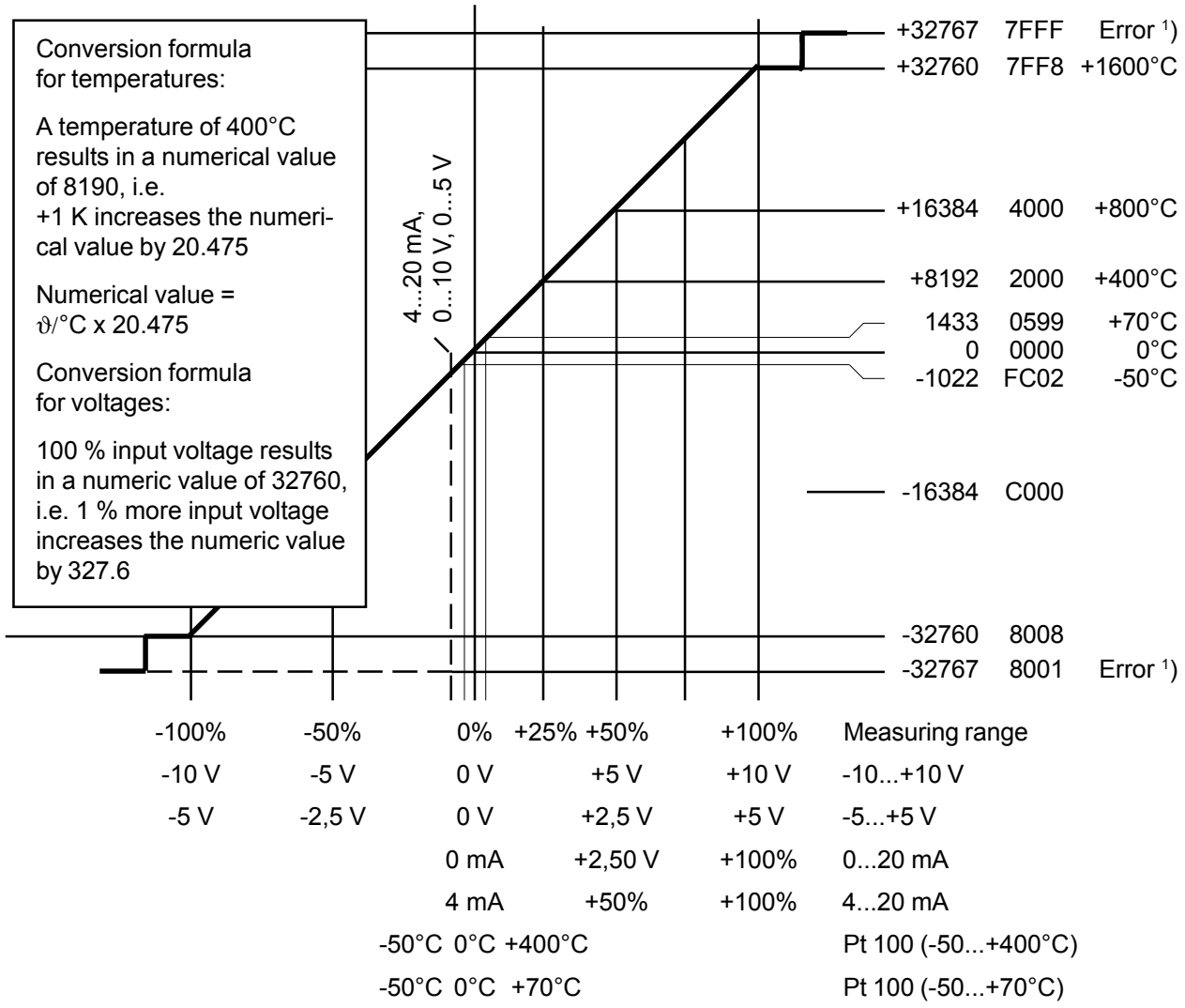

The following is valid for the platinum resistance thermometers:

Pt 100 = Platinum 100 Ω @ 0°C Measuring range -50...+400°C
Measuring range -50...+70°C

The dashed line is valid for the measuring ranges 4...20 mA, 0...10 V and 0...5 V. If in these ranges the measuring value is 2...3 % lower than the lower limit, this is evaluated as a range underflow.

Fig. 4-20: Relationship between measuring value and converted numerical value, voltage input, current input, temperature input

1) In case of a configured plausibility monitoring, range underflow and range overflow by 2...3 % result in an error message (FK4, error number 10).
Independent of the configured monitoring, the error values +32767 and -32767 are always generated in case of range underflow and range overflow. Exception: In the measuring range of 0...20 mA only the **range overflow** is detected.

Measuring ranges ±10 V / ±5 V / 0...10 V / 0...5 V

Input voltages that exceed the measuring range cause the overflow numerical value of +32767. If the measured value is below the range, the underflow numerical value of -32767 is set.

The input impedance is > 100 kΩ.

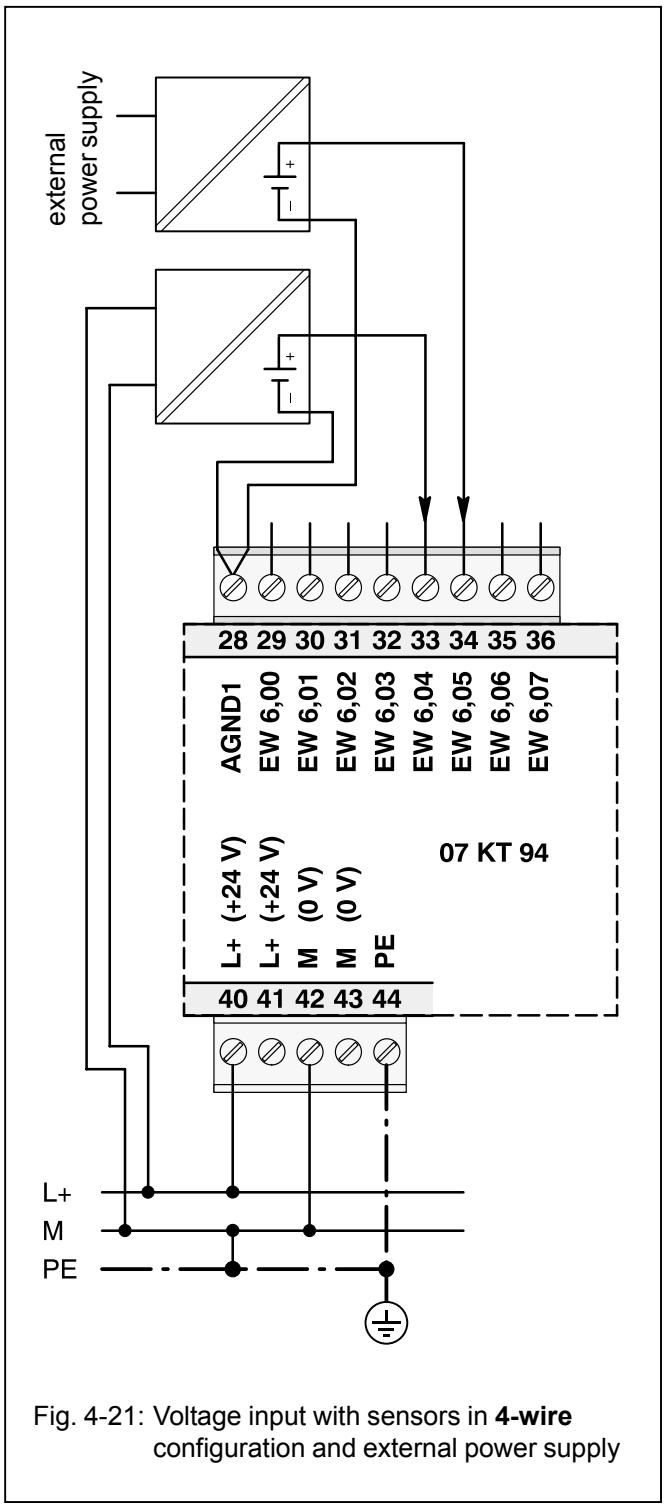

Fig. 4-21: Voltage input with sensors in **4-wire** configuration and external power supply

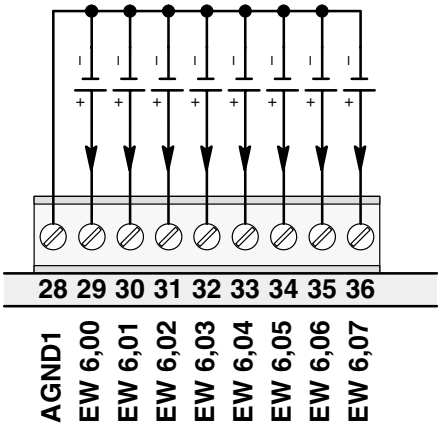

Fig. 4-22: Connection of voltage sensors

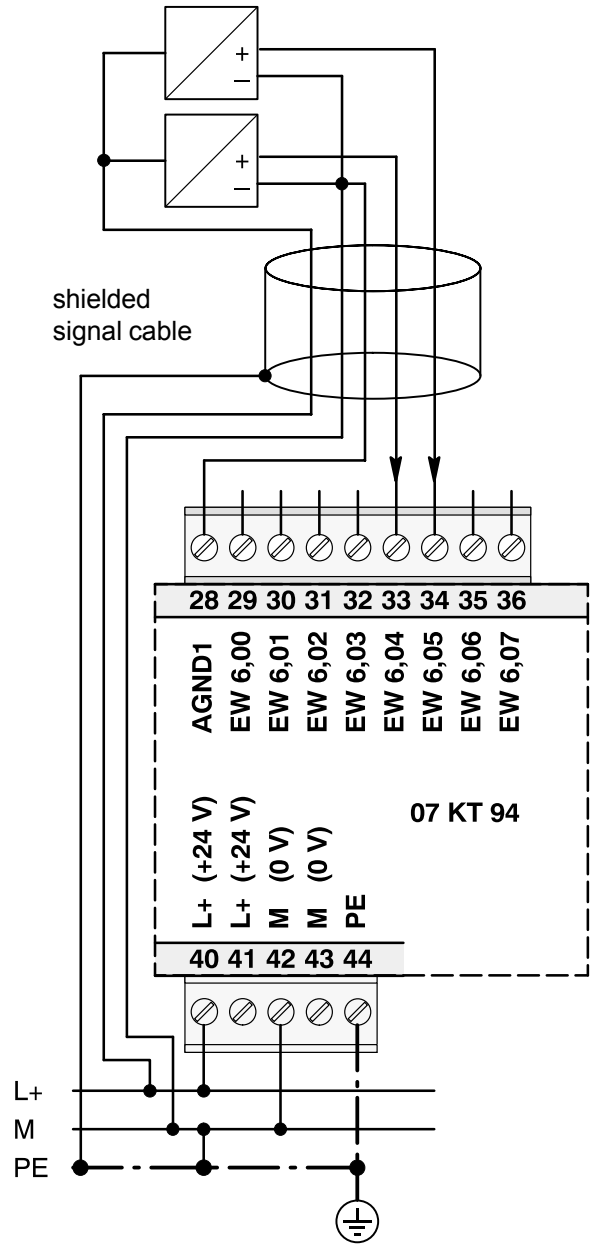

Fig. 4-23: Voltage input with sensors in **3-wire** configuration and external power supply

Measuring range 4...20 mA (passive-type 2-pole sensors)

Input currents that exceed the measuring range cause the overflow numerical value of +32767. If the measured value is below the range, the underflow numerical value of -32767 is set.

The input impedance is ca. 330 Ω. The current input has a self-protecting mechanism. If the input current gets too high, the shunt is switched off and the value for range overflow is generated. About every second, the unit tries to switch on the shunt again. In this way the correct measurement will succeed after the current has reached a normal value again.

The trigger of the self-protecting mechanism is displayed by the red LED Ovl as long as the overload is present. In the PLC system an error message is then stored (FK4, error number 4).

The open-circuit monitoring begins below ca. 3 mA. The value of the range underflow is stored. If the open-circuit monitoring is configured, the open-circuit event is displayed by the red LED Ovl as long as it is present. In the PLC system an error message is stored (FK4, error number 9).

The following figure shows the connection of **2-pole passive-type** analog sensors 4...20 mA.

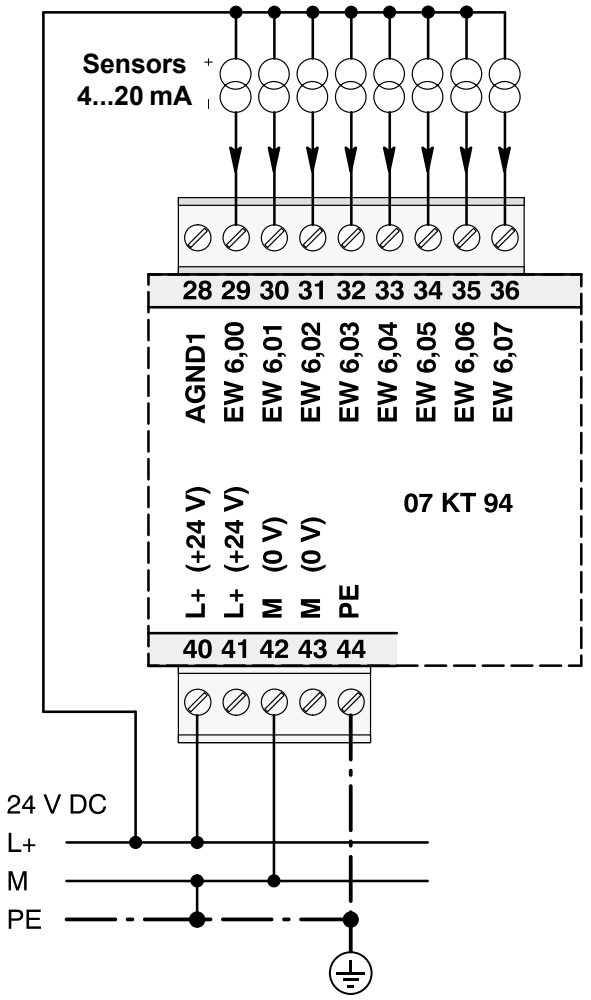

If the analog current sensors 4...20 mA are powered from a separate power supply unit, the reference potentials 0V (of the separate power supply unit and the power supply unit for the 07 KT 94) must be interconnected to each other.
In the above example, the AGND terminal remains unused.

Fig. 4-24: Example for the connection of current sensors 4...20 mA at the analog inputs

Measuring range 0...20 mA
(active-type sensors with external supply voltage)

Input currents that exceed the measuring range cause the overflow numerical value of +32767. If the measured value is below the range, the underflow numerical value of -32767 is set.

The input impedance is ca. 330 Ω. The current input has a self-protecting mechanism. If the input current gets too high, the shunt is switched off and the value for range overflow is generated. About every second, the unit tries to switch on the shunt again. In this way the correct measurement will succeed after the current has reached a normal value again.

The trigger of the self-protecting mechanism is displayed by the red LED Ovl as long as the overload is present. In the PLC system an error message is then stored (FK4, error number 4).

The following figure shows the connection of a 3-wire sensor powered by 24 V DC **and** of a 2-pole sensor powered electrically isolated. Both sensors work as **active current sources** 0...20 mA.

It has to be taken into consideration, that in this application the M terminal of the basic unit 07 KT 94 is the reference potential. AGND1 is not dimensioned for carrying the sum of the sensor currents.

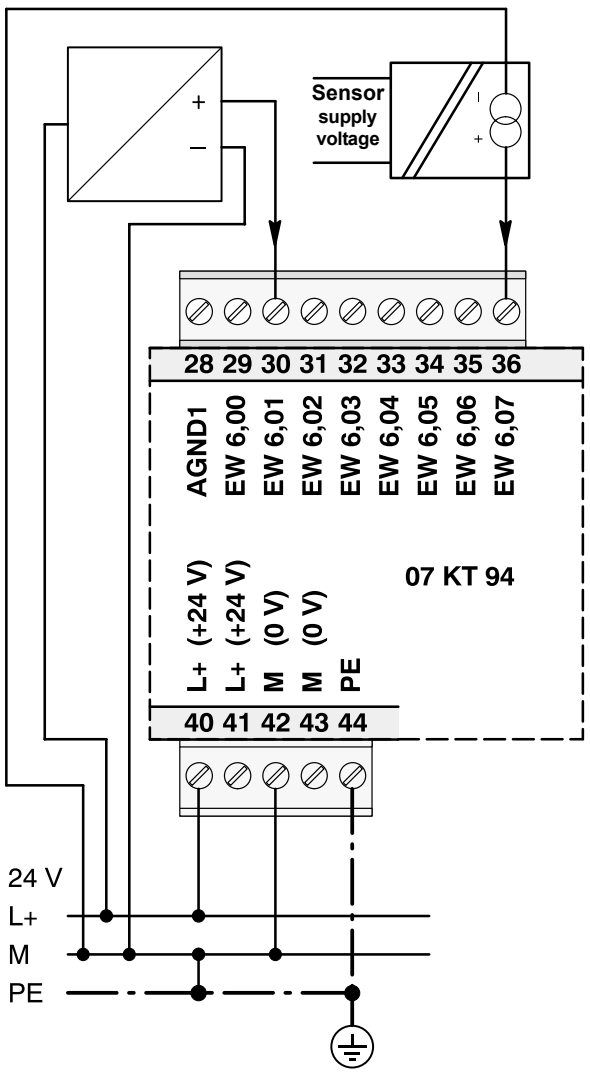

Fig. 4-25: Example for the connection of current sensors 0...20 mA at the analog inputs

Measuring ranges ±10 V / ±5 V / 0...10 V / 0...5 V as differential inputs

Differential inputs are very useful, if analog sensors are used which are remotely non-isolated (e.g. the minus terminal is remotely earthed).

Since the earthing potential is not exactly the same as AGND1, it has to be measured bipolar in order to compensate measuring errors. Additionally, in case of single-pole configuration, AGND1 would be connected directly to the remote earth potential. This would cause inadmissable (and possibly dangerous) earthing loops.

In all configurations using **differential inputs** two adjacent analog inputs belong together (e.g. EW 6,00 and EW 6,01).

For configuration, both inputs must be configured for the desired operating mode, see configuration table Fig. 4-18.

The measured value is calculated by subtraction. The value of the channel with the lower address is subtracted from the value of the channel with the higher address.

The converted measured value is available on the odd address (e.g. EW 6,01).

Important:

The common mode input voltage range equals the measuring range of the single channel. I.e. that the signals, related to AGND, at the two involved inputs must not exceed this measuring range.

Input voltages that exceed the measuring range cause the overflow numerical value of +32767. If the measured value is below the range, the underflow numerical value of -32767 is set.

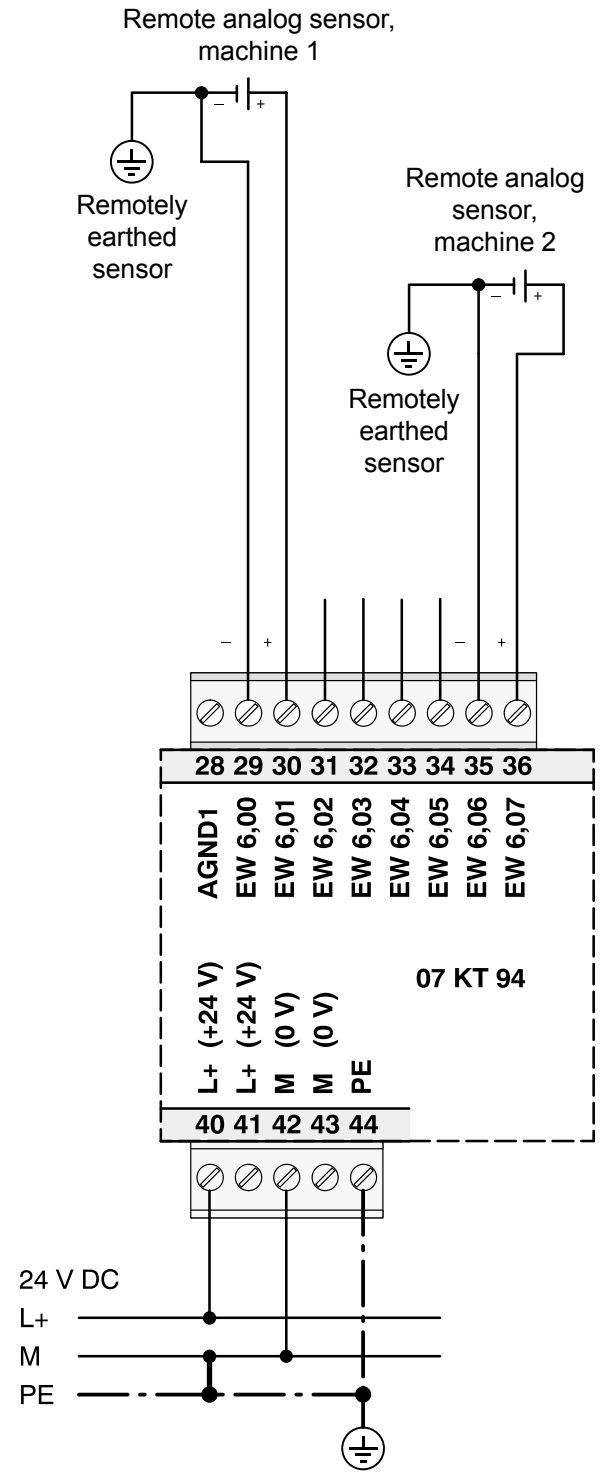

Fig. 4-26: Connection of voltage sensors as differential inputs

Measuring ranges -50°C...+400°C and -50°C...+70°C with Pt100 as temperature sensor in 2-wire configuration

When resistance thermometers are used, a constant current must flow through the measuring resistor in order to create the necessary voltage drop for the evaluation. For this purpose, the basic unit 07 KT 94 provides a constant current sink, which is multiplexed to the 8 analog channels.

The following figure shows the connection of Pt100 resistance thermometers in **2-wire configuration.**

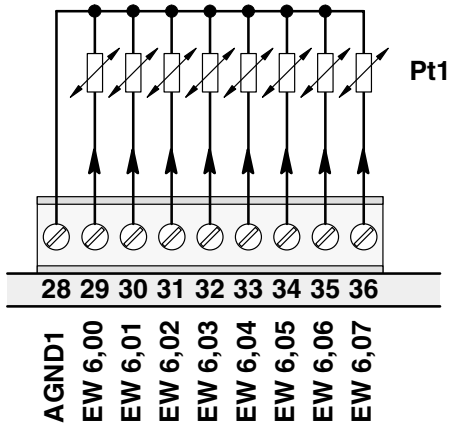

Fig. 4-27: Connection of Pt100 temperature sensors in 2-wire configuration

Depending on the configured operating mode, the measured value is assigned linearly as follows:

Range	assigned numerical value range	
-50 C...400°C	-1022...+8190	($FC02_H$...$1FFE_H$)
-50 C...70°C	-1022...+1433	($FC02_H$...0599_H)

The 07 KT 94 unit linearizes the Pt100 characteristic.

Temperatures that exceed the measuring range cause the overflow numerical value of +32767. If the measured value is below the range, the underflow numerical value of -32767 is set.

In case of a detected open-circuit the numerical value of +32767 is set. If the sensor is short-circuited, the numerical value of -32767 is set.

If the open-circuit or short-circuit monitoring is configured, the detected error is displayed by the red LED Ovl as long as it is present. In the PLC system an error message is stored (FK4, error number 9).

In order to avoid error messages with unused analog inputs, it is useful, **not** to configure this channels for Pt100.

Measuring ranges -50°C...+400°C and -50°C...+70°C with Pt100 as temperature sensor in 3-wire configuration

The following figure shows the connection of Pt100 resistance thermometers in **3-wire configuration.**

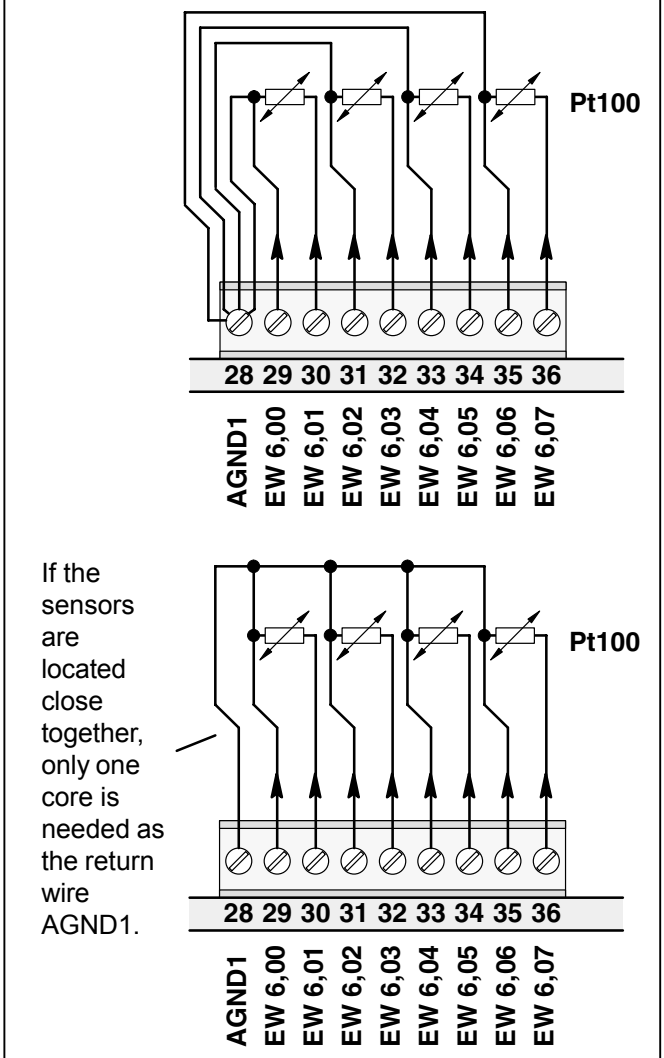

Fig. 4-28: Connection of Pt100 temperature sensors in 3-wire configuration

In the operating mode **"Pt100 in 3-wire configuration"** two adjacent analog inputs belong together (e.g. EW 6,00 and EW 6,01).

For configuration, both inputs must be configured to the desired operating mode, see configuration table Fig. 4-18.

The constant current of the one channel flows through the Pt100 resistance sensor, the constant current of the other channel through one of the wires.

The basic unit 07 KT 94 calculates the measuring value from the two voltage drops and stores it under the odd address (e.g. EW 6,01).

In order to avoid measurement errors, it is absolutely necessary, to lead the cores to the Pt100 sensors in the same cable. The cores must have the same cross section. Per channel, a twisted pair is used (for the two terminals of the Pt100 sensors) plus a single core (half of a twisted pair) for the connection to AGND1.

Depending on the configured operating mode, the measured value is assigned linearly as follows:

Range	**assigned numerical value range**
-50 C...400°C	-1022...+8190 ($FC02_H$...$1FFE_H$)
-50 C...70°C	-1022...+1433 ($FC02_H$...0599_H)

The 07 KT 94 unit linearizes the Pt100 characteristic.

Temperatures that exceed the measuring range cause the overflow numerical value of +32767. If the measured value is below the range, the underflow numerical value of -32767 is set.

In case of a detected open-circuit the numerical value of +32767 is set. If the sensor is short-circuited, the numerical value of -32767 is set.

If the open-circuit or short-circuit monitoring is configured, the detected error is displayed by the red LED Ovl as long as it is present. In the PLC system an error message is stored (FK4, error number 9).

In order to avoid error messages with unused analog inputs, it is useful, **not** to configure this channels for Pt100.

Use of analog inputs as digital inputs

Several (or all) analog inputs can be configured as digital inputs. When doing so, they evaluate input voltages higher than ca. +7 V as signal 1. The input impedance in this operating mode is about 4 kΩ. Terminal M is the reference potential.

The input signal delay is 7 ms. It cannot be configured. The inputs are not electrically isolated.

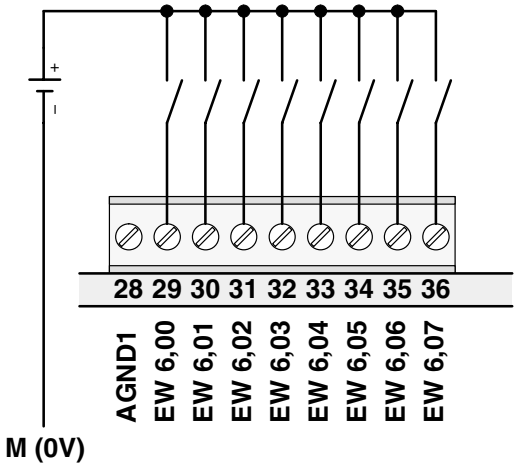

Fig. 4-29: Use of analog inputs as digital inputs

4.4.8 Connection of the 4 configurable analog outputs

The following figure shows the assignment of the 4 configurable analog outputs.

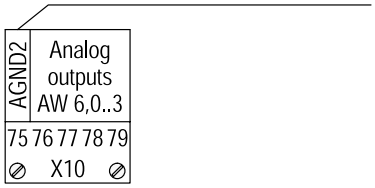

Fig. 4-30: Assignment of the 4 analog outputs

Features of the analog outputs:

– The 4 analog outputs are **not** electrically isolated.

– The resolution of the D/A converter is 12 bits.

– Analog signals are conducted in shielded cables (see Fig. 4-5).

– The analog outputs can be configured individually in a lot of different operating modes. The configuration is performed by setting certain bits in the system constants KW 88,00 to KW 88,03 as follows:

The system constant	Hex value in Low Byte, bits **07 06 05 04 03 02 01 00** mean:
KW 88,00 configures analog output **AW 6,00** **KW 88,01 configures** analog output **AW 6,01** **KW 88,02 configures** analog output **AW 6,02** **KW 88,03 configures** analog output **AW 6,03**	**00_H** = Analog output ±10 V (Default setting) **01_H** = unused **02_H** = Analog output 0...20 mA **03_H** = Analog output 4...20 mA Hex value in High Byte, bits **15 14 13 12 11 10 09 08** mean: no meaning, reserved, may be configured with **00_H**
Note: The (modified) system constants only become effective with the next warm or cold start.	

Fig. 4-31: Configuration of the 4 analog outputs

The measuring ranges of the analog outputs

Resolution in the control system:
All analog output values are converted with a resolution of 12 bits, i.e. either 11 bits plus sign or 12 bits without sign.

Examples:

Range of numerical values	Output value
-32760_D ....0....32760_D 8008_H ...0000 ...$7FF8_H$	-10 V...+10 V
$0...32760_D$ $0000...7FF8_H$	0...20 mA

Further details can be found in volume 2, chapter 5.1 "General information for the use of analog inputs and outputs".

Unused output channels may be left unconnected.

The relationship between numerical values and the output analog signals is illustrated in the following figure.

	15	14	13	12	11	10	9	8	7	6	5	4	3	2	1	0
	-100 %	50 %	25 %	12.5 %	6.25 %	3.13 %	1.56 %	0.78 %	0.39 %	0.20 %	0.10 %	0.05 %	0.02 %	0	0	0
	Sign															
±10 V	-10V	5V	2.5V	1.25V	625mV	313mV	156mV	78mV	39mV	20mV	10mV	5mV	2mV	0	0	0
0...20 mA		10mA	5mA	2.5mA	1.25mA	625µA	313µA	156µA	78µA	39µA	20µA	10µA	5µA	0	0	0
4...20 mA		8mA	4mA	2mA	1mA	500µA	250µA	125µA	62.5µA	31.3µA	16µA	8µA	4µA	+4 mA offset		
Bit values	-32768	16384	8192	4096	2048	1024	512	256	128	64	32	16	8	4	2	1

Measuring range ±10 V **11 bits resolution plus sign,**
Measuring ranges 0...20 mA, 4...20 mA **12 bits resolution without sign,**
the value range of -100...+100 % corresponds to the numerical values 8008_H...$7FF8_H$ (-32760...+32760),
Range overflow: $7FFF_H$ (32767), Range underflow: 8001_H (-32767)

Fig. 4-32: Relationship between the output values and the positions of the bits in the 16-bit word

Output ranges ±10 V / 0...20 mA / 4...20 mA

In case of voltage outputs the max. output current is ±3 mA. The output is short-circuit proof.

In case of current outputs, the range of permissible output load resistors is 0...500 Ω. If in case of an error the outputs are switched off, this means the following:

Configuration ±10 V 0 V
Configuration 0...20 mA 0 mA
Configuration 4...20 mA 0 mA.

The relationship between the numerical values and the analog values given in figure 4-19 (analog inputs) is also valid for the analog outputs.

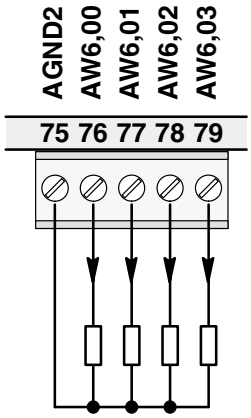

Fig. 4-33: Connection of output load resistors (for voltage or for current outputs) at the analog outputs

Circuit configuration of an analog output

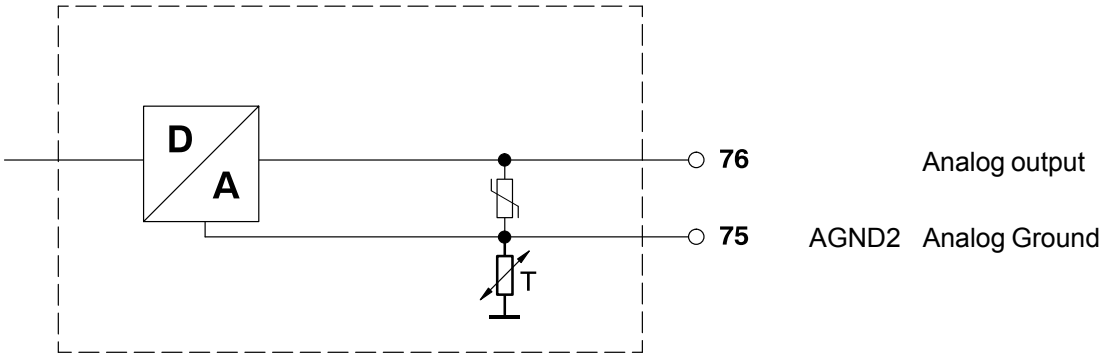

Fig. 4-34: Circuit configuration of an analog output

4.4.9 Battery and battery replacement

- The lithium battery 07 LE 90 can be inserted into the battery compartment in order to
  - backup data of user program in RAM
  - backup data of additionally in RAM contained information, e.g. flag statuses
  - backup of time and date

The battery lifetime is typ. 5 years at 25°C. The battery lifetime is the time during which the device remains operable in order to backup data while the supply voltage of the basic unit is switched off. As long as there is a supply voltage available, there is no more load on the battery other than its own leakage current.

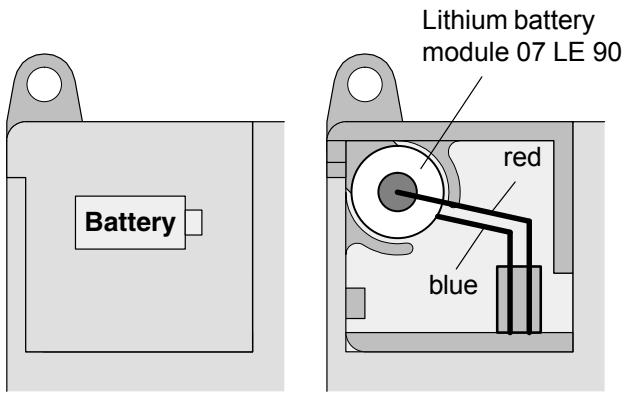

Battery compartment closed

Inserted battery module (cover of the battery compartment is open)

Fig. 4-35: Battery and battery replacement

The following handling notes have to be observed:

- Use only lithium batteries approved by ABB.
- Replace the battery by a new one at the end of its life.
- **Never short-circuit the battery!**
  There is danger of overheating and explosion. Avoid accidental short-circuits, therefore do not store batteries in metallic containers or boxes and do not bring them into contact with metallic surfaces.
- **Never try to charge a battery!**
  Danger of overheating and explosion.
- **Replace the battery only with the supply voltage switched on!**
  Otherwise you risk data being lost.
- **Dispose of battery environmentally consciously!**
- If no battery is inserted or if the battery is exhausted, the red LED "Battery" lights up.

4.4.10 Serial interface COM1

Interface standard: EIA RS-232

Assignment of the serial interface COM1

The serial interface COM1 has the following pin assignment:

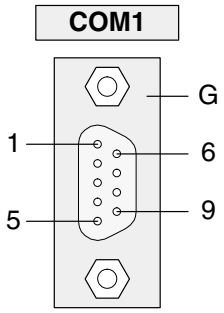

G	Housing	Protective Ground	(Shield)
1	PGND	Protective Ground	(Shield)
2	TxD	Transmit Data	(Output)
3	RxD	Receive Data	(Input)
4	RTS	Request To Send	(Output)
5	CTS	Clear To Send	(Input)
6	PROG *		(Input)
7	SGND	Signal Ground	(0V)
8	0V out		(0V)
9	+5 V out	reserved	

* 1 = Active mode (programming/test)
Pin 6 open
0 = Passive mode (DRUCK/EMAS applications), Pin 6 shorted to 0V out

Fig. 4-36: Assignment of the serial interface COM1

Operating modes of the serial interface COM1

Dependent on the used application
– programming and test or
– man-machine-communication MMC
the operating mode of the interface has to be set accordingly:

Active mode: The active mode is used for programming and testing the basic unit, i.e. it gives the user access to all the programming and test functions of the basic unit.

Passive mode: The passive mode is used to perform a communication configured with the DRUCK and EMAS blocks between the user program and a device connected to the serial interface.

Conditions for setting the operating modes of the interface COM1

RUN/ STOP switch	System constant KW00,06	System cable/ device	Mode set by this
STOP	x	x	Aktive
RUN	1	x	Aktive
RUN	2	x	Passive
RUN	0, <0, >2	07 SK 90	Aktive
RUN	0, <0, >2	07 SK 91	Passive

x: without effect

Temporary interruption of the passive mode

While a communication between the DRUCK or EMAS blocks and a device connected to COM1 is being executed, it may be come necessary to modify the program, for example. For this purpose, you must switch over COM1 from the passive mode into the active mode.

Switch-over: Passive mode —> Active mode

There are three possibilities for switching over:

- Set the RUN/STOP switch to the "STOP" position
- Replace the cable 07 SK 91 by cable 07 SK 90 (if KW 00,06 is set to <0 or >2)
- Send the following special command to the PLC: <DEL><DEL><DEL>

The latter option has the advantage that the switch-over can also be controlled remotely, e.g. via telephone line and suitable dial-up modems. The ASCII character <DEL> has the decimal code of 127 and the hexadecimal code of $7F_H$. You can generate this character by simultaneously pressing the control key <CTRL> and the delete key <--.

Notes:

On German keyboards the control key is labelled by <Strg> instead of <CTRL>.

If the switch-over to the active mode was performed using the special command <DEL> <DEL> <DEL>, please observe the following:

During the execution of the PLC program, the system constant KW 00,06 must **not** be sent to the PLC because this would cause the system to be switched back to the passive mode.

The special command assigns the value of "1" to the image of the system constant KW 00,06 located in the operand memory. The PLC evaluates the value of this image and sets the application mode of COM1 correspondingly.

Switching back: Active mode —> Passive mode

There are three possibilities for switching back:

- Return RUN/STOP switch to the "RUN" position
- Replace cable 07 SK 90 by cable 07 SK 91 again
- Cancel the special command <DEL><DEL><DEL> as follows:

– If the PLC program is in the "aborted" condition:

Start the PLC program.

– If the PLC program is in the "running" condition:

Send the original value of the system constant KW 00,06 to the PLC again (907 PC 33 menu item "Send constants")

or

overwrite the system constant KW 00,06 by the original value (907 PC 33 menu item "Overwriting")

Interface parameters

Active mode: The settings of the interface parameters cannot be changed.

Data bits:	8
Stop bits:	1
Parity bits:	none
Baud rate:	9600
Synchronization:	RTS/CTS

Passive mode: Default setting

Synchronization:	RTS/CTS	
Interface identifier COM1:	1	
Baud rate:	9600	
Stop bits:	1	
Data bits:	8	
Parity bits:	none	
Echo:	off	
Send Break Character:	0	
Enabling End-of-text character for sending direction:	no	1)
Sending End-of-text character:	<CR>	1)
Receiving End-of-text character:	<CR>	2)

1) The default End-of-text character for the sending direction (CR) is not sent. Nevertheless, this default End-of-text character (CR) must not appear in the message of the assigned DRUCK block.

2) For the direction of reception, an End-of-text character is always necessary. This default End-of-text character (CR) must not appear neither in the message text nor in the user data of the assigned EMAS block.

For the passive mode of COM1, the interface parameters can be changed using the SINIT function block. If the changed values are not plausible, the COM1 interface uses the default values.

The interface is newly initialized each time the operating mode is switched over.

The active mode parameters are set in the active mode, whereas in the passive mode the parameters established by the SINIT block or the default values are set.

4.4.11 Serial interface COM2

Interface standard: EIA RS-232

Assignment of the serial interface COM2

The serial interface COM2 has the following pin assignment:

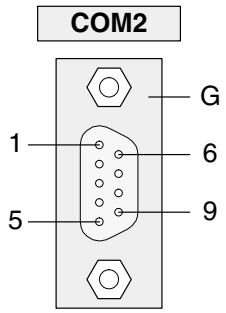

G	Housing	Protective Ground	(Shield)
1	PGND	Protective Ground	(Shield)
2	TxD	Transmit Data	(Output)
3	RxD	Receive Data	(Input)
4	RTS	Request To Send	(Output)
5	CTS	Clear To Send	(Input)
6	NC		
7	SGND	Signal Ground	(0V)
8	0V out		(0V)
9	+5 V out	reserved	

Fig. 4-37: Assignment of the serial interface COM2

Operating modes of the serial interface COM2

The serial interface COM2 is only suitable for the passive mode. In addition, it can be operated as a MODBUS interface.

The passive mode is used to perform a communication configured with the DRUCK and EMAS blocks between the user program and a device connected to the serial interface.

The application-specific initialization of COM2 can be performed using the SINIT function block.

Interface parameters

Passive mode: Default setting

Synchronization:	RTS/CTS	
Interface identifier COM1:	1	
Baud rate:	9600	
Stop bits:	1	
Data bits:	8	
Parity bits:	none	
Echo:	off	
Send Break Character:	0	
Enabling End-of-text character for sending direction:	no	1)
Sending End-of-text character:	<CR>	1)
Receiving End-of-text character:	<CR>	2)

1) The default End-of-text character for the sending direction (CR) is not sent. Nevertheless, this default End-of-text character (CR) must not appear in the message of the assigned DRUCK block.

2) For the direction of reception, an End-of-text character is always necessary. This default End-of-text character (CR) must not appear neither in the message text nor in the user data of the assigned EMAS block.

For the passive mode of COM2, the interface parameters can be changed using the SINIT function block. If the changed values are not plausible, the COM2 interface uses the default values.

In the passive mode the parameters established by the SINIT block or the default values are set.

4.4.12 Networking interface

The 07 KT 94 basic unit is equipped with a special parallel interface. It is thus possible to network it with another bus system using an additional communication processor module.

The additional communication processor has its own housing. Both housings (of the 07 KT 94 and of the communication processor) are assembled by means of a snap-on connection.

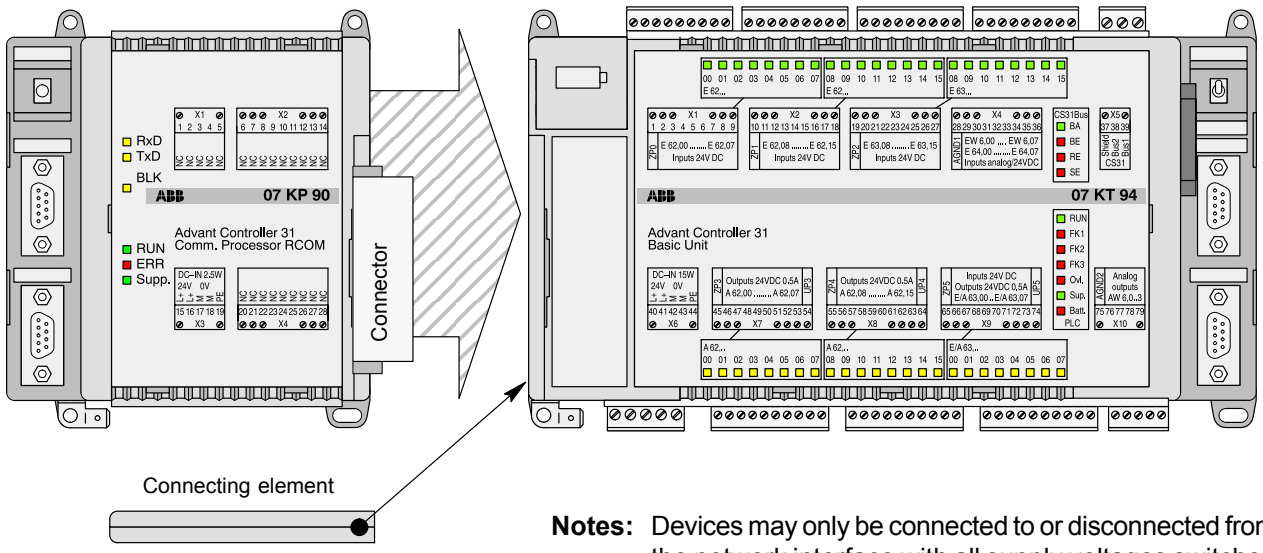

Notes: Devices may only be connected to or disconnected from the network interface with all supply voltages switched off.

In order to assemble the two devices with each other, they must put together on a level ground and then be fastened using the connecting element.

Fig. 4-38: Mounting of 07 KT 94 with expansion (e.g. communication processor 07 KP 90)

4.5 SmartMedia Card

The SmartMedia Card serves for storing data up to 2 MB not being lost over an power OFF/ON cycle. It is used in the 07 KT 94 basic unit. It is recommended only to use ABB-proven SmartMedia Cards.

4.5.1 Field of application

- Storing and loading of PLC programs
  - one separate SmartMedia Card is used for each user program.
- Storing and loading of user data
  - there are 250 data segments with 128 blocks each available (1 block = 32 words).
- Loading of firmware updates

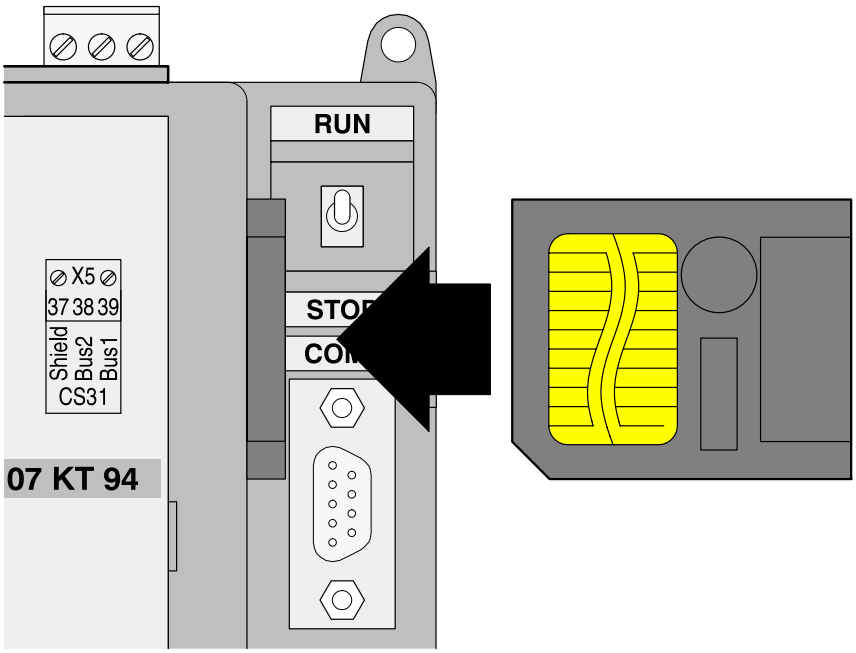

Fig. 4-39: Insertion of the SmartMedia Card

4.5.2 Handling instructions

- The SmartMedia Card is inserted with the contact field visible (see the figure obove).
- A SmartMedia Card, once initialized as user data memory, can no more be used as a user program card (for initialization see "Operating and test functions", volume 7.3).
- The SmartMedia Card must be protected from
  - mechanical stress (e.g. do not bend)
  - electrostatic discharge
  - contact pollution (do not touch the contacts)

4.5.3 Access

- Access to the SmartMedia Card is possible via the programming interface with the aid of the operating and test functions, see volume 7.3, chapter 2.4, commands FCINIT, FCWR, FCRD, FCDEL, SP.
- Access within the PLC program is possible with CEs, see the documentation of the programming software, the CEs are FCWR, FCRD, FCDEL.

4.5.4 How to store a user program in the SmartMedia Card

In order to safe the user program in the SmartMedia Card (SMC Card), a brand new SMC Card is required or another one which has never been initialized as a user data memory.

Sequence of program saving

1. Load PLC user program into the PLC (RAM)
2. While power is ON, insert the SMC Card
3. Activate monitor command "SP".

   The user program is now copied from the PLC's RAM to its Flash EPROM and then loaded into the SMC Card.

An update of the 07 KT 94's operating system (firmware) is not possible with the SMC Card.

4.5.5 How to load the user program from the SmartMedia Card

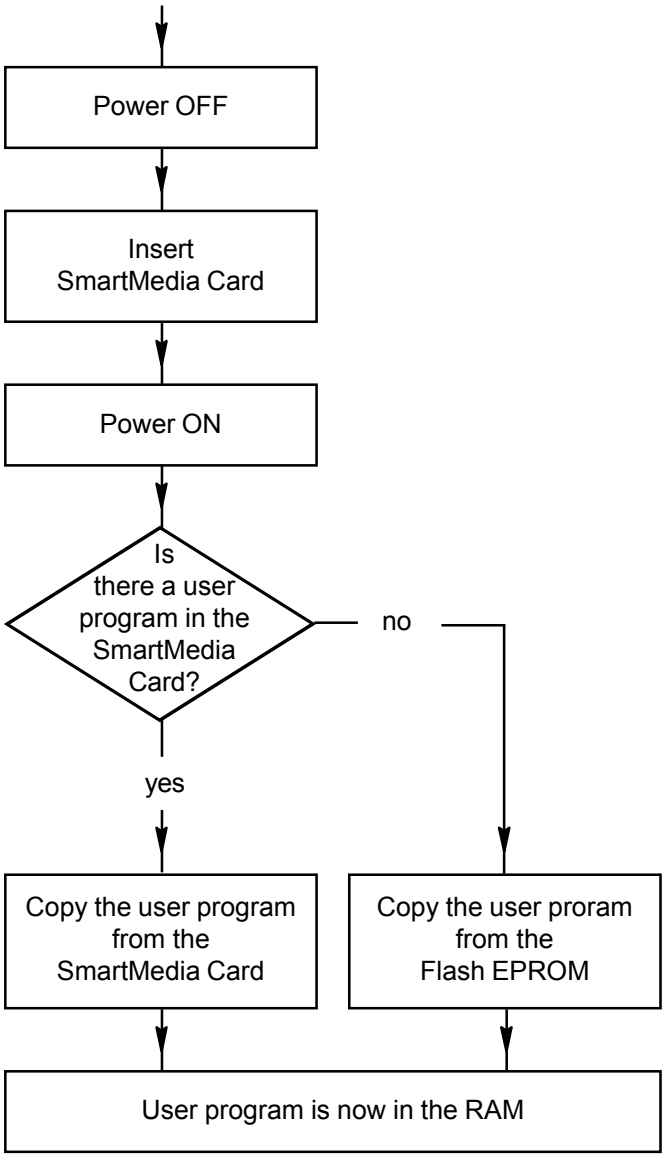

The user program is copied from the SmartMedia Card (or from the Flash EPROPM) to the RAM with all of the following actions:

- Power ON
- Cold start or warm start
- RUN/STOP switch toggled to RUN
- GO

With all these actions, the SmartMedia Card has the higher priority. If the card is inserted, its program is used rather than that from the Flash EPROM.

4.6 High-speed counter

Features

The high-speed counter used in the basic unit 07 KT 94 works independently of the user program and is therefore able to response quickly to external signals. It can be used in seven different and configurable operating modes.

The desired operating mode is set in the system constant KW 85,02 (described later). The configured operating mode is only activated during initialization (power-on, cold start, warm start). For all operating modes, the same function block **COUNTW** is used.

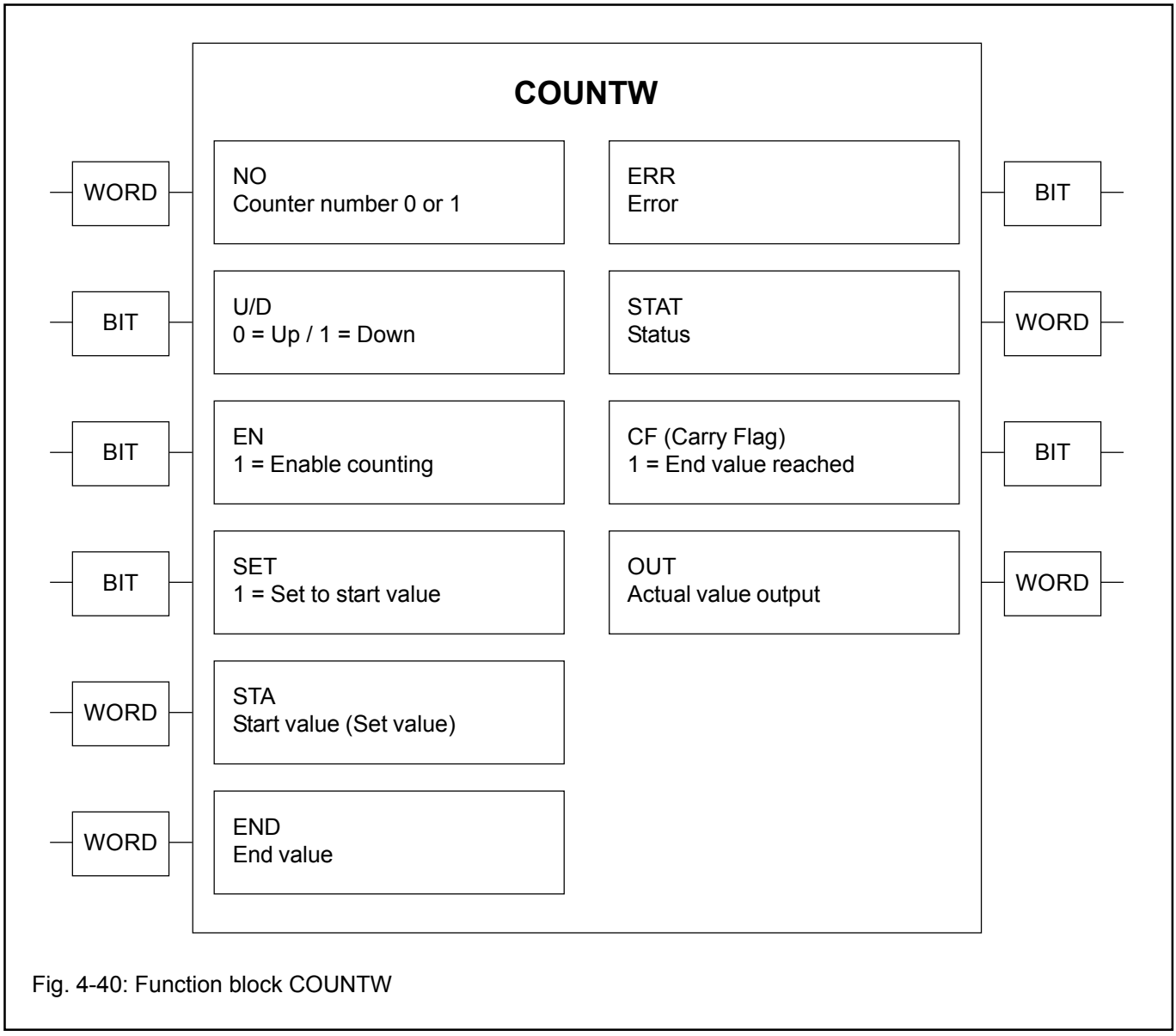

Fig. 4-40: Function block COUNTW

Independent of the selected operating mode, the following features are valid:

- The pulses at the counter input or the evaluated signals at tracks A and B in case of connection of incremental position sensors are counted.
- The maximum counting frequency is 50 kHz.
- The counter uses the terminals 2 (E 62,00) and 3 (E 62,01) as fast inputs and, in one operating mode, also the output terminal 46 (A 62,00). In order to make all binary inputs and outputs available for other purposes than counting, it is possible, to disable the 07 KT 94's counting function.
- The counter can count upwards in all operating modes. It counts beginning at the start value (set value) up to the end value (max. from –32768 to +32767 or from 8000_H to $7FFF_H$). After reaching +32767, the counter jumps with the next pulse to –32768. When the counter reaches the end value END, which was set in the function block, the value CF=1 is stored in the function block. Only when the counter is set again (SET), CF is reset to 0.

- Sequence of the up-counting procedure:

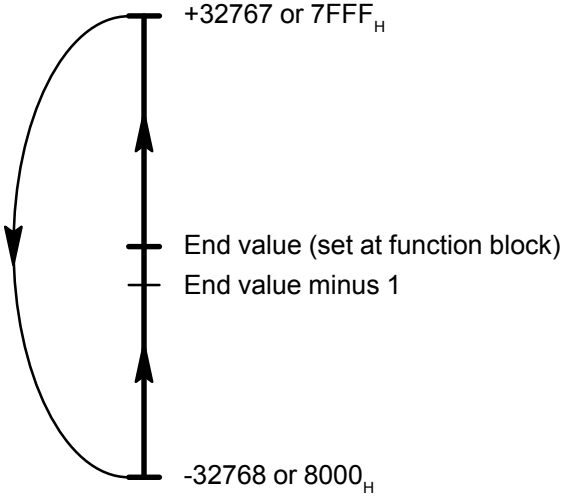

Fig. 4-41: Sequence during up-counting

- In some operating modes, the counter can count downwards, too. If this is wanted, the input U/D (Up/Down) of the function block must be configured to 1. When doing so, the counter starts counting at the start value (set value) down to the end value (max. from +32767 to –32768 or from 7FFF$_H$ to 8000$_H$). After reaching –32768, the counter jumps with the next pulse to +32767. When the counter reaches the end value END, which was set in the function block, the value CF=1 is stored in the function block. Only when the counter is set again (SET), CF is reset to 0.
- Sequence of the down-counting procedure:

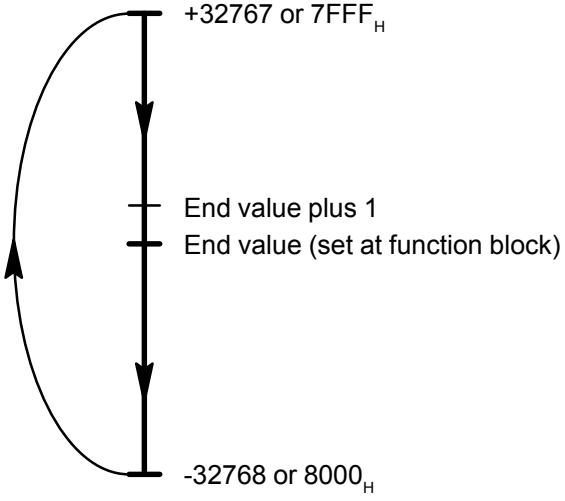

Fig. 4-42: Sequence during down-counting

- Enabling of the counting signals:

  The counting signals must be enabled. This is done depending on the operating mode either via a terminal or with the input EN (Enable) of the function block.

- Setting the counter to a start value:

  The counter can be set to a start value. This value must be present at the input STA (Start value) of the function block. Using the set signal (dependent on the operating mode either via a terminal or with the SET input of the function block) the value of the word variable at STA is written into the counter.

  Note: If the SET and EN signals are present during several processing cycles, the processor sets the counter every program end crossing anew.
  During the rest of the processing cycle the counter counts pulses.

- Reading the counter content:

  The current counter content (actual value) can always be read at the OUT output (actual value output) of the function block.

- Configuring the counter number:

  There are operating modes, where two counters can work independently of each other. Only in this case, the function block is used twice in the program. The first function block is assigned with 0 at input NO (Counter number) and the second function block is assigned with 1 at NO. In other operating modes, NO is assigned with 0.

- Error bit:

  The function block bit output ERR=1 shows, that the STAT (status) output word contains an error code.

- Meaning of the error code in STAT:

  The output word in STAT (status) has the following meaning:

  1...255 = selected operating mode in KW 85,02
  256 = no operating mode selected (KW 85,02 = 0)
  257 = operating mode in KW 85,02 is unknown or forbidden

In the following, it is described, which operating modes can be configured, how to do it and what differences they have.

The configurable operating modes:

The system constant **KW 85,02 configures** the operating mode of the counter	Hex value in Low Byte, bits **07 07 05 04 03 02 01 00** mean: **00_H** = No counter (default setting) **01_H** = Mode 1, one up-counter **02_H** = Mode 2, one op-counter with enable input **03_H** = Mode 3, two up/down counters **04_H** = Mode 4, two up/down counters, at the second counter the falling edges are counted **05_H** = Mode 5, one up/down counter, the set input is edge-triggered (rising edge) **06_H** = Mode 6, one up/down counter, the set input is edge-triggered (falling edge) **07_H** = Mode 7, one up/down counter for position sensors The High Byte is configured with **00_H**.
Note: The (modified) system constants only become effective with the next warm or cold start.	

Fig. 4-43: Configuration of the counter's operating modes

- Operating mode 0: **No counter**

  If the integrated high-speed counter is not used, this setting is selected. All binary inputs and outputs are available for other purposes.

- Operating mode 1: **1 up-counter**

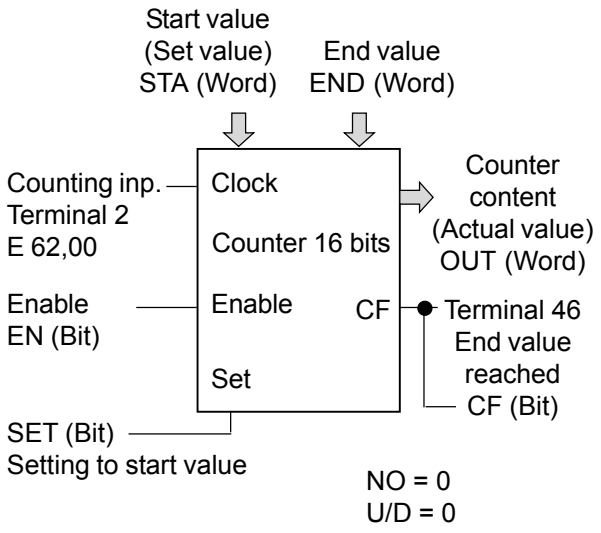

Fig. 4-44: Counter in operating mode 1

The following two terminals are reserved for the counter and cannot be used for other purposes:

Terminal 2 (E62,00): Counting input
Terminal 46 (A62,00): Output ”End value reached”

Enabling of the counting input and of the output ”End value reached” is performed via the function block with EN=1.

- Operating mode 2: **1 up-counter with enable input as terminal**

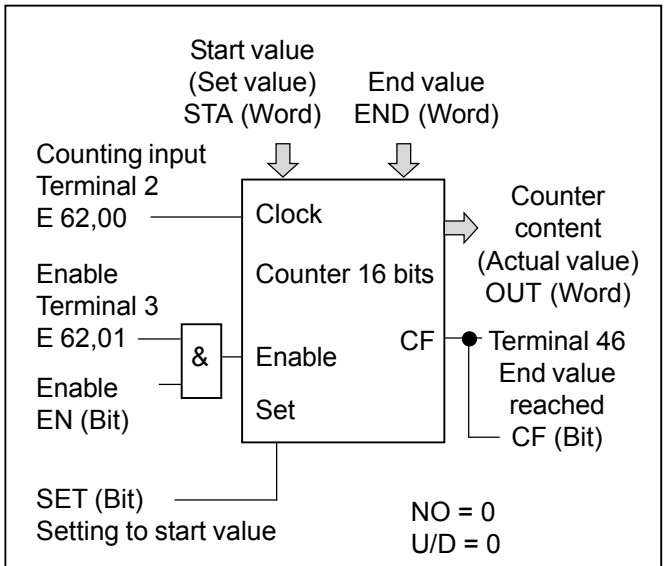

Fig. 4-45: Counter in operating mode 2

The following three terminals are reserved for the counter and cannot be used for other purposes:

Terminal 2 (E62,00): Counting input
Terminal 3 (E62,01): Enable input
Terminal 46 (A62,00): Output ”End value reached”

The enable input enables the counting input as well as the output ”End value reached”.

The counter is only enabled if the enabling input E 62,01 = 1 and at the function block the input EN = 1.

- Operating mode 3: **2 up/down counters**

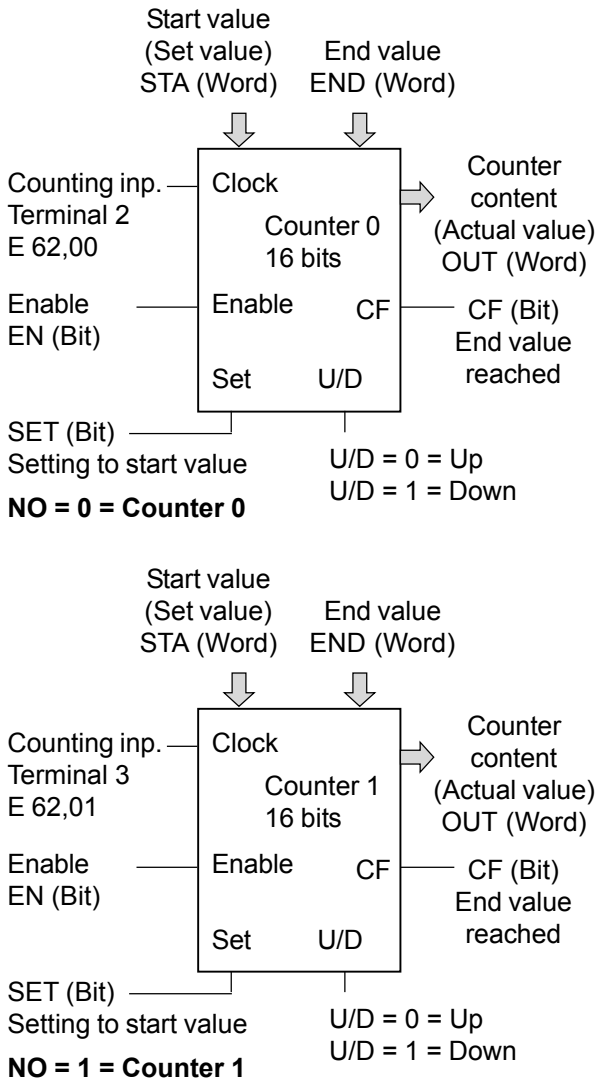

Fig. 4-46: Counter in operating mode 3

In this operating mode exist two counters which work independently of each other. The signal ”End value reached” can only be read from the function blocks, not via terminals.

The following two terminals are reserved for the counters and cannot be used for other purposes:

Terminal 2 (E62,00): Counting input of counter 0
Terminal 3 (E62,01): Counting input of counter 1

The COUNTW function block is needed twice.

Note:
It is not intended to change the counting direction (with U/D) while the counter is running. When U/D is changed, this forces that the counter is set to its start value. After that, the counter starts counting in the new direction.

- Operating mode 4: **2 counters (1 counting input is inverted)**

This operating mode equals operating mode 3 with the only exception, that the second counting input (counter 1) is inverted. It counts the falling edges at terminal 3 (E 62,01).

- Operating mode 5: **1 up/down counter with an edge-triggered set input via terminal**

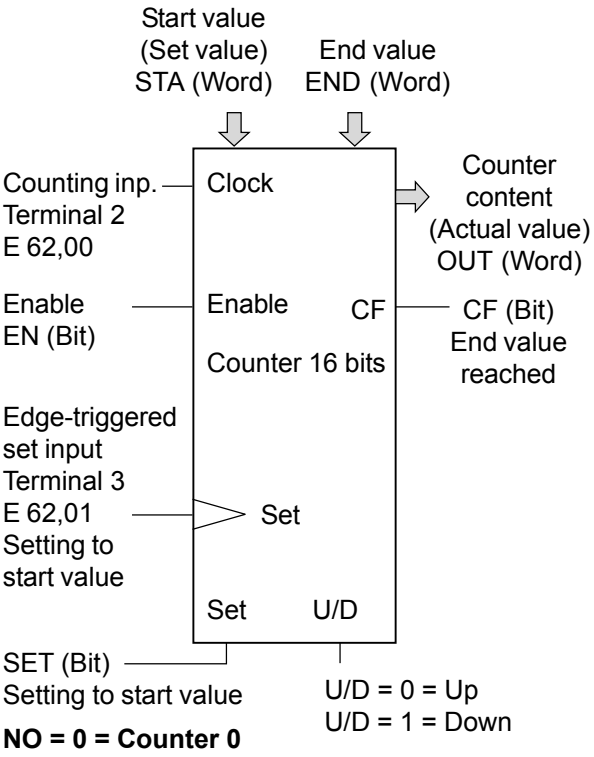

Fig. 4-47: Counter in operating mode 5

In this operating mode, an up/down counter with an edge-triggered set input is available. Edge-triggered means that the set function is effective only on the signal edge and not during the time the signal is high.

The following two terminals are reserved for the counters and cannot be used for other purposes:

Terminal 2 (E62,00): Counting input
Terminal 3 (E62,01): Edge-triggered set input

The edge-triggered set input is in effect on the rising edge at terminal 3.

The signal ”End value reached” can only be read from the function block, not via a terminal.

Note:
It is not intended to change the counting direction (with U/D) while the counter is running. When U/D is changed, this forces that the counter is set to its start value. After that, the counter starts counting in the new direction.

- Operating mode 6:
  1 up/down counter with edge-triggered set input via terminal

  This operating mode equals operating mode 5 with the only exception, that the edge-triggered set input is in effect on the falling edge.

- Operating mode 7:
  Counter for incremental position sensors

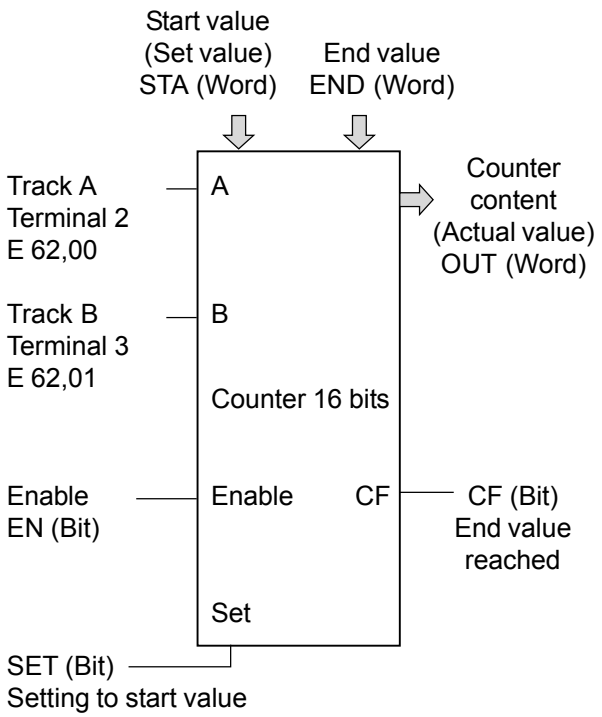

NO = 0 = Counter 0
U/D = 0 (The counting direction is determined by the way the tracks A and B of the incremental sensor send their signals)

Fig. 4-48: Counter in operating mode 7

In this operating mode, incremental position sensors can be used which give their counting signals on tracks A and B in a 90° phase sequence to each other. Dependent on the sequence of the signals at A and B the counter counts up or down. The module has no pulse multiplier (such as x2 or x4).

Only sensors which output 24 V signals can be used. 5 V signals must be converted into 24 V signals. A zero track cannot be connected.

The signal ”End value reached” can only be read from the function block, not via a terminal.

The following two terminals are reserved for the counter and cannot be used for other purposes:

Terminal 2 (E62,00): Track A of the position sensor
Terminal 3 (E62,01): Track B of the position sensor

4.7 Technical Data 07 KT 94

In general, the technical system data listed under ”System data and system configuration” in chapter 1 of volume 2 of the Advant Controller 31 system description are valid. Additional data or data which are different from the system data are listed as follows.

4.7.1 General data

Number of digital inputs	24
Number of digital transistor outputs	16
Number of digital inputs/outputs	8
Number of analog inputs	8
Number of analog outputs	4
I/O expansion via CS31 system bus by up to	992 digital inputs 992 digital outputs 224 analog input channels 224 analog output channels max. 31 remote modules altogether
Number of serial interfaces	2 (for programming or connection to man-machine communication)
Number of parallel interfaces	1 special interface for connection of a communication processor (for networking with other bus systems)
Integrated memory	Flash EPROM 512 kB (240 kB program + 120 kB user data) RAM 2 MB (240 kB program with on-line programming)
Resolution of the integrated real-time clock	1 second
Data of the integrated high-speed hardware counter	
Number of operating modes	7
Counting range	-32768...+32767 (16 bits signed integer)
Counting frequency	max. 50 kHz
Processing time, 65 % bits, 35 % words	typ. 0.3 ms/kB program
Number of software timers	any (max. 80 simultaneously active)
delay time of the timers	1 ms...24.8 days
Number of up/down counter software blocks	any
Number of bit flags	8192
Number of word flags	8192
Number of double word flags	1024
Number of step chains	256
Number of constants KW	1440
Number of constants KD	384
Diagnosis	Cycle time monitoring, battery monitoring, detection of syntax errors and checksum monitoring
Indication of operating statuses and errors	60 LEDs altogether
Wiring method	removable screw-type terminal blocks
Power supply, CS31 system bus	max. 1 x 2.5 mm^2 or max. 2 x 1.5 mm^2 (see also page 4-9)
all other terminals	max. 1 x 1.5 mm^2

4.7.2 Power supply

Rated supply voltage	24 V DC
Current consumption	max. 0.35 A
Protection against reversed polarity	yes

4.7.3 Lithium battery

Battery for backup of RAM contents	Battery module 07 LE 90
Lifetime at 25°C	typ. 5 years

4.7.4 Digital inputs

Number of channels per module	24
Distribution of channels into groups	3 groups of 8 channels each
Common reference potential	
for group 1 (8 channels)	ZP0 (channels 62,00...62,07)
for group 2 (8 channels)	ZP1 (channels 62,08...62,15)
for group 3 (8 channels)	ZP2 (channels 63,08...63,15)
Electrical isolation	between the groups, between groups and other circuitry (see also Fig. 4–4)
Signal coupling of input signals	with optocoupler
Configuration possibilities of the inputs	
Input signal delay	typ. 7 ms (configurable to 1 ms)
Channels E 62,00 and 62,01	configurable for the high-speed counter
Signalling of input statuses	one green LED per channel, the LEDs correspond functionally to the input signals
Input signal voltage	
Signal 0	-30 V...+ 5 V
Signal 1	+13 V...+ 30 V
Input current per channel	
Input voltage = +24 V	typ. 7.0 mA
Input voltage = + 5 V	> 0.2 mA
Input voltage = +13 V	> 2.0 mA
Input voltage = +30 V	< 9.0 mA
Max. cable length, unshielded	600 m
Max. cable length, shielded	1000 m

4.7.5 Digital outputs

Number of channels per module	16 transistor outputs
Distribution of channels into groups	2 groups of 8 channels each
Common supply voltage	
for group 1	UP3 (channels 62,00...62,07)
for group 2	UP4 (channels 62,08...62,15)
Electrical isolation	between the groups, between groups and other circuitry (see also Fig. 4–4)
Signalling of output statuses	one yellow LED per channel, the LEDs correspond functionally to the output signals
Output current	
Rated value	500 mA with UP3/4 = 24 V
Maximum value	625 mA with UP3/4 = 24 V + 25%
Leakage current with signal 0	< 0.5 mA
Demagnitization of inductive loads	internally with a varistor
Switching frequency with inductive loads	max. 0.5 Hz
Switching frequency with lamp loads	max. 11 Hz with max. 5 W

Max. cable length	400 m (pay attention to voltage drops)
Short-circuit proof / overload proof	yes
Protection of the outputs against reversed polarity	yes
Forcing of 24 V DC at the outputs possible	yes
Total load (via UP3 or UP4)	max. 4 A

4.7.6 Digital inputs/outputs

Number of channels per module	8 inputs/outputs
Distribution of channels into groups	1 group with 8 channels
Common reference potential Common voltage supply	ZP5 (channels E/A 63,00...E/A 63,07) UP5 (channels E/A 63,00...E/A 63,07)
Electrical isolation	between the group and the other circuitry (see Fig. 4–4)
Signal coupling of the input signals	with optocoupler
Configuration possibilities of the inputs Input signal delay, channels E 63,00...E 63,07	 typ. 7 ms (configurable to 1 ms)
Signalling of input/output statuses	one yellow LED per channel, the LEDs correspond functionally to the I/O signals
Input signal voltage (if used as inputs)	for details see Fig. 4-16 as well as the chapter "Circuit configuration of the digital inputs/outputs"
Signal 0 Signal 1	-6 V...+ 5 V +13 V...+ 30 V
Input current per channel	see Digital inputs
Output current / switching frequency / inductive loads	see Digital outputs
Max. cable length	see Digital inputs/outputs

4.7.7 Analog inputs

Number of channels per module		8
Distribution of channels into groups		1 group with 8 channels
Common reference potential for group 1 (8 channels)		 AGND1 (channels 06,00...06,07)
Electrical isolation		none (see also Fig. 4–4).
Max. permissible potential difference between Terminal M (minus pole of the power supply voltage) and terminal AGND (analog I/O minus pole)		± 1 V
Signalling of input statuses		none
Configuration possibilities (each channel), see 4.4.7		0...10 V, 0...5 V, ±10 V, ±5 V (also with differential signal) 0...20 mA, 4...20 mA Pt100 -50...+400°C and -50...+70°C (2-wire and 3-wire configuration) digital input
Input impedance per channel,	voltage input current input digital input	> 100 kΩ ca. 330 Ω ca. 4 kΩ

The current input has a self-protecting mechanism. If the input current gets too high, the shunt is switched off and the value for range overflow is generated. About every second, the unit tries to switch on the shunt again. In this way the correct measurement will succeed after the current has reached a normal value again.

Time constant of the input filter	470 µs with voltage, 100 µs with current
Conversion cycle of current and voltage channels	Each configured input channel (U, I, Pt100) increases the conversion cycle of the U/I channels by typ. 1 ms.
Conversion cycle (by filtering time) of Pt100 channels	Each configured input channel (U, I, Pt100) increases the conversion cycle of the Pt100 channels by typ. 50 ms.
Conversion cycle of unused input channels	Input channels configured as "unused" are skipped, i.e. they do not need any conversion time.

Examples for the conversion cycle

Example No.	1	2	3	4	5	6
Channels configured for U/I	1	8 *	-	-	2	4
Channels configured for Pt100	-	-	4	8	2	4
Channels configured as "unused"	7	-	4	-	4	-
Conversion cycle of U/I channels	1 ms	8 ms	-	-	4 ms	8 ms
Conversion cycle of Pt100 channels	-	-	200 ms	400 ms	200 ms	400 ms

* Factory setting

Resolution		10 to 12 bits, depending on the configuration, see also Fig. 4-19
Resolution	range ±10 V	ca. 5 mV
	range 0...10 V	ca. 5 mV
	range 0...20 mA	ca. 5 µA
	range 4...20 mA	ca. 4 µA
Relationship between input signal and hex code		-100 %...0...+100 % = 8008_H...0000_H...$7FF8_H$ (-32760...0...32760 decimal)
Conversion inaccuracy caused by non-linearity, temperature sensitivity, ageing, adjustment error on delivery and resolution:	U, I	typ. 0.5 %, max. 1 %
	Pt100	typ. 1 °C, max. 2 °C
Threshold, if analog input is configured as digital input		ca. 7 V
Max. cable length, 2-core shielded and cross section ≥ 0,5 mm²		100 m

4.7.8 Analog outputs

Number of channels per module	4
Reference potential	AGND2 (channels 06,00...06,03)
Electrical isolation	none (see also Fig. 4–4).
Max. permissible potential difference between Terminal M (minus pole of the power supply voltage) and terminal AGND (analog I/O minus pole)	± 1 V
Signalling of output statuses	none
Output signal ranges (configurable)	-10 V...0...+10 V 0...20 mA 4...20 mA

Output load capability of the voltage outputs	max. ±3 mA
Resolution	12 bits
Resolution (1 LSB), range –10 V...0...+10 V	5 mV
Relationship between output signal and hex code	-100 %...0...+100 % = 8008_H...0000_H...$7FF8_H$ (-32760...0...32760 decimal)
Conversion cycle for outputs	typ. 1 ms for each configured output channel
Conversion inaccuracy caused by non-linearity, temperature sensitivity, ageing, adjustment error on delivery and resolution	typ. 0.5 %, max. 1 %
Max. cable length, 2-core shielded and cross section ≥ 0,5 mm²	100 m

4.7.9 Connection of serial interface COM1

Interface standard	EIA RS-232
Programming with 907 PC 33 / 907 PC 331	with IBM PC (or compatible)
Man-machine communication	yes, e.g. with an operating station
Display and updating of timers, counters and parameters	yes
Electrical isolation	versus digital inputs and outputs, versus CS31 system bus interface (see also Fig. 4–4)
Potential differences	In order to avoid potential differences between the 07 KT 94 basic unit and the peripheral device connected to the COM1 interface, this device is supplied from the switch-gear cabinet socket (see also the earthing connections in Fig. 4-5).
Pin configuration and description of the COM1 interface	see chapter 4.4.10

4.7.10 Connection of serial interface COM2

Interface standard	EIA RS-232
Man-machine communication	yes, e.g. with an operating station
Electrical isolation	versus digital inputs and outputs, versus CS31 system bus interface (see also Fig. 4–4)
Potential differences	see COM1
Pin configuration and description of the COM2 interface	see chapter 4.4.11

4.7.11 Connection to the CS31 system bus

Interface standard	EIA RS–485
Connection as a Master PLC as a Slave PLC	yes, transmitting and receiving areas are configurable yes, see chapter ”System constants” (Appendix B7.3)
Setting of the CS31 module address	yes, by system constant, stored in Flash EPROM of the Slave PLC
Electrical isolation	versus supply voltage, inputs and outputs, versus interfaces COM1/COM2 (see also Fig. 4-4)
Terminal assignment and description of the CS31 bus interface	see chapter 4.4.3

4.7.12 LED displays

LEDs for indication of:

– Statuses of digital inputs	1 green LED per channel
– Statuses of digital outputs	1 yellow LED per channel
– Statuses of digital inputs/outputs	1 yellow LED per channel
– Power supply on	1 green LED
– Battery	1 red LED
– Program is running (RUN)	1 green LED
– Error classes (FK1, FK2, FK3)	1 red LED per error class
– CS31 system bus is running (BA)	1 green LED
– bus-specific errors (BE, RE, SE)	3 red LEDs
– Overload/short-circuit of digital outputs	1 red LED

4.7.13 High-speed hardware counter (see 4.6 High-speed counter)

Data of the integrated high-speed hardware counter:

Configurable	in 7 operating modes
Counting range	-32768...+32767 (16 bits)
Counting frequency	max. 50 kHz
Used inputs	E 62,00 and E 62,01
Used outputs	A 62,00

4.7.14 Mechanical data

Mounting on DIN rail	according to DIN EN 50022–35, 15 mm deep. The DIN rail is located in the middle between the upper and the lower edge of the module.
Fastening by screws	with 4 screws M4.
Width x height x depth	240 x 140 x 85 mm
Wiring method	by removable terminal blocks with screw-type terminals
Power supply terminals, CS31 system bus	max. 1 x 2.5 mm^2 or max. 2 x 1.5 mm^2
All other terminals	max. 1 x 1.5 mm^2
Weight	1.6 kg
Dimensions for mounting	see the following drawing

In order to be able to insert or remove the SmartMedia Card, 30 mm of free space is necessary beginning at the right edge of the housing. The SmartMedia Card has a width of 45 mm and a height of 37 mm.

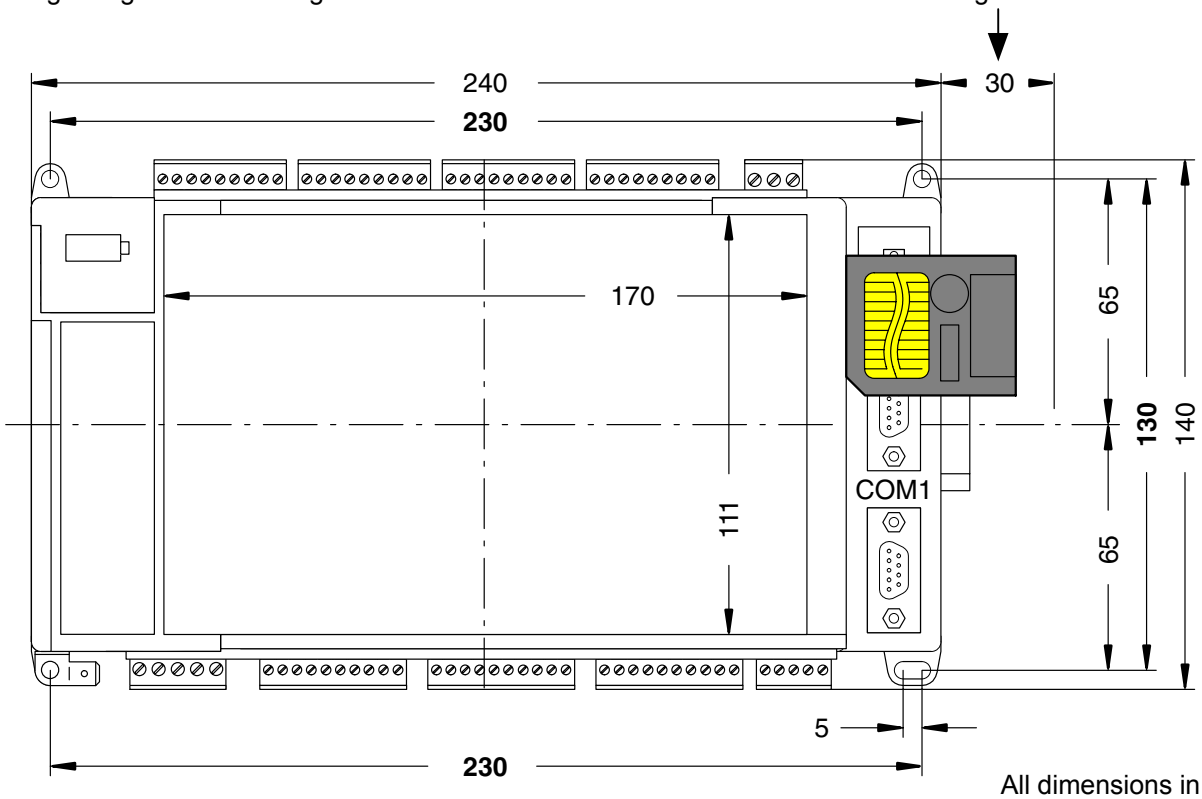

All dimensions in mm.

The device is 85 mm deep. The interface connectors COM1/COM2 are set deeper so that the mounting depth required does not become any larger even with detachable interface cables. If, however, a DIN rail is used, the mounting depth is increased by the overall depth of the rail.

The dimensions for assembly bore holes are printed in bold print.

4.7.15 Mounting hints

Mounting position	vertical, terminals above and below
Cooling	The natural convection cooling must not be hindered by cable ducts or other material mounted in the switch-gear cabinet.

4.7.16 Ordering data

Basic unit 07 KT 94 R101	Order No. GJR5 2521 00 R0101
Basic unit 07 KT 94 R161	Order No. GJR5 2521 00 R0161
Scope of delivery	Basic unit 07 KT 94 R101 / R161 1 5-pole terminal block (5.08 mm) 1 3-pole terminal block (5.08 mm) 3 10-pole terminal blocks (3.81 mm) 4 9-pole terminal blocks (3.81 mm) 1 5-pole terminal block (3.81 mm)

Accessories

System cable 07 SK 90	Order No. GJR5 2502 00 R1
System cable 07 SK 91	Order No. GJR5 2503 00 R1
System cable 07 SK 92	Order No. GJR5 2504 00 R1
Battery module 07 LE 90	Order No. GJR5 2507 00 R1
SmartMedia Card 07 MC 90	Order No. GJR5 2526 00 R0101

Programming and test software and operating manual
(both 907 PC 33 **and** 907 PC 331 are required)

907 PC 33 German 1)	Order No. GJP5 2039 00 R302
907 PC 33 English 1)	Order No. GJP5 2040 00 R302
907 PC 331 German 2)	Order No. GJP5 2045 00 R402
907 PC 331 English 2)	Order No. GJP5 2046 00 R402

Further literature

System description ABB Procontic CS31 German	Order No. GATS 1316 99 R1002
System description ABB Procontic CS31 English	Order No. FPTN 4400 04 R2001

1) Description General Part
2) Description 07 KR 91, 07 KT 92, 07 KT 93, 07 KT 94 Specific Part + Software diskettes

4.10 Communication via the MODBUS interface COM2

4.10.1 Protocol description

The MODBUS protocol is used worldwide. The **MODICON MODBUS® RTU** protocol was integrated in the 07 KT 94 basic unit.

Numerous automation devices such as PLCs, displays, frequency converters or monitoring systems feature by default, or as an option, a MODBUS® RTU interface and can therefore easily communicate with the 07 KT 94 basic unit via the serial interface COM2 (RS-232).

MODBUS® is a master-slave protocol. The master sends a request to the slave and then receives the reply of the slave.

Description of the MODBUS® protocol:

Supported standard	EIA RS-232
Number of connection points	1 master max. **1** slave with RS-232 interface max. **31** slaves with R232/RS485 converter
Protocol	MODBUS® (master/slave)
Data transmission control	CRC 16
Data transmission speed	up to 9600 baud
Maximum length	on RS485: 1200 m with 9600 baud

The MODBUS® frames transmitted by the master contain the following information:

- the MODBUS® address of the interrogated slave (1 byte)
- the function code, defining the master request (1 byte)
- the data to be exchanged (N bytes)
- the CRC16 control code (2 bytes)

Only the following MODBUS® operation codes may be processed by the 07 KT 94 basic unit:

Function codes (hex)	Description
01 or 02	Read n bits
03 or 04	Read n words
05	Write a bit
06	Write a word
0F	Write n bits
10	Write n words

4.10.2 MODBUS operating modes of the COM2 interface:

a) MODBUS master (KW 00,06 = 100)

The message interchange with the slave(s) is handled by the MODMASTK CE. The MODMASTK CE sends the MODBUS request message to the slave via COM2 and receives the MODBUS reply from the slave via the COM2 interface.

The following has to be used:

- one MODMASTK CE for bit operations
- one MODMASTK CE for word operations and
- one MODMASTK CE for double word operations

b) MODBUS slave (KW 00,06 = 100 + slave number)

No CE is necessary for the MODBUS communication.

c) Initialization of the COM2 interface

The interface is set to **9600 bits/s, 8 data bits, 1 stop bit, no parity** by default.

If necessary, these parameters can be changed with the **SINIT** function block.

4.10.3 MODBUS messages

The sending and receiving messages listed below are not visible in the PLC. However, if necessary, they can be made visible on the data line between master and slave with a serial data analyzer.

The number of user data depends on the features of the master **and** of the slave.

In the following examples the slave is a SST MODBUS device. If other devices are used, features can differ.

A detailed example program can be requested from our helpline.

FCT 1 or 2: Read n bits

n = 1...96

Request

Slave number	Function code	Address		No. of bits		CRC	
		High	Low	High	Low	High	Low

Reply

Slave number	Function code	No. of bytes	...Data...	CRC	
				High	Low

Example: Master reads M 01,04 = 0; M 01,05 = 1; M 01,06 = 0 from the slave 1
Source address in the slave M01,04: $2014_H = 8212_D$
The read data are stored in the master starting with M 10,01 (target address).

MODBUS request of the master

Slave number	Function code	Address		No. of bits		CRC	
		High	Low	High	Low	High	Low
01	01	20	14	00	03	37	CF

MODBUS reply of the slave

Slave number	Function code	No. of bytes	Data	CRC	
				High	Low
01	01	01	02	D0	49

Parametrization of the inputs of the MODMASTK CE

FREI	COM	SLAV	FCT	ADDR	NB	DATA
0 → 1	2	1	1	8212	3	M 10,01

FCT 3 or 4: Read n words

n = 1...96

Request

Slave number	Function code	Address		No. of words		CRC	
		High	Low	High	Low	High	Low

Reply

Slave number	Function code	No. of bytes	...Data...	CRC	
				High	Low

Example: Master reads MW 00,04 = 4; MW 00,05 = 5; MW 00,06 = 6 from the slave 1
Source address in the slave MW 00,04: $2004_H = 8196_D$
The read data are stored in the master starting with MW 10,01 (target address).

MODBUS request of the master

Slave number	Function code	Address		No. of words		CRC	
		High	Low	High	Low	High	Low
01	03	20	04	00	03	4F	CA

MODBUS reply of the slave

Slave number	Function code	No. of bytes	Data 1		Data 2		Data 3		CRC	
			High	Low	High	Low	High	Low	High	Low
01	03	06	00	04	00	05	00	06	40	B6

Parametrization of the inputs of the MODMASTK CE

FREI	COM	SLAV	FCT	ADDR	NB	DATA
0 → 1	2	1	3	8196	3	MW 10,01

FCT 3 or 4: Read n double words

The function code "Read double words" is not defined in the MODBUS/RTV standard. Therefore the combination of the double word from Low Word and High Word (manufacturer-specific).

n = 1...48

Request

Slave number	Function code	Address		No. of words		CRC	
		High	Low	High	Low	High	Low

Reply

Slave number	Function code	No. of bytes	...Data...		CRC	
			High	Low	High	Low

Example: Master reads MD 00,02 = 32; MD 00,03 = 80000 from the slave 1
Source address MD 00,02: $4002_H = 16386_D$
The read data are stored in the master starting with MD 00,00 (target address).

MODBUS request of the master

Slave number	Function code	Address		No. of words		CRC	
		High	Low	High	Low	High	Low
01	03	40	02	00	04	F0	09

MODBUS reply of the slave

Slave number	Function code	No. of Bytes	Data 1		Data 2		Data 3		Data 4		CRC	
			High	Low	High	Low	High	Low	High	Low	High	Low
01	03	08	00	00	00	20	00	01	38	80	57	B0

Parametrization of the inputs of the MODMASTK CE

NB = Number of MD * 2

FREI	COM	SLAV	FCT	ADDR	NB	DATA
0 → 1	2	1	3	16386	4	MD 00,00

FCT 5: Write 1 bit

n = 1
Data: Bit = 0: 00 00
Bit = 1: FF 00

Request

Slave	Function	Address		Data		CRC	
number	code	High	Low	High	Low	High	Low

Reply

Slave	Function	Address		Data		CRC	
number	code	High	Low	High	Low	High	Low

Example: Master writes M 01,07 = 1 in the slave 1
Source address in the master: M10,01 = 1
Target address in the slave: M 01,07 = $2017_H = 8215_D$

MODBUS request of the master

Slave	Function	Address		Data		CRC	
number	code	High	Low	High	Low	High	Low
01	05	20	17	FF	00	37	FE

MODBUS reply of the slave (reflection)

Slave	Function	Address		Data		CRC	
number	code	High	Low	High	Low	High	Low
01	05	20	17	FF	00	37	FE

Parametrization of the inputs of the MODMASTK CE

FREI	COM	SLAV	FCT	ADDR	NB	DATA
0 → 1	2	1	5	8215	1	M 10,01

FCT 6: Write 1 word

n = 1

Request

Slave	Function	Address		Data		CRC	
number	code	High	Low	High	Low	High	Low

Reply

Slave	Function	Address		Data		CRC	
number	code	High	Low	High	Low	High	Low

Example: Master writes to MW 00,07 in the slave 1 the value of 7
Source address in the master: MW 10,01 = 7
Target address in the slave: MW 00,07 = 7
$2007_H = 8199_D$

MODBUS request of the master

Slave number	Function code	Address		Data		CRC	
		High	Low	High	Low	High	Low
01	06	20	07	00	07	72	09

MODBUS reply of the slave (reflection)

Slave number	Function code	Address		Data		CRC	
		High	Low	High	Low	High	Low
01	06	20	07	00	07	72	09

Parametrization of the inputs of the MODMASTK CE

NB = Number of MD * 2

FREI	COM	SLAV	FCT	ADDR	NB	DATA
0 → 1	2	1	6	8199	1	MW 10,01

FCT 15: Write n bits

n = 1...192 (if 07 KT 94 is MODBUS slave)

Request

Slave number	Function code	Address		No. of bits		No. of bytes	...Data...	CRC	
		High	Low	High	Low			High	Low

Reply

Slave number	Function code	Address		No. of bits		CRC	
		High	Low	High	Low	High	Low

Example: Master writes the bit pattern M 01,01 = 1, M 01,02 = 0, M 01,03 = 1 to the slave 1
Source address in the master: M 01,01 = 1, M 01,02 = 0, M 01,03 = 1
Target address in the slave: $2011_H = 8209_D$

MODBUS request of the master

Slave number	Function code	Address		No. of bits		No. of bytes	Data	CRC	
		High	Low	High	Low			High	Low
01	0F	20	11	00	03		05	B4	37

MODBUS reply of the slave

Slave number	Function code	Address		No. of bits		CRC	
		High	Low	High	Low	High	Low
01	0F	20	11	00	03	4E	0F

Parametrization of the inputs of the MODMASTK CE

FREI	COM	SLAV	FCT	ADDR	NB	DATA
0 → 1	2	1	15	8209	3	M 01,01

FCT 16: Write n words

n = 1...96 (if 07 KT 94 is MODBUS slave)

Request

Slave number	Function code	Address		No. of words		No. of bytes	...Data...		CRC	
		High	Low	High	Low		High	Low	High	Low

Reply

Slave number	Function code	Address		No. of bits		CRC	
		High	Low	High	Low	High	Low

Example: Master writes the values of 1,2,3 to MW 01,01, MW 01,02, MW 01,03 in the slave 1
Source address in the master: MW 01,01 = 1, MW 01,02 = 2, MW 01,03 = 3
Target address in the slave : $2001_H = 8193_D$

MODBUS request of the master

Slave number	Function code	Address		No. of words		No. of bytes	Data 1		Data 2		Data 3		CRC	
		High	Low	High	Low		High	Low	High	Low	High	Low	High	Low
01	10	20	01	00	03	06	00	01	00	02	00	03	C0	84

MODBUS reply of the slave

Slave number	Function code	Address		No. of words		CRC	
		High	Low	High	Low	High	Low
01	10	20	01	00	03	DA	08

Parametrization of the inputs of the MODMASTK CE

FREI	COM	SLAV	FCT	ADDR	NB	DATA
0 → 1	2	1	16	8193	3	MW 01,01

FCT 16: Write n double words

The function code "Write double words" is not defined in the MODBUS/RTV standard. Therefore the combination of the double word from Low Word and High Word (manufacturer-specific).

n = 1...48

Request

Slave number	Function code	Address		No. of words		No. of bytes	...Data...		CRC	
		High	Low	High	Low		High	Low	High	Low

Reply

Slave number	Function code	Address		No. of bits		CRC	
		High	Low	High	Low	High	Low

Example: Master writes the values of 18 and 65561 to MD 00,00 and MD 00,01 in the slave 1
Source address in the master: MD 00,00 = 18, MD 00,01 = 65561
Target address in the slave: $4000_H = 16384_D$

MODBUS request of the master

Slave No.	Func. code	Address		No. of words		No. of bytes	Data 1		Data 2		Data 3		Data 4		CRC	
		High	Low	High	Low		High	Low	High	Low	High	Low	High	Low	High	Low
01	10	40	00	00	04	08	00	00	00	12	00	01	00	19	60	B3

MODBUS reply of the slave

Slave number	Function code	Address		No. of words		CRC	
		High	Low	High	Low	High	Low
01	10	40	00	00	04	D4	0A

Parametrization of the inputs of the MODMASTK CE

NB = Number of MD * 2

FREI	COM	SLAV	FCT	ADDR	NB	DATA
0 → 1	2	1	16	16384	4	MD 00,00

Error codes

Send:

SLAVE	FCT v 80H	ERR	CRCL	CRCH

Error code 0 = No error is present

Error code 1 = Function is not supported by the slave

Error code 2 = Address error, slave does not have the required data at the given address

Error code 3 = Data error

Error code 9 = Timeout error, slave does not respond within the timeout period

Error code 10 = Checksum error

Error code 16 = Initialization error (interface is not initialized as a master or coupler is initialized by another module)

Error code 17 = Parameter has an error

Example: Address error

Received after reading n words (code 03_H):

01 83 02 C0 C0

with $83_H = 80_H + 03_H$

4.10.4 Connection element MODMASTK

The CE has to be used in the MODBUS master operation mode of the interface COM2 (KW 00,06 = 100). The CE manages the communication Send message to the slave / Receive reply from the slave.

MODMASTK is contained in the programming and test software 907 PC 331 R0402.

The function block MODMASTK performs the master function for the MODBUS.

Dependent on the transaction mode (M, MW or MD) a separate MODMASTK CE has to be used.

The function block is triggered with a 0→1 edge at the FREI input.

FBD/LD

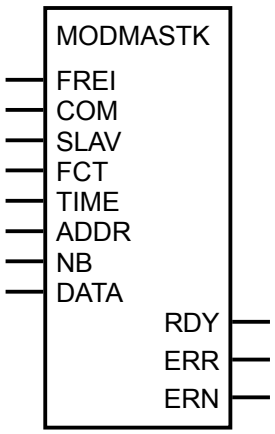

Parameters

FREI	BINARY	M	Enable for block processing
COM	WORD	KW	Interface identifier, always 2
SLAV	WORD	MW, KW	Slave number (1...254)
FCT	WORD	MW, KW	Function number
TIME	WORD	MW, KW	Timeout in ms
ADDR	WORD	MW, KW	Register address in the slave
NB	WORD	MW, KW	Number of data for read/write operations
DATA	WORD DOUBLE WORD	AW, EW, MW, KW MD, KD	The first value of a data field, from which data is written to the slave (write operation) or to which data is stored after reading from the slave (read operation).
RDY	BIN	M	Ready
ERR	BIN	M	Communication error ERR = 0: Communication without error ERR = 1: Communication with error
ERN	WORD	AW, MW	Error number

Description

FREI BINARY

A 0→1 edge at the FREI input starts a master request. If several MODMASTK CEs are used, it has to be made sure that only one of them is enabled at the FREI input at the same time.

COM WORD

The number of the selected COM interface is assigned to the COM input. This number is always 2.

TIME WORD

Timeout in ms. If no response is received from the slave within the period defined at the TIME input, ERR = 1 and ERN = 9 is generated (for the duration of one PLC cycle, see example program).

ADDR WORD

Register address in the slave.

The access to AC31 operands in the slave mode is defined by the following MODBUS cross reference list.

Complete cross reference list

MODBUS address hexadecimal	Operand identifier	
0000	E 00,00	Binary inputs
:	:	
03FF	E 63,15	
1000	A 00,00	Binary outputs
:	:	
13FF	A 63,15	
2000	M 00,00	Binary flags
:	:	
2FFF	M 255,15	
3000	S 00,00	Step chains
:	:	
30FF	S 15,15	
0000	EW 00,00	Word inputs
:	:	
007F	EW 07,15	
1000	AW 00,00	Word outputs
:	:	
107F	AW 07,15	
2000	MW 00,00	Word flags
:	:	
2FFF	MW 255,15	
3000	KW 00,00	Word constants
:	:	
327F	KW 39,15	
4000	MD 00,00	Double word flags
:	:	
41FF	MD 31,15	
5000	KD 00,00	Double word constants
:	:	
507F	KD 07,15	

NB WORD

Number of data which are written to the slave or read from it.

ERR BIN

The ERR output shows errors occurred during processing the MODMASTK CE.

ERN WORD

0: No error occurred

1: Function is not supported by the slave

2: Address error, slave does not have the required data at the given address

3: Data error

9: Timeout error, slave does not respond within the timeout period

10: Checksum error

16: Initialization error (interface is not initialized as a master or coupler is occupied by another module)

17: Parameter with error

Controlling the inputs and outputs of the CE

The FREI input and the outputs RDY (ready), ERR (error) and ERN (error number) have to be considered together.

FREI: 0→1 edge triggers the task

RDY = 1: MODBUS master is ready for the task

RDY = 0: MODBUS master is busy

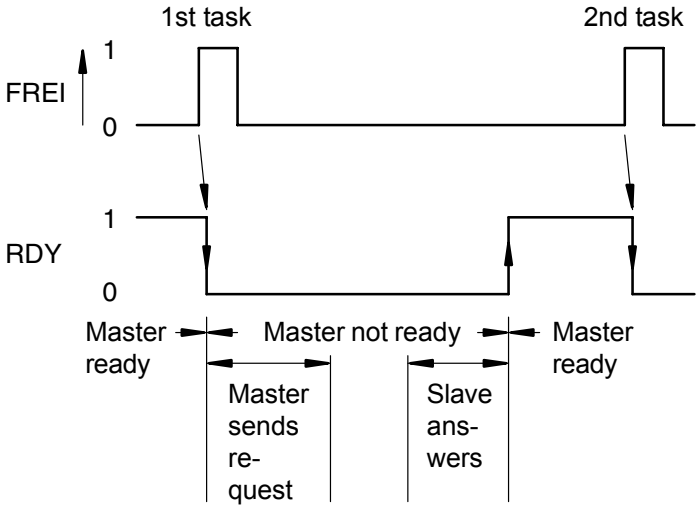

Example program:
07 KT 94 COM2 (master) ↔ 07 KP 93 (slave)

Task: Read bits M 01,04, M 01,05 and M 01,06 in the slave 1 (07 KP 93) with maximum frequency (high polling). The data are stored in the master in M 15,00, M 15,01 and M 15,02.

PLC program

Step chain written against the cycle (head first)

REPLY ARRIVED → M 15,01 = 1

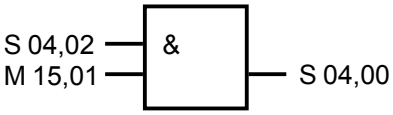

COM2 SENDS REQUEST (M 15,01 = 0) → FREI = 0

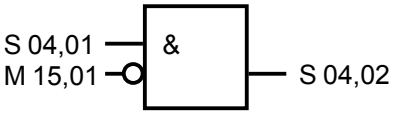

COM2 READY (M 15,01 = 1) → FREI = 1

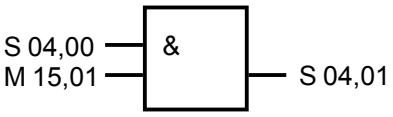

MODBUS master CE

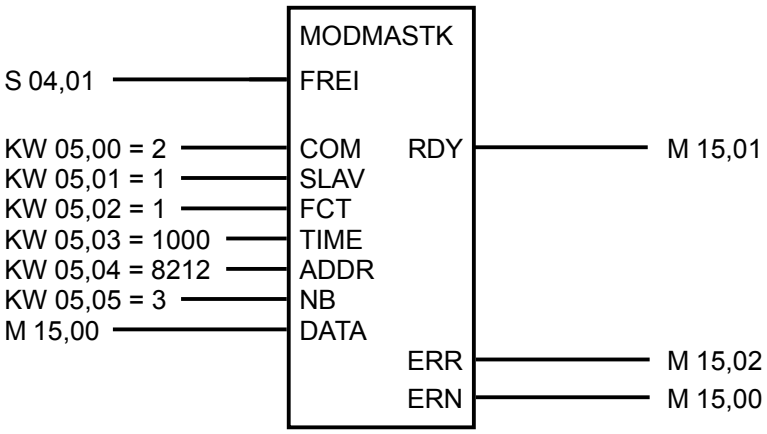

Store ERN: The occurred error number is stored in MW 15,01

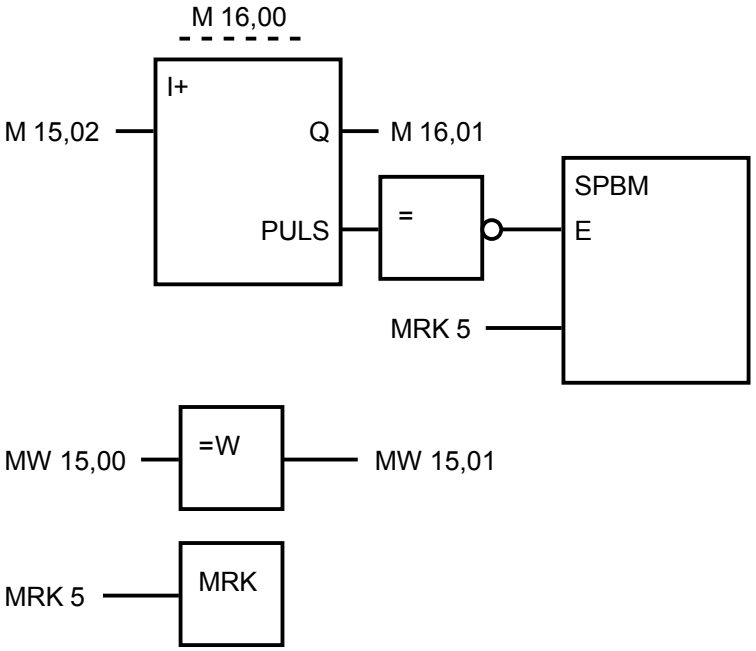

Parametrization for several MODBUS tasks: Use **one** separate CE for M, MW, MD and perform the control from step chains interlocked to each other.

A detailed example program can be requested from our helpline.

4.11 Description of ARCNET

4.11.1 Basic unit with integrated ARCNET coupler

07 KT 94 R161 Order No. GJR5 2521 00 R0161

4.11.2 Technical data

Connector X4		BNC
ARCNET interface		for coaxial cable
Recommended system cable		coaxial cable Type RG-62/U (char. impedance 93 Ω)
Cable length		305 m in case of ARCNET bus with 8 stations. For further details see SMC TECHNICAL NOTE TN7-1.
Signalling	green LED (BS)	operating condition ”controller active”, i.e. the PLC performs writing or reading operations
	green LED (TX)	operating condition ”transmit active”, i.e. the PLC is sending on the ARCNET
Electrical isolation		versus power supply voltage, inputs and outputs, versus the interfaces COM1/COM2

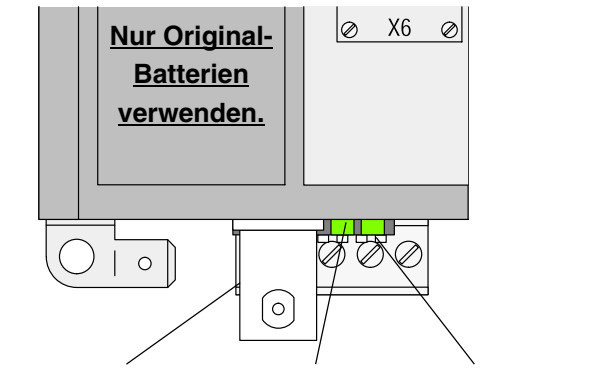

Fig. 4-60: ARCNET BNC connection

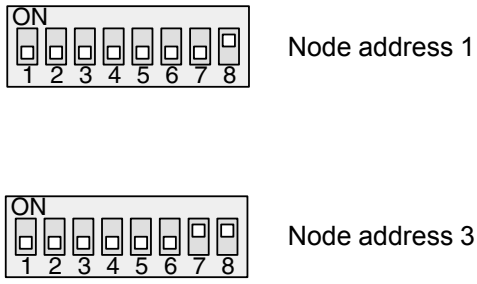

Fig. 4-61: Setting of the ARCNET node number (station address) at the basic unit

4.9.3 ARCNET short description

- The ARCNET coupler is integrated in the housing of the basic unit. The DIL switch for setting the ARCNET address is accessible from the outside of the housing. The ARCNET coupler is powered by the internal 24 V DC supply voltage.
- The function blocks AINIT, ASEND, ASEND+, AREC and APOLL are available for the ARCNET coupling.
- The data packages are read from the ARCNET controller interrupt-controlled. The interrupt routine stores the data packages in the storage buffer. The APOLL block serves for the sending direction. It transfers data packages from the storage buffer to the ARCNET controller for sending them off.
- The ARCNET coupler interface is designed as a bus with BNC connector for coaxial cable. The ARCNET bus is earthed inside the module via a capacitor. As an EMC measure and for protection against dangerous contact voltages, the bus has to be earthed directly at a central place.
- Using the simplest configuration, called Linear ARCNET, a coaxial cable (RG-62, 93 Ω) is laid from station to station and connected with T plugs at all stations. At both ends of the cable, terminating resistors with 93 Ω each have to be installed.

4.11.3 The ARCNET system (**A**ttached **R**esource **C**omputer **Net**work)

- ARCNET is a system for data transmission in local networks.
- The ARCNET protocol is based on the Token Passing principle.
- By passing an identifier (token) from station to station it is guaranteed, that only one station can start a data transmission (transmission without collisions).
- The order of sequence, in which the stations are accessed, is automatically adapted by the existing conditions in the network, i.e. that the network is reconfigured automatically each time a station is added to the network or switched off.

4.11.3.1 The networking configurations

Linear ARCNET

- In the Linear ARCNET configuration, the stations are connected to one another directly, i.e. without using any distribution units.
- Each station is connected to the network by using a T connector.
- Both cable ends must be terminated by termination resistors.
- A maximum of 8 stations can be connected to one Linear ARCNET.
- The maximum cable length of the network is 300 m.
- An additional segment can be connected at the end of the wired segment via an Active Hub (active distribution unit), see next page.

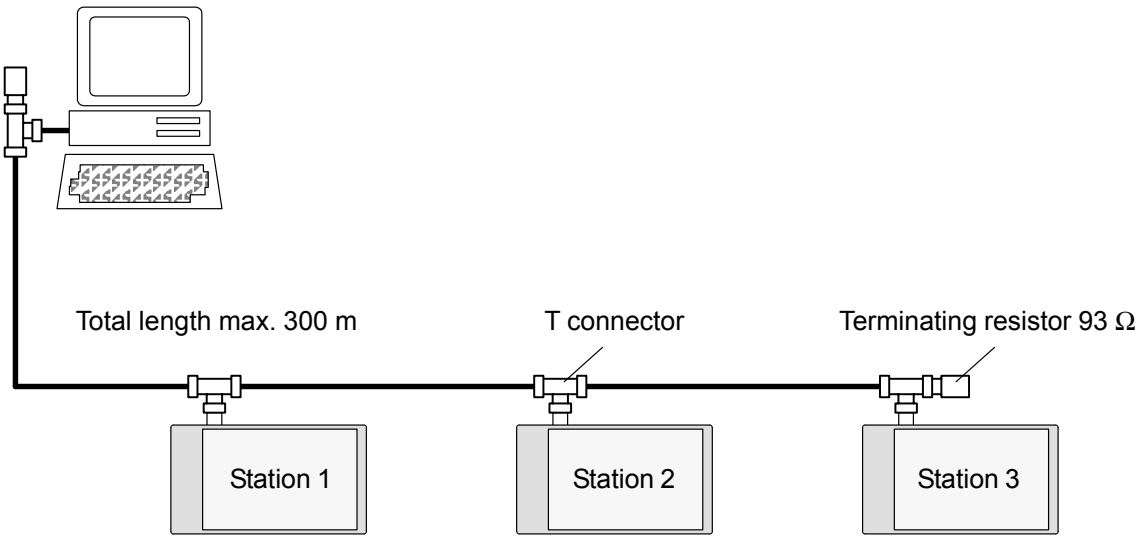

Fig. 4-62: Linear ARCNET

Linear ARCNET, expanded by active distribution units (Active Hubs)

- Active Hubs amplify the arriving signals. So they stabilize the network configuration and allow especially for high distances. The Active Hub decouples the station connectors from one another.

  Therefore, the entire network does not fail when one of the connections fails.
- The maximum length of the network is 6 km.
- A maximum of 255 stations can be used.

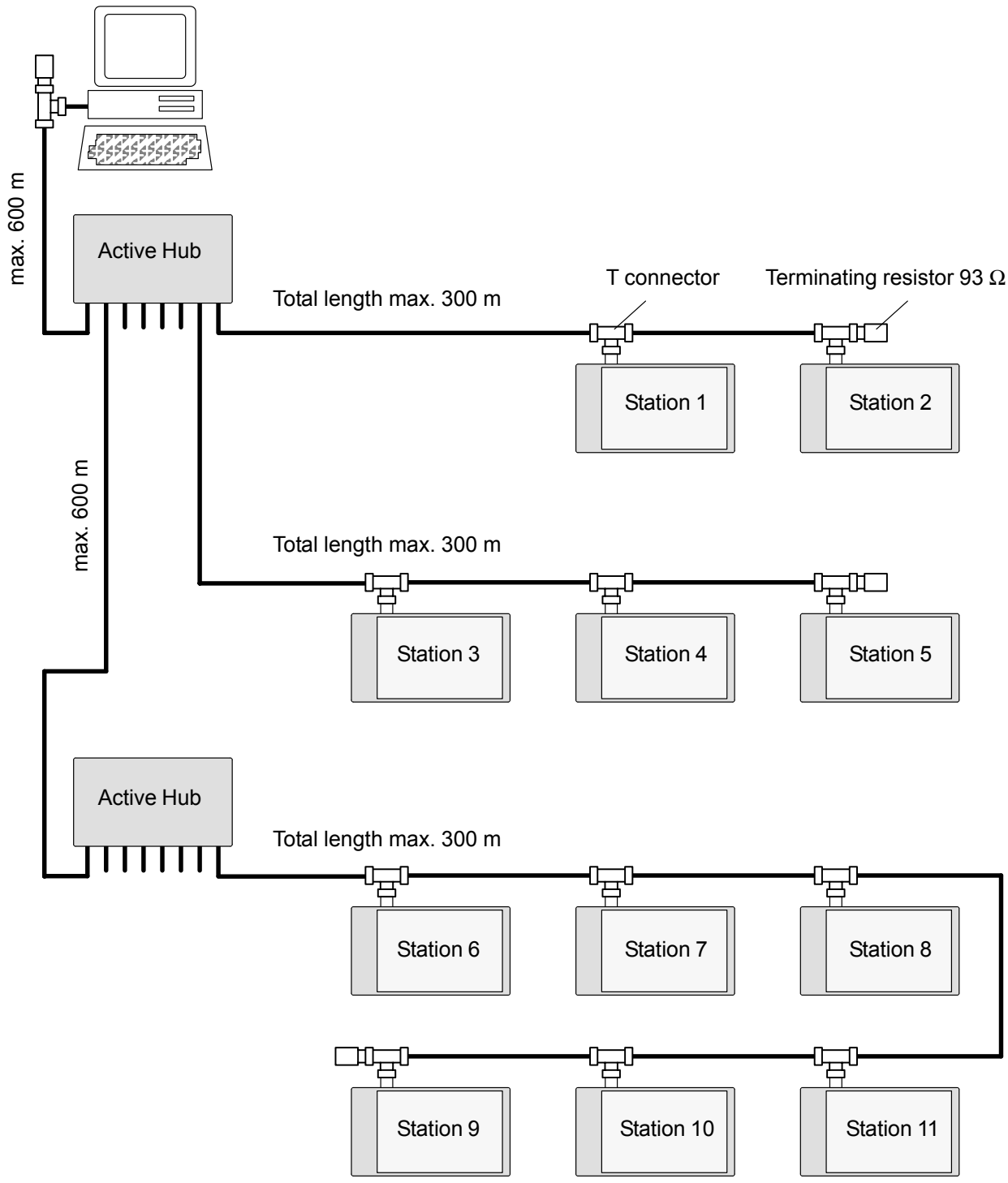

Fig. 4-63: Linear ARCNET, expanded by active distribution units (Active Hubs)

4.11.3.2 The features of the ARCNET system

- Data transmission rate 2.5 MBit/s
- Coaxial cable of type RG62/U, 93 Ω
- Coaxial plugs, suitable for the coaxial cable
- Maximum number of stations: 255

Maximum distances

- The maximum distance between two stations amounts to 6 km.
- The maximum distance between an Active Hub and an ARCNET station or between two Active Hubs amounts to 600 m.
- The maximum distance between a Passive Hub and an ARCNET station or between an Active Hub and a Passive Hub is 30 m. A Passive Hub works like a resistor network which carries out the cable termination at the stations.
- The maximum distance within a Linear ARCNET configuration is 300 m. A maximum of 8 stations can be connected.



ABB STOTZ-KONTAKT GmbH
Eppelheimer Straße 82 Postfach 101680
D-69123 Heidelberg D-69006 Heidelberg

Telephone +49 6221 701-0
Telefax +49 6221 701-1111
E-Mail desst.helpline@de.abb.com
Internet http://www.abb.de/stotz-kontakt

Appendix

Advant Controller 31

Intelligent Decentralized Automation System

Basic Unit 07 KT 94

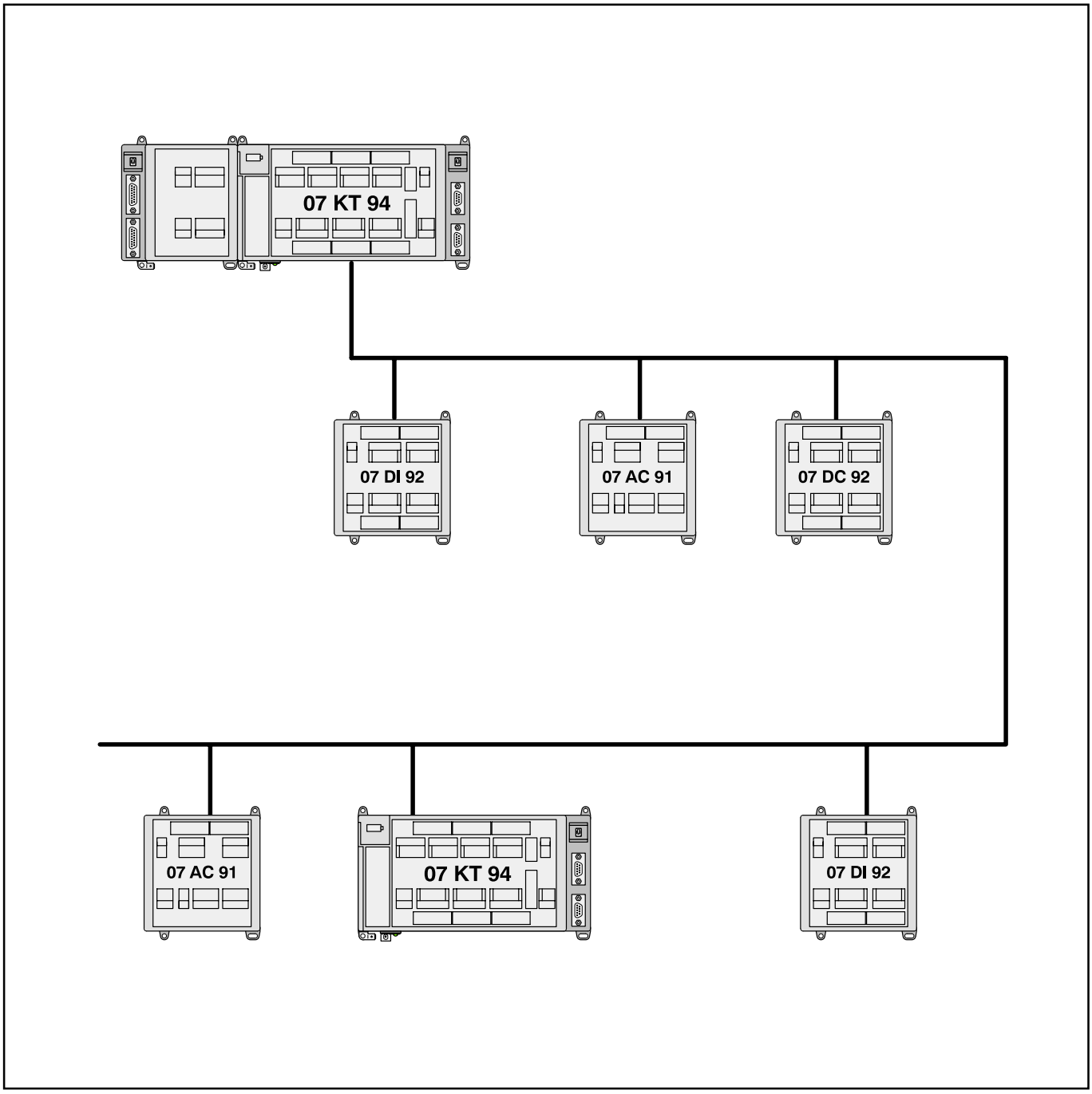

Table of Contents

Appendix

This documentation "Appendix" is applicable to the following basic units:

07 KT 94 all versions

This documentation is **not** applicable to the basic units:

07 KR 91 all versions
07 KT 92 all versions
07 KT 93 all versions

B1 Processing times B1-1

B1.1 Program processing time B1-1
B1.2 Set cycle time B1-2
B1.3 Reaction time with digital signals B1-2

B2 **Addressing with 07 KT 94 as bus master** B2-1

B2.1 Introduction / Structure examples with 07 KT 94 as bus master B2-1
B2.2 Recommended module addresses on the CS31 system bus with several remote modules and basic units connected as slaves B2-3
B2.3 Address settings for the modules B2-3
B2.4 07 KT 94 used as stand-alone basic unit B2-3
B2.5 07 KT 94 used as bus master basic unit B2-4
B2.6 Intelligent I/O remote modules (basic units) used as slaves on the CS31 system bus B2-4
B2.7 Special modules used as slaves on the CS31 system bus B2-7
B2.8 Complex structure examples including addresses B2-7
B2.9 Module examples (slaves connected to the CS31 system bus) B2-7

B3 I/O Configuration B3-1

B3.1 Purpose of the I/O configuration of I/O modules B3-1
B3.2 Performing and reading the I/O configuration B3-2

B4 Diagnosis B1-1

B4.1 Introduction B4-1
B4.2 Structure of the diagnosis B4-1
B4.3 Troubleshooting by means of LED displays on the basic unit B4-2
B4.4 Troubleshooting on the remote modules B4-4
B4.5 Acknowledgement of the error messages in the remote modules B4-5
B4.6 Example of an error message B4-5
B4.7 Error flags in the basic unit, error classification B4-6
B4.8 Acknowledgement of error messages in the basic unit B4-8
B4.9 Additional diagnosis functions B4-8
B4.10 Meaning of the contents of the error word flags B4-8
B4.11 Reaction of the bus master basic unit and the remote modules in case of errors B4-13

B5 Programming and test B5-1

B6 Man-machine communication B6-1

B7 Operands 07 KT 94 (variables and constants) B7-1

B7.1 Available variables and constants B7-1
B7.2 Direct constants B7-2
B7.3 Labels B7-2
B7.4 System constants B7-2
B7.5 System flags / diagnosis flags B7-3
B7.6 CS31 status word B7-3
B7.7 System constants / setting of operating modes B7-3

B1 Processing times

The most important times for the application of the basic unit 07 KT 94 with or without connected remote modules are:

- **The reaction time** is the time between a signal transition at the input terminal and the signal response at the output terminal.

  In case of digital signals, the reaction time consists of the input delay, the cycle time of the program processing and the bus transmission time, if the system is expanded by remote modules.

- The **cycle time** determines the time intervals, after which the processor restarts the execution of the user program.

  The cycle time has to be specified by the user. It should be greater than the program processing time of the user program plus the data transfer times and the related waiting times.

  The cycle time is also the time base for some time-controlled functions, such as for the PID controller.

- The **program processing time** is the net time for processing the user program.

B1.1 Program processing time

- **Binary instructions of the type:**

  !M /M &M =M
  !NM /NM &NM =NM
  Processing time for 1000 instructions: 0.75 ms

  !M /M &M =SM
  !NM /NM &NM =RM
  Processing time for 1000 instructions: 0.8 ms

- **Word instructions of the type:**

  !MW +MW –MW =MW
  !–MW –MW +MW =–MW
  Processing time for 1000 instructions: 1.75 ms

  !MW *MW :MW =MW
  !–MW *–MW :–MW =–MW
  Processing time for 1000 instructions: 2.25 ms

- **Mixed instructions:**

  – 65 % binary: !, /, &, =
  – 20 % word: !, +, –, =
  – 15 % word: !, *, :, =
  Processing time for 1000 instructions: 1.2 ms

- The processing times of all the function blocks are specified in the documentation of the 907 PC 331 programming software.

B1.2 Set cycle time

It is assumed that the processor always gets access in a moment with a *worst-case* condition.

The cycle time is stored in KD 00,00 and can be selected in 1-ms time steps. If the selected cycle time is too short, the processor will not be able to fulfill the tasks assigned to it every cycle. It will come in default then.

If this lack of time becomes too large over several cycles, the processor will abort the program execution and output an error (FK2).

Using some function blocks, such as the PID controller, the error-free execution depends on an exact timing sequence. Make sure that there is a large time reserve.

The correct setting of the cycle time should be checked by the following procedure:

– Loading the user program into the basic unit

– If the operating mode has been switched over from stand-alone basic unit to bus master basic unit: Power ON or menu item "Enable PLC mode" in the programming software

– Interrogation of the capacity utilization using the menu item of "Display PLC status"

– Changing the cycle time until the capacity utilization is below 80 %.

When setting the cycle time, the following values have to be kept in mind:

– Block copy time, time for copying the input signals to the operand memory:

  digital inputs (E):
  basic run time 28 µs + 3 µs per group of inputs (E) + 21 µs for E via the CS31 bus

  analog inputs (EW):
  basic run time 20...50 µs + 6 µs per group of EW

  2 interface interrupts: 2 * 50 µs

– Program processing time

– Block copy time, time for copying the output signals from the operand memory:

  digital outputs (A):
  Basic run time 33 µs + 5 µs per group of outputs (A) + 30 µs for A via the CS31 bus

  analog outputs (AW):
  basic run time 20...32 µs + 6 µs per group of AW

  2 interface interrupts: 2 * 50 µs

– If using the **settings** Master or Slave, it must be added a time of 36 µs...330 µs for each CS31 bus cycle (interrupt from the CS31 bus):

  Basic run time 36 µs + 8 µs per group of EW + 8 µs per group of AW + 30 µs for E + 40 µs for A

– Receive interrupts from ARCNET telegrams within the cycle time

B1.3 Reaction time with digital signals

direct inputs/outputs:

– Delay of the digital inputs (E), configurable 7 ms / 1 ms

– Cycle time of the I/O processor ca. 1 ms

– 2 * PLC cycle time (set by the user)

– Cycle time of the I/O processor ca. 1 ms

– Delay of the digital outputs (A), negligible

Inputs/outputs via the CS31 bus:

– Delay of the digital remote modules, mostly 8 ms

– Basic time CS31 bus (2 ms) + 2 * sum of the bus transmission times of the remote modules (for details about the bus transmission times of the remote modules see Volume 2, system data)

– Interrupt CS31 bus (see cycle time: 36 µs...330 µs)

– 2 * PLC cycle time (set by the user)

– Basic time CS31 bus (2 ms) + sum of the bus transmission times of the remote modules

– Interrupt CS31 bus (see cycle time: 36 µs...330 µs)

– Delay of the digital outputs (A), mostly < 1 ms

B2 Addressing with 07 KT 94 as bus master

B2.1 Introduction

Structure examples with 07 KT 94 as bus master

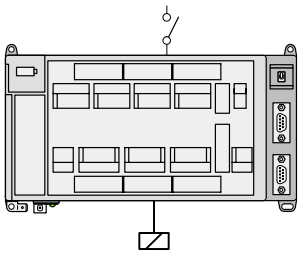

Example 1: 07 KT 94 as stand-alone PLC

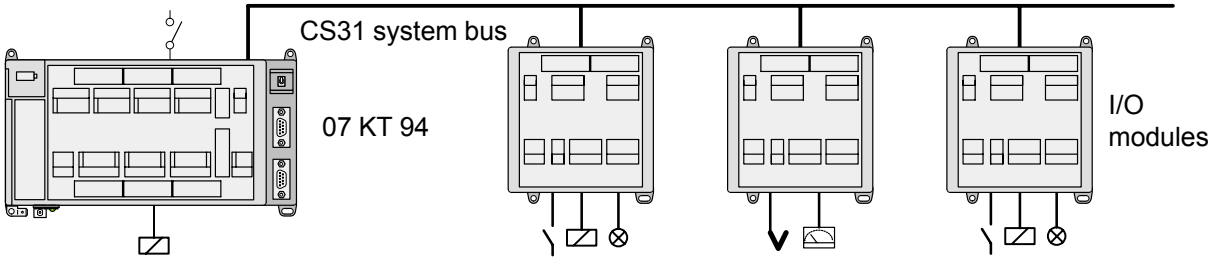

Example 2: 07 KT 94 as bus master on the CS31 system bus,
as remote modules only I/O modules are used

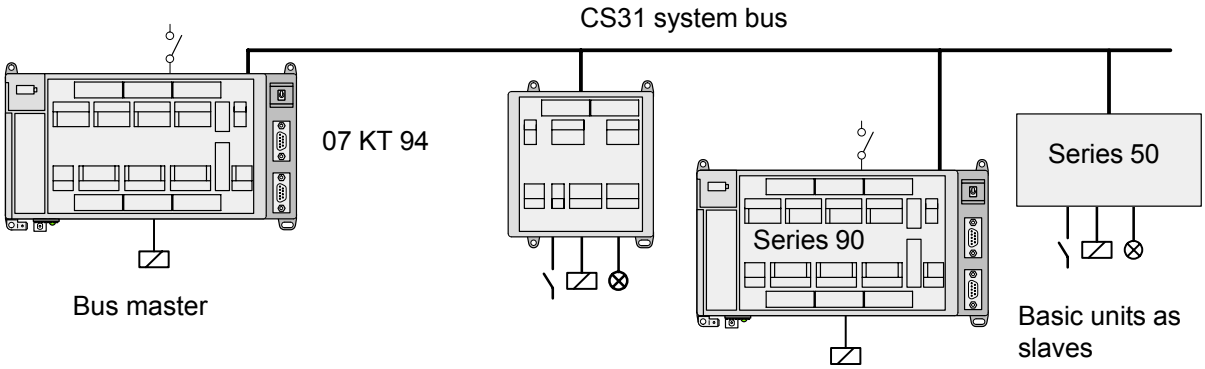

Example 3: 07 KT 94 as bus master and as slaves on the CS31 system bus,
basic units if the series 50 as slaves, I/O modules

Without regard to the address ranges, the following modules can be connected to a CS31 system bus:

- **max. 1 bus master**
- **max. 31 remote modules / slaves**

Further restrictions result from the address range of the basic units 07 KT 94:

- **max. 28 analog input modules**
- **max. 28 analog output modules**
- **max. 31 digital input modules**
- **max. 31 digital output modules**

There may be further restrictions according to the structure of the installation and the type of the remote modules. For the recommended addresses, see chapter B2.2

Structure of the input and output addresses on the remote modules

An address must be set for each module to enable the basic unit to correctly access the inputs and outputs.

As an example, the digital input module **07 DI 92** is introduced here.

The address setting is accomplished with the DIL switch located under the slide cover on the right side of the module housing. (Meaning of the 8 switches see below).

The bus master basic unit reads the input signals as operands. The complete address of an input signal has the following structure:

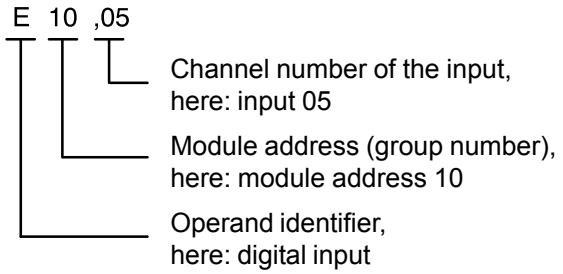

When using basic units 07 KR 91, 07 KT 92 to 07 KT 94 as bus master, the address assignments for the digital input channels apply which are shown in the right-hand table.

Basic units 07 KT 92, 07 KT 93, 07 KT 94

Terminal	Input	Terminal	Input
5	E n,00	30	E n+1,00
6	E n,01	31	E n+1,01
7	E n,02	32	E n+1,02
8	E n,03	33	E n+1,03
9	E n,04	34	E n+1,04
10	E n,05	35	E n+1,05
11	E n,06	36	E n+1,06
12	E n,07	37	E n+1,07
15	E n,08	40	E n+1,08
16	E n,09	41	E n+1,09
17	E n,10	42	E n+1,10
18	E n,11	43	E n+1,11
19	E n,12	44	E n+1,12
20	E n,13	45	E n+1,13
21	E n,14	46	E n+1,14
22	E n,15	47	E n+1,15

n: Module address, can be set with address DIL switch with switches 2...7.
Recommended module addresses for 07 KT 92/93/94 as bus master:
08, 10, 12....60 (even-numbered addresses)

The module occupies **two** addresses on the CS31 system bus for inputs.

Switches 1 and 8 of the address DIL switch must be set to OFF.

07 DI 92: Addresses of the 32 input channels

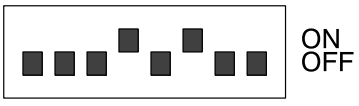

1 2 3 4 5 6 7 8

Switch OFF: (always OFF with modules having 32 channels)

Switch OFF: 0 · Bit significance 1 = 0
Switch ON: 1 · Bit significance 2 = 2
Switch OFF: 0 · Bit significance 4 = 0
Switch ON: 1 · Bit significance 8 = 8
Switch OFF: 0 · Bit significance 16 = 0
Switch OFF: 0 · Bit significance 32 = 0
+ -----

Module address (group number) = 10
===

On 07 DI 92, this switch is always OFF.

Example:

Setting of the module address (group number) on the digital input module 07 DI 92 (variable identifier E)

Note: Some of other modules may have a more or less different address setting, see the following chapters.

B2.2 Recommended module addresses on the CS31 system bus with several remote modules and basic units connected as slaves

The standard addressing has the purpose of
- simplifying and schematizing the setting of addresses on the CS31 system bus
- simplifying diagnosis and troubleshooting.

The standard addressing makes sure that there will be no address overlappings even for modules with a bigger amount of data.

Recommendation:

- Assign a specific module address for each module / each slave basic unit, that means the giving up the possibility of double assignment of module addresses by digital and analog modules.
- Module addresses for digital remote modules and basic units: 8, 10, ..., 58, 60 (all even numbers), see also chapter B2.6 "Intelligent I/O remote modules (basic units) used as slaves on the CS31 system bus"
- Module addresses for analog remote modules: 0...5 and 8...15

B2.3 Address settings for the modules

Setting the address switch for digital modules

When using the basic unit 07 KT 94, the possible range of digital module addresses is:

0...61

The function of the address switches is as follows:

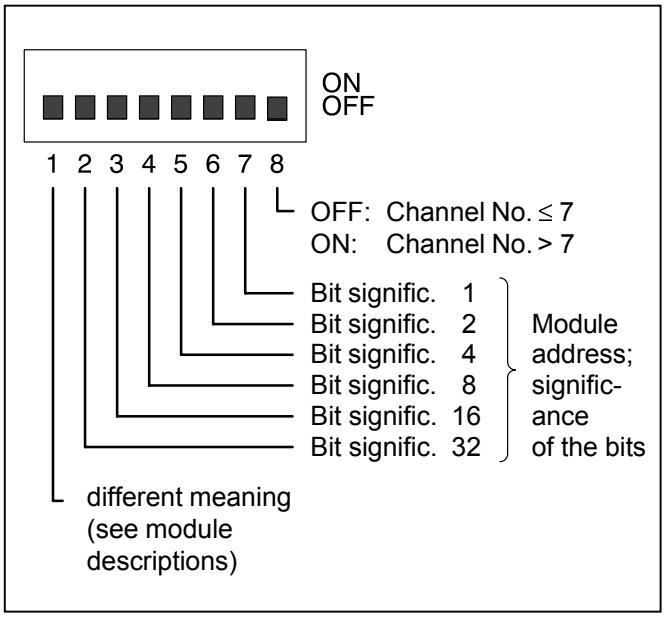

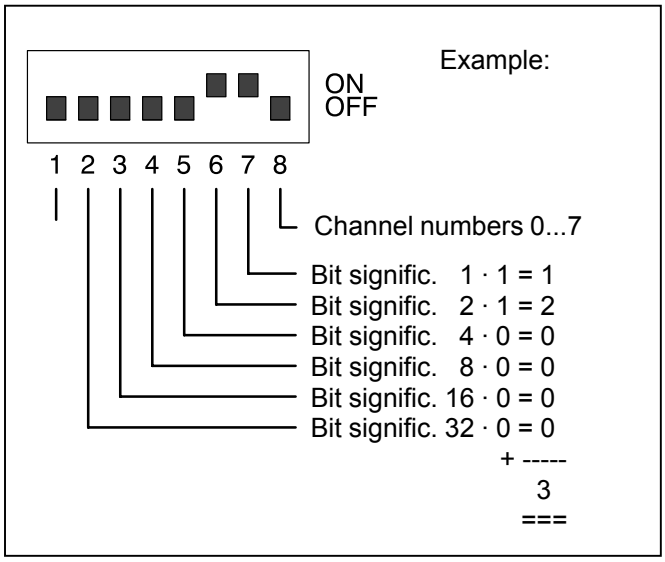

Setting the address switch for analog modules

When using the basic units 07 KT 94, the possible range of analog module addresses is:

0...5 and 8...15

The analog representation in the 07 KT 94 is fixed. The AC31 analog modules generate appropriate values. For more details concerning analog representation see "General information for the use of analog modules" in Volume 2, chapter "Analog modules".

The function of the address switches is as follows:

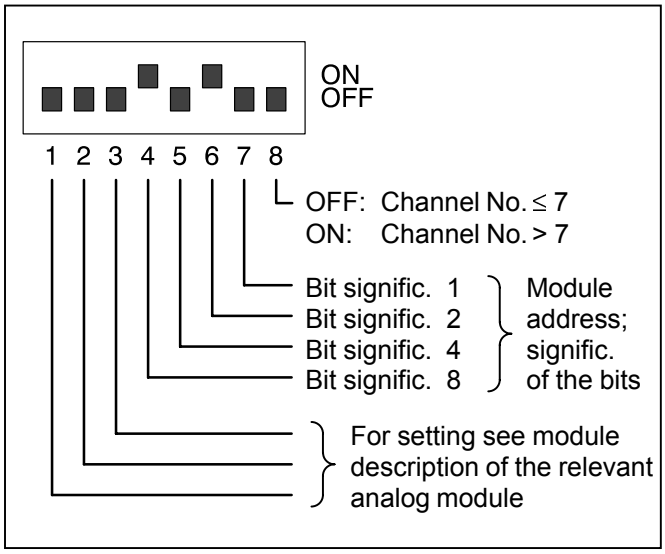

B2.4 07 KT 94 as stand-alone basic unit

If the basic unit 07 KT 94 is to be used without the CS31 system bus connected, perform the following setting when programming in the user program:

System constant KW 00,00 = -2

This value is the factory setting.

B2.5 07 KT 94 used as bus master basic units

If remote modules (slaves) are connected to the basic unit 07 KT 94 via the CS31 system bus, proceed as follows:

1. Change the system constant: KW 00,00 = –1
2. Save the PLC program in the Flash EPROM
3. Activate the new PLC mode by:
   - Calling the menu item ”Enable PLC mode” in the ABB programming and test system or
   - entering the command WARM <CR> in terminal mode

   or
   - power ON or
   - cold start or
   - warm start.

B2.6 Intelligent I/O remote modules (basic units) as slaves on the CS31 system bus

The basic units 07 KT 94, 07 KR 51and 07 KT 51 can also be used as slaves at the CS31 system bus.

The basic units 07 KT 94, 07 KR 51 / 07 KT 51 may be used both in the binary range and in the word range.

The address can be set to a value from 0 to 61 or from 100 to 115. The maximum permissible address depends on the size of the set transmit and receive range. The larger you choose the transmit or the receive range, the smaller is the maximum permissible address (see examples 1...3).

The slave basic unit can be used both in the binary range and in the word range of the CS31 system bus. If used in the word range, the sending or receiving data are located either on the channels 0...7 or 8...15, which is selected together with the address setting:

KW 00,00 = 0...5; 8...15 -> Channels 0...7

KW 00,00 = 100...105; 108...115 -> Channels 8...15

By adding of 100 to the address, the upper channel range of 8...15 is configured.

If you want to switch over to the ”slave mode”, proceed as follows:

1. Change the system constant: KW 00,00 = 0...61.
2. Save the PLC program in the EEPROM
3. Activate the new PLC mode by:
   - Calling the menu item ”Enable PLC mode” in the ABB programming and test system or
   - entering the command WARM <CR> in terminal mode or
   - power ON or
   - cold start or
   - warm start.

There is no direct access to the inputs and outputs of the slave basic unit via the CS31 system bus. The communication between master and slave is performed using input and output operands.

All the master data are consistently transferred to the slave, and all the slave data are consistently transferred to the master.

The slave basic unit can be used both in the binary range and in the word range of the CS31 system bus. Using the two system constants KW 00,10 and KW 00,11, the sending and receiving range of the slave can be adapted to the application-specific requirements (see also chapter "System constants").

You can set:

- The size of the transmit and receive ranges and
- the mode of employment of the slave (in the binary or the word range).

Default condition:

If the basic units 07 KT 94 / 07 KR 51 / 07 KT 51 are switched over to the ”slave mode”, they behave like digital input and output modules with 32 inputs and 32 outputs.

This means that the default setting of the transmit and receive ranges is within the binary range of the master. Their size is 32 bits each (4 bytes).

Example 1:

Default configuration of the slave (digital range):

KW 00,10 = 0: Slave transmit range: 4 bytes
(4 bytes * 8 channels = 32 digital A)

KW 00,11 = 0: Slave receiving range: 4 bytes
(4 bytes * 8 channels = 32 digital E)

Note:
The default configuration is the same as the configuration KW 00,10 = KW 00,11 = 4

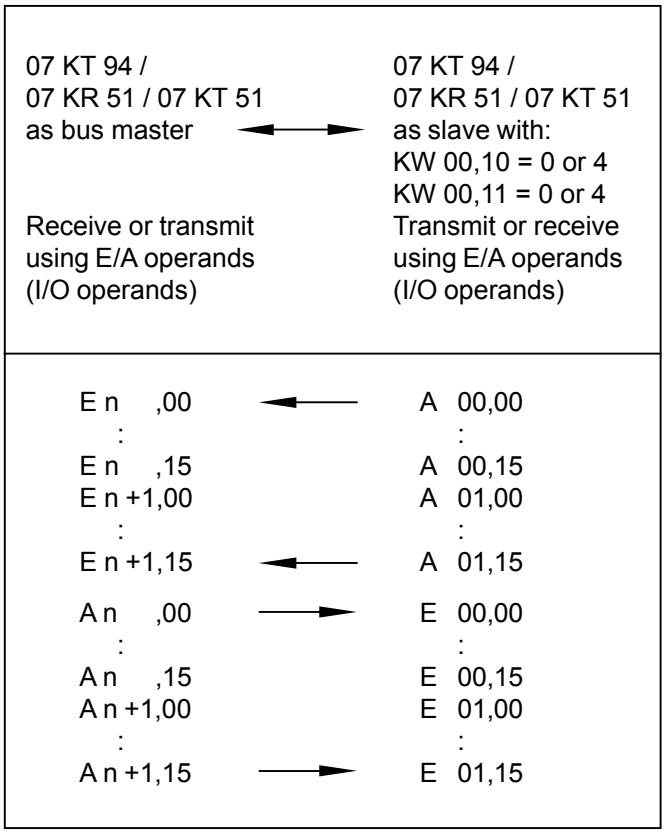

n: Module address of the slave basic unit,
for this example: 0 ≤ n ≤ 60)

For the slave address of n = 12 the following applies, for example:
The output signal A 00,00 of the 07 KT 94 used as slave is the input signal E 12,00 for the 07 KT 94 used as bus master.

Example 2:

Configuration of the slaves for the digital range:

KW 00,10 = 15: Slave transmit range: 15 bytes
(15 bytes * 8 channels = 120 digital A)

KW 00,11 = 06: Slave receiving range: 6 bytes
(6 bytes * 8 channels = 48 digital E)

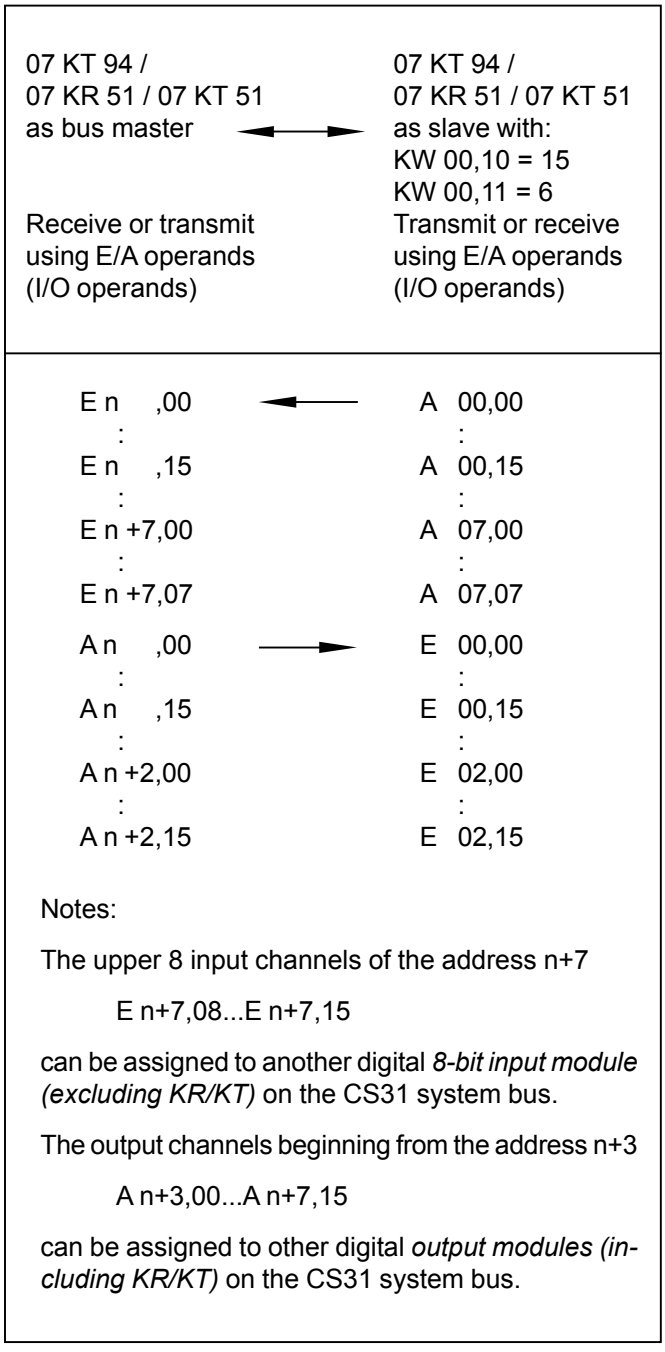

Notes:

The upper 8 input channels of the address n+7

E n+7,08...E n+7,15

can be assigned to another digital *8-bit input module (excluding KR/KT)* on the CS31 system bus.

The output channels beginning from the address n+3

A n+3,00...A n+7,15

can be assigned to other digital *output modules (including KR/KT)* on the CS31 system bus.

n: Module address of the slave basic unit,
for this example: 0 ≤ n ≤ 54)

For the slave address n = 12 the following applies, for example:
The output signal A 00,00 of the 07 KT 94 used as slave is the input signal E 12,00 for the 07 KT 94 used as bus master.

Example 3:

Configuration of the slaves for the word range:

KW 00,10 = 101: Slave transmit range: 1 word
(1 word = 1 word output)

KW 00,11 = 108: Slave receive range: 8 words
(8 words = 8 word inputs)

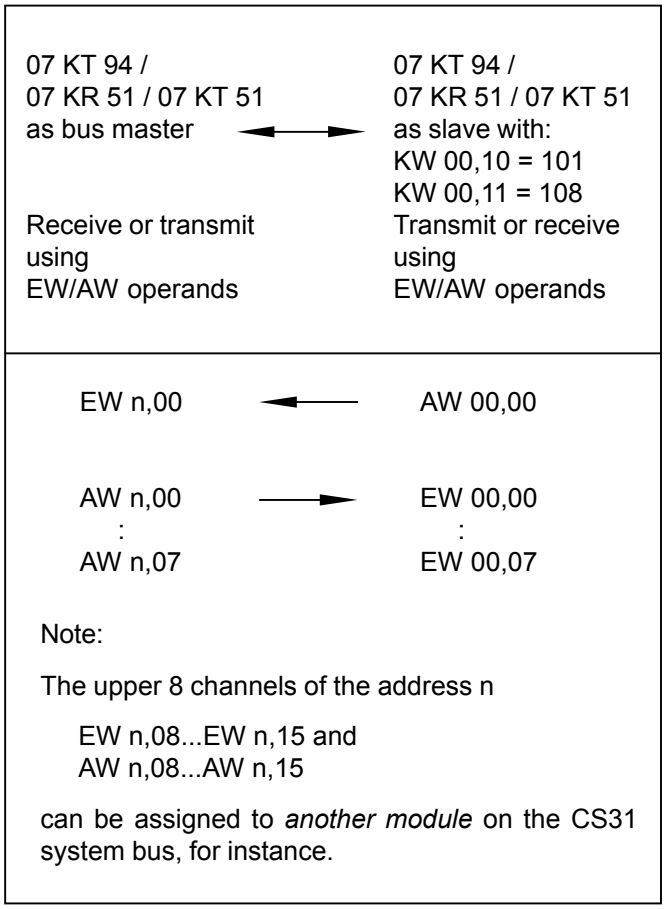

n: Module address of the slave basic unit
for this example: $0 \leq n \leq 5$ or $8 \leq n \leq 15$)

For the slave address n = 4 the following applies, for example:
The output signal AW 00,00 of the 07 KT 94 used as slave is the input signal EW 04,00 for the 07 KT 94 used as bus master.

Example 4:

Configuration of the slave for the word range:

KW 00,10 = 101: Slave transmit range: 1 Wort
(1 word = 1 word output)

KW 00,11 = 108: Slave receive range: 8 words
(8 words = 8 word inputs)

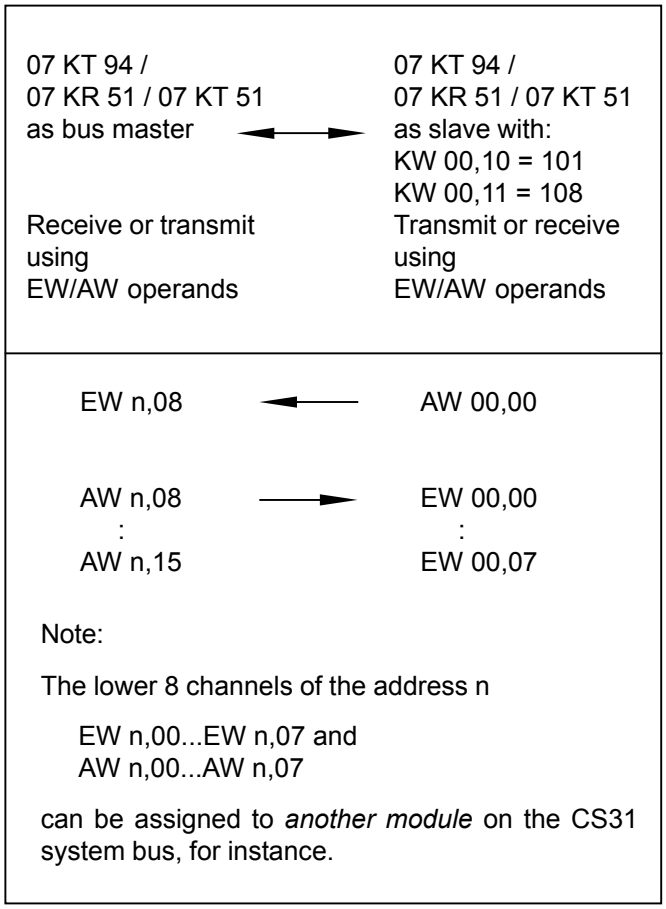

n: Module address of the slave basic unit
for this example:
$100 \leq n \leq 105$ or $108 \leq n \leq 115$)

For the slave address n = 104 the following applies, for example:
The output signal AW 00,00 of the 07 KT 94 used as slave is the input signal EW 04,08 for the 07 KT 94 used as bus master.

B2.7 Special modules used as slaves on the CS31 system bus

- **Festo valve island / installation island**

The Festo valve island and the Festo installation island behave on the CS31 system bus like digital input and output modules. For the scope of assigned data, please see the Festo documentation.

B2.8 Complex structure examples including addresses

- **Categorization of the modules with respect to the I/O terminals**

There are the following two main module types:

– Digital modules. These modules are controlled by means of digital I/O operands (E or A, respectively). The basic units 07 KT 94, 07 KR 51 and 07 KT 51 belong to them, too, if they are used as slaves.

– Analog modules. These modules are controlled by means of word I/O operands (EW or AW, respectively). The basic unit 07 KT 94 belong to them as well as the high-speed counter ICSF 08 D1, which receives its preset data as word data, for example.

The following table contains an overview of the module types. These designations will be used in example 6.

Please note that the configurable digital modules 07 DC 91 and 07 DC 92 behave differently according to the performed setting.

B2.9 Module examples (slaves connected to the CS31 system bus)

Module types, with regard to the I/O terminals	Module example
Digital output modules with 32 outputs	07 DC 92 with switch 1 set to ON
Digital modules with 16 inputs and 16 outputs	07 DC 91 with switch 1 set to ON
Digital modules with 32 inputs and 32 outputs	07 DC 92 with switch 1 set to OFF
Digital modules with 120 signals from and 120 signals to the CS31 system bus	07 KT 94 as slave 07 KR 51 as slave 07 KT 51 as slave
Analog input modules with 8 inputs	07 AI 91
Analog output modules with 8 outputs	07 AC 91 configured as output module
Analog modules (word modules) with up to 8 inputs and 8 outputs	07 KT 94, 07 KR 51, 07 KT 51, 07 AC 91

Examples for the assignment of module addresses,
Example 5

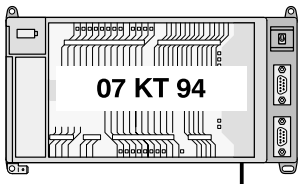

CS31 system bus

07 KT 94

E 62,00
:
E 62,15
E 63,00
:
E 63,15
A 62,00
:
A 62,15
A 63,00
:
A 63,07
EW 06,00
:
EW 06,07
AW 06,00
:
AW 06,03

Addresses of the inputs and outputs on the bus master basic units

Bus master basic unit

Address switch (DIL switch) on the module	Remote module	Address in the program of the master CPU
ON 1 2 3 4 5 6 7 8 08	07 DI 92 32 digital inputs	E 08,00 1st digital input : E 08,15 : E 09,00 : E 09,15 32nd digital input
ON 1 2 3 4 5 6 7 8 11 ≤ 7	07 AI 91 8 analog inputs	EW 11,00 1st analog input EW 11,01 2nd analog input : EW 11,07 8th analog input

Remote modules (slaves)

Example 6

Address setting in the master: KW 0,0 = -1

07 KT 94

E 62,00...E 62,15
E 63,00...E 63,15
A 62,00...A 62,15
A 63,00...A 63,07
EW 6,00...EW 6,07
AW 6,00...AW 6,03

inputs/outputs on the basic unit

Address switch on remote module	Remote module		Address in the program of the master CPU	Remarks
				- max. 31 slaves on the CS31 bus
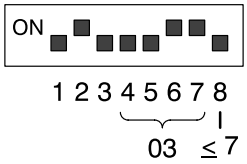	07 AI 91 8 inputs analog	E0 : E7	EW 03,00 : EW 03,07	- Permissible range of module addresses for analog modules: 0...5 and 8...15
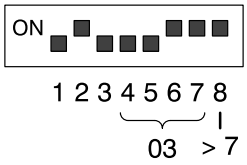	07 AI 91 8 inputs analog	E0 : E7	EW 03,08 : EW 03,15	- 2 analog input modules with 8 channels each can be assigned to one address (16 channels together)
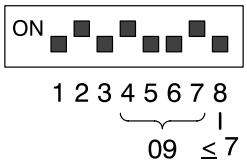	07 AC 91 8 outputs analog 8 outputs analog	A0 : A7 E0 : E7	AW 09,00 : AW 09,07 EW 09,00 : EW 09,07	- The same address (as for the analog input modules) may also be used for the connection of analog output modules (as shown to the left).
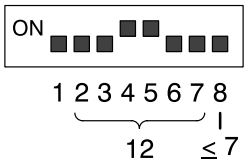	07 DI 92 32 inputs digital	E00 : E31	E 12,00 : E 12,15 E 13,00 : E 13,15	- Permissible range of module addresses for digital modules: 0...61, recommendation: 6...60 - The following might be done, but does not bring you any advantage: • using the same addresses for digital modules as for analog modules • collecting input and output modules under one address
07 KT 94: KW 0,0 = 4				- Slave KR/KT with 120 E and/or 120 A occupies the set **and** the following 7 addresses (only half of the 7th, though). For address 4 of the example: - Next free address for KT: Bit range: 12, word range: 5 - Max. settable KT address: Bit range: 54, word range: 5

up to 120 digital inputs and
up to 120 digital outputs
or
up to 8 word inputs and
up to 8 word outputs

KR/KT in the digital range:
E 04,00...E 11,07
A 04,00...A 11,07
or
KR/KT in the word range:
EW 04,00...EW 04,07
AW 04,00...AW 04,07

Example 7

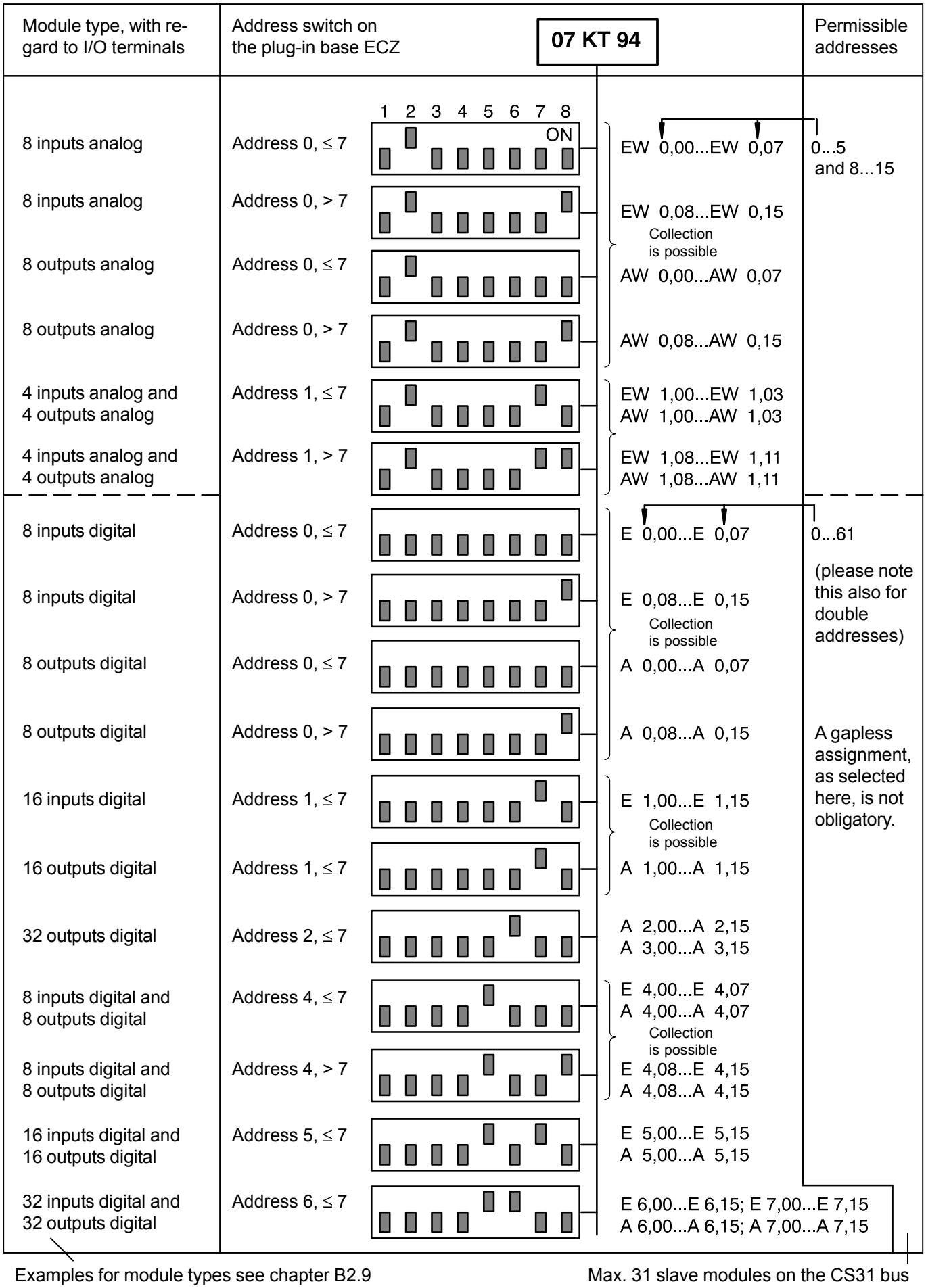
Module type, with regard to I/O terminals
Address switch on the plug-in base ECZ
07 KT 94
Permissible addresses
1 2 3 4 5 6 7 8
ON
8 inputs analog
Address 0, ≤ 7
EW 0,00...EW 0,07
0...5 and 8...15
8 inputs analog
Address 0, > 7
EW 0,08...EW 0,15
Collection is possible
8 outputs analog
Address 0, ≤ 7
AW 0,00...AW 0,07
8 outputs analog
Address 0, > 7
AW 0,08...AW 0,15
4 inputs analog and 4 outputs analog
Address 1, ≤ 7
EW 1,00...EW 1,03
AW 1,00...AW 1,03
4 inputs analog and 4 outputs analog
Address 1, > 7
EW 1,08...EW 1,11
AW 1,08...AW 1,11
8 inputs digital
Address 0, ≤ 7
E 0,00...E 0,07
0...61
(please note this also for double addresses)
8 inputs digital
Address 0, > 7
E 0,08...E 0,15
Collection is possible
8 outputs digital
Address 0, ≤ 7
A 0,00...A 0,07
8 outputs digital
Address 0, > 7
A 0,08...A 0,15
A gapless assignment, as selected here, is not obligatory.
16 inputs digital
Address 1, ≤ 7
E 1,00...E 1,15
Collection is possible
16 outputs digital
Address 1, ≤ 7
A 1,00...A 1,15
32 outputs digital
Address 2, ≤ 7
A 2,00...A 2,15
A 3,00...A 3,15
8 inputs digital and 8 outputs digital
Address 4, ≤ 7
E 4,00...E 4,07
A 4,00...A 4,07
Collection is possible
8 inputs digital and 8 outputs digital
Address 4, > 7
E 4,08...E 4,15
A 4,08...A 4,15
16 inputs digital and 16 outputs digital
Address 5, ≤ 7
E 5,00...E 5,15
A 5,00...A 5,15
32 inputs digital and 32 outputs digital
Address 6, ≤ 7
E 6,00...E 6,15; E 7,00...E 7,15
A 6,00...A 6,15; A 7,00...A 7,15
Examples for module types see chapter B2.9
Max. 31 slave modules on the CS31 bus

B3 I/O configuration

B3.1 Purpose of the I/O configuration of I/O modules

Dependent on the type of I/O modules the following can be configured:

- in case of digital modules with combined I/O channels, these channels can also be defined as inputs only or outputs only,
- in case of analog modules, measuring or output ranges which differ from the factory setting.

Switching over of inputs and outputs, switching on the diagnosis functions and changing the measuring and output ranges are performed as follows, depending on the module type:

- Performing the I/O configuration via the CS31 system bus, either by means of the user program of the bus master basic unit or by means of a terminal,
- setting of switches on the remote module
- external wiring on the input/output module terminals.

In some cases, there is a relation between the settings made on the remote module and the information and diagnosis messages which can be interrogated at the remote module or via the CS31 system bus. This relation will be explained in the following chapters.

There is no need for you to perform an I/O configuration via the CS31 system bus if the factory setting is sufficient. Once an I/O configuration has been performed, it will remain stored in the corresponding I/O module until it is changed again. Even in case of power OFF it will not be deleted.

B3.2 Performing and reading the I/O configuration

There are the following possibilities for system structures when using 07 KT 94 as bus master:

- Performing and reading the I/O configuration via the user program of the bus master basic unit 07 KT 94
- Performing and reading the I/O configuration by means of the terminal or
- Reading the I/O configuration from the remote modules.

Performing and reading the I/O configuration via the user program

The function block CS31CO is available for the I/O configuration of the modules. This function block is part of the programming software 907 PC 331 and is described in the corresponding documentation.

Performing and reading the I/O configuration by means of a terminal

This method is based on the fact that the basic unit 07 KT 94 use a dialogue language at their programming interface which allows the I/O configuration to be performed and interrogated by means of simple protocols; see volume 7.3, chapter 3, ”MAIL command”.

07 KT 94 is generally equipped with the special function for I/O configuration.

The following devices can be used as terminals:

- A commercially available terminal equipped with an EIA-232 interface, such as VT100.
- A PC equipped with the programming software 907 PC 331. All the interface data are correctly set under the main menu item of ”PLC communication 2”, subitem ”Terminal emulation”.

Reading I/O configuration and diagnosis data at the remote module

Reading the I/O configuration and the diagnosis data for an I/O terminal of a remote module will be shown in the following for the device ICSC 08 L1 as an example. The procedure is the same for all remote modules, only the type and the amount of the diagnosis information differ. For reading the information, the test button (4) and the LED displays (1) of the module have to be used.

When the test button is pressed for the first time, channel E/A0 (input/output 0) is selected: LED 0 flashes. After releasing the button, the diagnosis data of this channel are shown by the yellow LEDs 0 to 7 for approx. 3 seconds.

The LEDs have the following meaning:

0 UE = Unit error

1 BE = Bus error

2 not used

3 CI/CO = Cut wire of inputs/outputs

4 OL = Overload

5 SC = Short circuit

6 Configuration as output

7 Configuration as input

If the LEDs 6 and 7 light up at the same time, the channel is configured as a combined input/output.

The meaning of the LEDs (2) is also printed onto the front panel of the module.

The operation is repeated for the other channels each time the test button is pressed and released.

After the last channel E/A7 (input/output 7) has been scanned, pressing the test button again causes a lamp test (LED test) to be performed. All the 8 LEDs should light up. After the button has been released, the LEDs will show the setting of the DIL switch on the plug-in base for approx. 5 seconds. LED 0 shows the position of switch No. 1 (LEDs 0...7 are assigned to the switches No. 1...8).

All error messages are stored in the module and can only be deleted by pressing the test button for 10 seconds or by power OFF/ON.

B4 Diagnosis

B4.1 Introduction

The diagnosis system of the 07 KR 91 and 07 KT 9x is designed to ensure a quick and efficient troubleshooting. For this purpose, it is classified:

- "vertically" in diagnosis, error flags, reactions, LED displays and acknowledgment, see chapter B4.7. There are interrelations between the bus master basic unit and the remote modules. The remote unit reads the diagnosis data which the remote modules have found out. An acknowledgment in the basic unit also causes the stored error messages in the remote modules to be deleted.
- "horizontally" in 4 error classes, in correspondence with the severity of the error, see chapter B4.7.

This concept is based on a system structure consisting of a bus master basic unit and several remote modules, and remote processors as well. The diagnosis system detects the following errors:

- Errors in the bus master basic unit
- Errors on the CS31 system bus
- Errors in the remote modules
- Errors in the wiring of the remote modules on the process side

The troubleshooting is performed as follows:

- The LEDs on the central unit 07 KR 91 and 07 KT 9x give first hints, see chapter B4.3. The errors detected by the remote modules are also displayed here.
- If these hints are not sufficient, the error flags have to be read out. For the meaning of the error flags, see chapters B4.7 and B4.10.
- The status register EW 07,15 in the basic unit supplies additional information to be used for the diagnosis, see chapter B4.9.
- The remote modules indicate errors occurring in their area. Detailed information can be obtained by pressing the test key on the modules, see chapter B4.4.

B4.2 Structure of the diagnosis

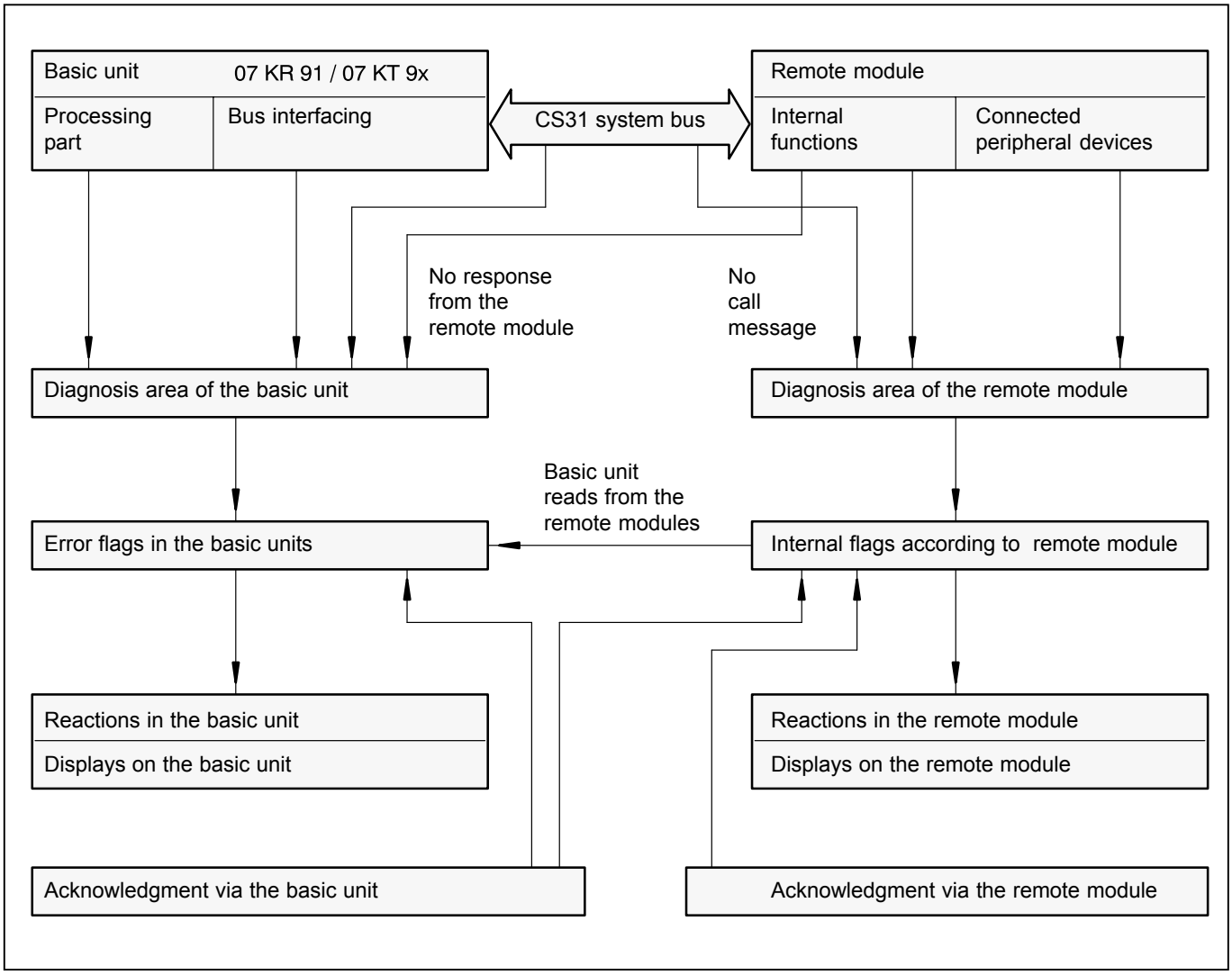

B4.3 Troubleshooting by means of LED displays on the basic unit

The LED displays on the front panel of the basic unit supply initial information on the errors which occurred:

- BA = CS31 bus processor active
- BE = Bus Error (error on the CS31 system bus)
- RE = Remote Unit Error (error in/on a remote module)
- SE = Serial Unit Error (error in the CS31 bus interfacing of the central unit)
- RUN = User program is running (no error)
- FK1 = Error class 1 (fatal error)
- FK2 = Error class 2 (serious error)
- FK3 = Error class 3 (light error)
- Supply = Supply voltage available
- Battery = Battery is effective
- Ovl = Overload/short circuit on at least one direct digital output of the basic unit 07 KT 94

If no LED lights up, the central unit has not found any error. Exception: LED Battery (battery is missing); the battery is only necessary for certain applications.

LEDs for CS31 system bus and bus interfacing

LED	BA BE RE SE		
CPU	gn rd rd rd	Meaning	Remedy
Stand-alone CPU, master CPU or slave CPU	✸ ○ ○ ○	Everything ok.	- -
	○ ⋇ ⋇ ⋇	A fatal error occurred. The watchdog switched off the CS31 system bus. All outputs are OFF.	• Power OFF/ON. If unsuccessful, device is defective. • Evaluate the error flags.
	✸ ○ ○ ✸	Dual-port RAM defective.	• Power OFF/ON. If unsuccessful, device is defective. • Evaluate the error flags.
	○ ✸ ✸ ✸	Initialization phase after power ON or after cold start.	- -
Master CPU	✸ ✸ ○ ○	Master CPU does not find any remote modules on the CS31 system bus after power ON or after cold start.	• Install remote modules. • Check the CS31 bus line. • Check the supply voltage of the remote modules. • Evaluate the error flags.
	✸ ○ ✸ ○	Error message from a remote module	• Evaluate the error flags. • Check the remote modules.
	✸ ✸ ✸ ○	1 remote module can suddenly not be controlled by the master CPU any more.	• Evaluate the error flags. • Check the supply voltage of the remote modules. • Check the CS31 bus line. • Check the remote modules.
	✸ ✸ ○ ○	There are at least 3 remote modules on the CS31 system bus. 2 remote modules can suddenly not be controlled by the master CPU anymore.	• Evaluate the error flags. • Check the supply voltage of the remote modules. • Check the CS31 bus line. • Check the remote modules.
	✸ ✸ ✸ ✸	There are at least 2 remote modules on the CS31 system bus. Suddenly no remote module can be controlled by the master CPU anymore.	• Evaluate the error flags. • Check the supply voltage of the remote modules. • Check the CS31 bus line. • Check the remote modules.
Slave CPU	✸ ○ ❖ ○	CS31 system bus does not work.	• Check the CS31 bus line. • Check the master CPU.

○ = LED off, ✸ = LED on, ❖ = LED flashes, ⋇ = LED on or off, gn = green, rd = red

LEDs for user program and error display

LED	RUN	FK1	FK2	FK3		
CPU	gn	rd	rd	rd	Meaning	Remedy
Stand-alone CPU, master CPU or slave CPU	✸	○	○	○	User program is running.	- -
	✸	○	○	✸	User program is running, but a light error occurred.	• Evaluate error flags and eliminate the error.
	○	○	○	○	User program does not run.	• Start the user program.
	○	○	○	✸	A light error occurred which caused the user program to be aborted automatically because – the system constant KW 0,7 is not equal to 0, – the "Abort" block is configured.	• Evaluate error flags and eliminate the error.
	○	○	✸	○	A serious error occurred which caused the user program to be aborted automatically.	• Evaluate error flags and eliminate the error, if possible.
	○	✸	○	○	A fatal error occurred. The user program cannot be started.	• Evaluate error flags. • Power OFF/ON. If unsuccessful, device is defective.
	○	○	✸	✸	A light and a serious error occurred.	• Evaluate error flags and eliminate the error, if possible.
	⋇	❖	⋇	⋇	Power-fail	• Power OFF/ON.
	✸	✸	✸	✸	Initialization phase, power ON, cold start	- -
○ = LED off, ✸ = LED on, ❖ = LED flashes, ⋇ = LED on or off, gn = green, rd = red						

LEDs for supply voltage and battery

LED	Supply	Battery		
CPU	gn	rd	Meaning	Remedy
Stand-alone CPU, master CPU or slave CPU	✸	○	Supply voltage available **and** battery is effective.	- -
	✸	✸	Supply voltage available and battery is **not** effective.	- -
	○	○	Supply voltage is not available.	• Switch power ON. • Check the supply voltage.
○ = LED off, ✸ = LED on, ❖ = LED flashes, ⋇ = LED on or off, gn = green, rd = red				

LEDs for overload/short-circuit on at least one direct digital output

LED	Ovl		
CPU	rd	Meaning	Remedy
Stand alone CPU, master CPU or slave CPU	✸	Overload/short-circuit on at least one of the direct digital outputs A 62,00...A 62,07 (A 62,15).	• Eliminate overload/short-circuit.
	○	No overload or short-circuit	- -
○ = LED off, ✸ = LED on, ❖ = LED flashes, ⋇ = LED on or off, gn = green, rd = red			

B4.4 Troubleshooting on the remote modules

Diagnosis functions for the remote modules

The remote modules are equipped with a number of diagnosis functions. Some of these functions become active only if they have been set by means of the I/O configuration.

Diagnosis, displays and messages to the basic unit						
Diagnosis function according to the module a) always available b) if configured	UE	BE	OL	SC	CI	CO
Readable on the module by pressing the test button [1]) a) Diagnosis messages	UE	BE	OL	SC	CI	CO
Available for bus master user program, readable on the terminal a) cyclic transmission	–	–	OL	SC	CI	CO
Modul type						
ICSI 08 D1	•	•			•	
ICSI 16 D1	•	•			•	
ICSI 08 E1	•	•				
ICSI 16 E1	•	•				
ICSI 08 E4	•	•				
07 DI 92	•	•				
ICSO 08 R1	•	•				
ICSO 08 Y1	•	•	•	•		
ICSO 16 N1	•	•	•	•		
ICSK 20 F1	•	•				
ICSK 20 N1	•	•	•	•		
ICSC 08 L1	•	•	•	•	•	•
ICSC 16 L1	•	•	•	•	•	•
ICSF 08 D1	•	•				
ICDG 32 L1, 07 DC 91	•	•	•	•		
07 DC 92	•	•	•	•		
ICSE 08 A6	•	•				
ICSE 08 B5	•	•				
ICSA 08 B5						
ICSM 06 A6						
07 AI 91	•	•				
07 AC 91	•	•				
07 KR 91	•	•				
07 KT 92	•	•	•	•		
07 KT 93 / 07 KT 94	•	•	•	•		
07 KR 31	•	•				
07 KT 31	•	•	•	•		

Explanation:

- • Feature is completely available. Settings and errors can be interrogated from the involved channel.

(•) Feature is partly available, see module description.

[1]) Concerning the interrogation of settings and diagnosis data, see the module description and chapter B3.3 ”Reading I/O configuration and diagnosis data at the module”.

BE Bus Error = Bus malfunction, always monitored. The module does not receive a call from the bus master. This may have the following reasons:

– The CS31 system bus line is broken, short-circuited or wired with reversed polarity.

– The basic unit has not been set as buster master, see also system constant KW 00,00 in chapter B7.3.

CI Cut Wire of Inputs = Open circuit (monitoring) at inputs, if configured. Each input circuit to be monitored has to be equipped with a resistor of 20...30 kΩ, e.g. in parallel to the signalling contact.

CO Cut Wire of Outputs = Open circuit (monitoring) at outputs, if configured. Each output expects a minimum load of approx. 40 mA when an ON signal is output.

OL Overload (is always monitored).

SC Short-circuit (is always monitored).

UE Unit error = internal error (fault) of the module (always monitored in so far as the internal processor can detect this).

Troubleshooting in the remote modules

The LED (3) lights up, if the remote module has detected an error.

The remote module supplies detailed error information via the 8 LEDs (1), it the test button ” is pressed; see also the module descriptions.

The procedure will be explained in the following for the module ICSC 08 L1 as an example.

After the test button has been pressed for the first time, channel E/A0 (input/output 0) is selected: LED0 flashes. After the button has been released, the diagnosis data of this channel are shown via the yellow LEDs 0 to 7 for approx. 3 seconds.

The LEDs have the following meaning:

0 Error in the module (UE = Unit error)
1 Error on the bus (BE = Bus error)
2 not used
3 CI/CO = Cut wire of inputs/outputs
4 OL = Overload
5 SC = Short circuit
6 Configuration as output
7 Configuration as input

If the LEDs 6 and 7 light up at the same time, the channel is configured as a combined input/output.

The meaning of the LEDs (2) is also printed onto the front panel of the module.

The operation is repeated for the other channels each time the test button is pressed and released.

After the last channel E/A7 (input/output 7) has been scanned, pressing the test button again causes a lamp test (LED test) to be performed. All the 8 LEDs should light up. After the button has been released, the LEDs will show the setting of the DIL switch on the plug-in base for approx. 5 seconds. LED 0 shows the position of switch No. 1 (LEDs 0...7 are assigned to switches No. 1...8).

All the error messages are stored in the module and can only be deleted by pressing the test button for 10 seconds or by power OFF/ON.

B4.5 Acknowledgment of error messages in the remote modules

The remote modules store and display the error messages detected independently of the central unit. The error messages can be acknowledged

- on the remote module by pressing the test button
- in the user program by means of the function block CS31QU (this also deletes the error message stored in the central unit)
- in the terminal mode by means of the command MAIL, see volume 7.3, chapter 3.

If the error has not been eliminated, the error message appears again.

B4.6 Example of an error message

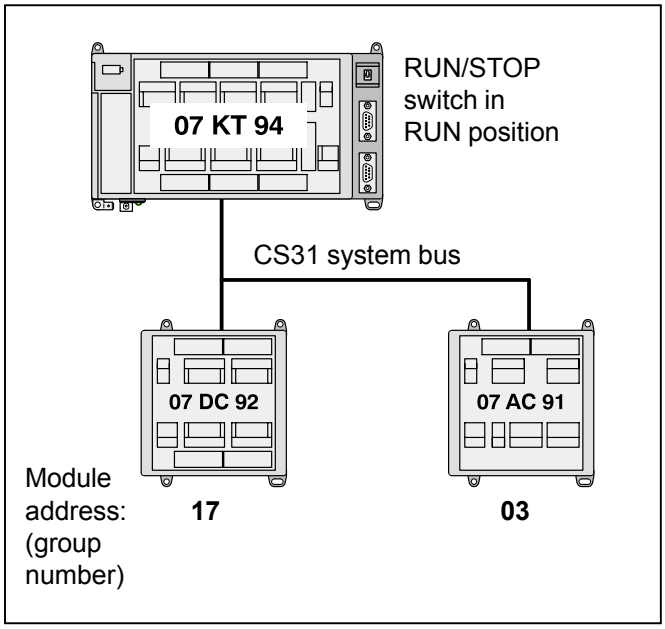

Errors which occurred:

The bus line to the remote module having the module address 3 has been broken during operation.

Error flags in the basic unit
07 KT 92 / 07 KT 93 / 07 KT 94:

It is assumed that the error flags have been set to 0 by acknowledgment/deletion before the error occurred. In the following, only those error flag will be listed the contents of which changes.

- M 255,10 = 1 — Summation error message
- M 255,13 = 1 — Error class message (FK3 error)
- MW 255,00 = 15 — Error detection: remote module is disconnected
- MW 255,01 = 05 — Module type: analog input and output
- MW 255,02 = 03 — Group number (module address)
- MW 255,03 = 0
- MW 255,04 = 0
- MW 255,05 = 0
- MW 255,06 = 0
- MW 255,07 = 0

  not concerned, as well as all other error flags which have not been mentioned

LED displays on the bus master basic unit 07 KR 91 / 07 KT 92 / 07 KT 93 / 07 KT 94:

- BA lights up ⇒ CS31 bus processor is active. The data communication with the remote module having the address 17 is continued.
- BE lights up ⇒ Bus Error, error on the CS31 system bus.
- RE lights up ⇒ Remote Unit Error, error on a remote module.
- SE off ⇒ Serial Unit Error, CS31 bus interfacing in the basic unit works correctly.
- RUN lights up
- FK3 lights up ⇒ light error

Reaction of the bus master basic unit 07 KR 91 / 07 KT 92 / 07 KT 93 / 07 KT 94

The processing program and the bus operation continue running (if KW 0,7 = 0).
Reaction of the remote module 07 AC 91: All of the outputs turn to 0.
Reaction of the remote module ICSC 08 L1: Data exchange with the bus master basic unit 07 KR 91 / 07 KT 92 / 07 KT 93 / 07 KT 94.

Status word EW 07,15 in the basic unit 07 KR 91 / 07 KT 92 / 07 KT 93 / 07 KT 94

- Bit 0 = 1 no class 2 error
- Bit 1 = 0 only applicable for 07 KR 91 / 07 KT 92 / 07 KT 93 / 07 KT 94 as slave
- Bit 2 = 1 Date/time of the real-time clock valid
- Bit 3 = 1 Battery effective
- Bit 4...7 not used
- Bit 8...15 = 2 max. number of modules connected to the CS31 system bus which have been found since the last power-on operation. Will not be altered by the error which has occurred in the meantime.

Acknowledgment of the error flags in the basic unit 07 KR 91 / 07 KT 92 / 07 KT 93 / 07 KT 94

Eliminate the error before acknowledgment. Otherwise the error message will appear again.

The bit flags M 255,10 and M 255,13 can be acknowledged by:

- power ON
- program ”Start” (on-line in the programming software 907 PC 331)
- cold start (menu item in 907 PC 331)
- setting the RUN/STOP switch to RUN
- overwriting the flag M 255,13 with ”0” in the user program
- overwriting the flag M 255,13 with ”0” by means of the operating function ”Overwrite”, see volume 7.3, chapter 3
- using the function block CS31QU in the user program. The block is applicable only for errors which concern the CS31 system bus. It also deletes the error message in the remote module.

The relevant LEDs turn off upon the acknowledgment.

The word flags MW 255,00...MW 255,07 can only be deleted by overwriting them. They are overwritten by newly occurring errors.

Acknowledgment of error flags in the remote module

- on the remote module by pressing the test button for a longer time
- in the user program of the basic unit using the CS31QU block
- in the terminal mode by means of the MAIL command, see volume 7.3, chapter 3.

B4.7 Error flags in the central unit, error classification

The basic unit offers error messages for the user program which are classified into 4 error classes (FK1...FK4) according to their severity. The error messages are stored in error flags and can be used in the user program and be read by the programming system.

The following table gives you an overview of the error flags.

Error class	**FK1** = Fatal error	**FK2** = Serious error	**FK3** = Light error	**FK4** = Warning
General feature of the error class, examples	Save operation of the operating system is no longer ensured. Error examples: – Checksum error in the operating system EPROM – Write/read error when testing the operating system RAM	The operating system works correctly, but the error-free processing of the user program is not guaranteed. Error examples: – Checksum error in the user program (Flash EPROM) – Write/read error when testing the operating system RAM	The choice whether the user program has to be aborted by the operating system or not depends on the application. The user decides which reactions are to be initiated. Error examples: – Flash EPROM cannot be programmed – Dual-port RAM to the CS31 part (LED SE) is faulty – Remote module has failed (LED RE)	Errors which occur on peripheral devices or which will show their effect only in the future. The user decides which reactions are to be initiated. Error examples: – Short-circuit on a remote module
Summation error message [1]	M 255,10			
Error class message (if 1, an error exists)	M 255,11	M 255,12	M 255,13	M 255,14
Error detection (word) [2] Detailed info 1 (word) [2] Detailed info 2 (word) [2] Detailed info 3 (word) [2] Detailed info 4 (word) [2] Detailed info 5 (word) [2] Detailed info 6 (word) [2] Detailed info 7 (word) [2]	MW 254,00 MW 254,01 MW 254,02 MW 254,03 MW 254,04 MW 254,05 MW 254,06 MW 254,07	MW 254,08 MW 254,09 MW 254,10 MW 254,11 MW 254,12 MW 254,13 MW 254,14 MW 254,15	MW 255,00 MW 255,01 MW 255,02 MW 255,03 MW 255,04 MW 255,05 MW 255,06 MW 255,07	MW 255,08 MW 255,09 MW 255,10 MW 255,11 MW 255,12 MW 255,13 MW 255,14 MW 255,15
LED displays after initialization	FK1 lights up or LED RUN does not go on, if the RUN/STOP switch is set to RUN	FK2 lights up or LED RUN does not go on, if the RUN/STOP switch is set to RUN	FK3 lights up. In addition according to error type:: LED BE (Bus Error) LED RE (Remote Unit Error) LED SE (Serial Unit Error)	LED RE (Remote Unit Error) lights up
Reaction when switching on the basic unit / Reaktion during operation	All the outputs remain set to 0 or are set to 0. The programming system does not have access. **Attention:** Both processors of the basic unit monitor each other mutually, thus facilitating a powerful diagnosis. If the safety requirements are higher, use specially approved control systems.	All the outputs remain set to 0 or are set to 0. The programming system can get access. The user program is not started or is aborted.	You can choose in case of an error: – Just report the error: Evaluate the error flag M 255,13 – Abort the user program: Set system constant KW 0,7 = 1 (FK3_REAK) or M 255,13 to the function block ABORT	Evaluation of the error messages using the user program
Acknowledgment of the summation error message / of the error class message	– Power ON – Cold start	– Power ON – Cold start	– Power ON / cold start – Set the RUN/STOP switch to RUN – Start the program using 907 PC 331 – Set M 255,13 or M 255,14 to 0 – In case of CS31 error: function block CS31QU	

[1]) The summation error flag M 255,10 becomes 1, if at least one of the error class flags is set to 1. If M 255,10 = 0, the basic unit has not found any error. The summation error flag is deleted automatically when the error class flags are acknowledged.

[2]) The basic unit enters the last found error into the relevant error flag record for each error class. The entry is made at the end of the program cycle and remains unchanged during the next running program cycle. The word flag can only be acknowledged by overwriting them with "0".

B4.8 Acknowledgment of error messages in the basic unit

Error messages remain stored and will be displayed until they are acknowledged. The following applies:

- The summation error message, the error class messages (bit flags) and the relevant LEDs FK1, FK2 and FK3 are reset with power ON, for example. For other possibilities for resetting/acknowledging them, see chapters B4.5 to B4.8.
- The error identifiers and the detailed information (word flags) have to be reset by means of the user program or by means of the operating function ”Overwrite”, see volume 7.3, chapter 3. They are also reset when a cold start is performed or by a power-fail, if no backup battery is effective.

The error message will appear again, if the error has not been eliminated.

B4.9 Additional diagnosis functions

Status word EW 07,15

The following data are continuously updated in the status word EW 07,15:

– Bit 0: This bit is valid for the stand-alone PLC, for the master PLC and for the slave PLC.
  Bit 0 = 1, there is no error of class 2.
  Bit 0 = 0, there is an error of class 2.

– Bit 1: This bit is valid only for the slave PLC.
  Bit 1 = 1, the slave PLC is adopted into the bus cycle of the master PLC.
  Bit 1 = 0, the slave PLC is *not* adopted into the bus cycle of the master PLC.

– Bit 2 = 1, date and time of the real-time clock are valid.

– Bit 3 = 1, battery is effective.

– Bits 4..7 are not used

– Bits 8...15: *Maximum* number of remote modules which have been existing in the CS31 bus cycle of the master PLC since the last power-ON or since the last cold start. Their number may be larger than the number of the remote modules which are *currently* existing in the CS31 bus cycle.

B4.10 Meaning of the contents of the error word flags

Explanation of the following table:

– Address = Memory address at which the error was detected.

– Group number = Module address of the remote module

– Channel number = Number of the faulty channel

– Module type Meaning

000	Digital input
001	Analog input
002	Digital output
003	Analog output
004	Digital input/output
005	Analog input/output
255	Bus master or slave basic unit in which the error has occurred and is stored.

Error class	Error description	Error identifier in MW 254,00 **D**ec **H**ex	Detailed info **1** in MW 254,01	Detailed info **2** in MW 254,02	Detailed info **3** in MW 254,03	Further detailed infos in MW 254,04 : MW 254,07
FK1 Fatal error	Checksum error of the system EPROM	1_D 1_H	–	–	–	–
	Operating system of the basic unit is defective, or a defective RAM is detected when a cold start is performed (complete RAM test)	2_D 2_H	Address	–	–	–

Error class	Error description	Error identifier in MW 254,08 **D**ec **H**ex	Detailed info **1** in MW 254,09	Detailed info **2** in MW 254,10	Detailed info **3** in MW 254,11	Further detailed infos in MW 254,12 : MW 254,15
FK2 Serious error	RAM defective (user program or operand memory)	**128_D 80_H**	Address	–	–	–
	Illegal master-slave identifier	**129_D 81_H**	–	–	–	–
	A serious error has occurred when the CS31 bus interfacing was initialized. The CS31 bus processor does not give any response to the PLC side within the specified time.	**130_D 82_H**	–	–	–	–
	PLC is overloaded, cycle time is too short.	**131_D 83_H**	–	–	–	–
	An error which cannot be specified in detail is detected by the operating system during the execution time.	**132_D 84_H**	–	–	–	–
	Checksum error in the Flash EPROM	**133_D 85_H**	–	–	–	–
	CS31 bus processor does not send an OK response to the PLC after a cold start command issued by the PLC.	**134_D 86_H**	–	–	–	–
	Error detection not used at the moment.	**135_D 87_H**	–	–	–	–
	CS31 bus processor reports an error via EW 07,15 bit 0. This bit is checked before each start of the PLC program.	**136_D 88_H**	–	–	–	–
	An illegal value has been configured (KW 00,10 or KW 00,11) for specifying the size of the I/O area between the master PLC and the slave PLC.	**137_D 89_H**	–	–	–	–
	More timers than available in the PLC were required during the execution time.	**257_D 101_H**	–	–	–	–
	An unknown operator/function block is detected in the user program during the execution time.	**258_D 102_H**	–	–	–	–
	CS31 bus processor does not work correctly. Therefore it does not authorize the operating processor to access the dual-port RAM.	**259_D 103_H**	–	–	–	–
	The I/O processor does not work correctly. The life identifier does not change.	**260_D 104_H**	–	–	–	–

Error class	Error description	Error identifier in MW 255,00 **D**ec **H**ex	Detailed info **1** in MW 255,01	Detailed info **2** in MW 255,02	Detailed info **3** in MW 255,03	Further detailed infos in MW 255,04 : MW 254,07
FK3 Light error	Remote module disconnected	**15_D** **F_H**	Module type	Group number	–	–
	CS31 bus error (no remote module on the system bus) **Note:** If there are only analog modules connected to the CS31 system bus, this error message may occur when the supply voltage is switched on although the analog modules have been correctly adopted into the CS31 bus cycle after a certain time. **Reason:** The analog modules have a long initialization time. After this time is over, they only now appear on the CS31 system bus as remote modules. During the initialization time the master PLC cannot recognize them.	**16_D** **10_H**	–	–	–	–
	The Flash EPROM is not programmable.	**128_D** **80_H**	Address of defective memory cell	–	–	–
	The Flash EPROM cannot be deleted.	**129_D** **81_H**	Address of memory cell undeletable	–	–	–
	The PLC application mode configured in the system constant KW 00,00 has not been activated yet. Please perform activation (see also system constant KW 00,00).	**130_D** **82_H**	Value of KW 00,00 activated last	Value of KW 00,00 not yet activated	–	–
	CRC error in Flash EPROM	**131_D** **83_H**	Address of the block with CRC error	Segment address of the block with CRC error	–	–

Error class	Error description	Error identifier in MW 255,08 **D**ec **H**ex	Detailed info **1** in MW 255,09	Detailed info **2** in MW 255,10	Detailed info **3** in MW 255,11	Further detailed infos in MW 255,12 : MW 254,15
FK4 Warning	Internal error of a remote module	1_D 1_H	Module type	Group number	Channel number	–
	Cut wire (open circuit)	2_D 2_H	Module type	Group number	Channel number	–
	Wrong level on an analog output	3_D 3_H	Module type	Group number	Channel number	–
	Overload	4_D 4_H	Module type	Group number	Channel number	–
	Overload + cut wire	6_D 6_H	Module type	Group number	Channel number	–
	Short-circuit	8_D 8_H	Module type	Group number	Channel number	–
	Cut wire (concerning analog modules)	9_D 9_H	Module type	Group number	Channel number	–
	Short-circuit + cut wire "Out of range" at analog modules	10_D A_H	Module type	Group number	Channel number	–
	Overload + short-circuit	12_D C_H	Module type	Group number	Channel number	–
	Short-circuit + overload+ cut wire (open circuit)	14_D E_H	Module type	Group number	Channel number	–
	There is no user program when the system is started	128_D 80_H	–	–	–	–
	During start-up, the system detects that the program end is missing	129_D 81_H	–	–	–	–
	During start-up, the system detects that the number of block parameters has not been specified correctly for a certain block	130_D 82_H	Program addrese of the block	Program address of the faulty block parameter	–	–
	During start-up, a syntax error in the user program is detected	131_D 83_H	Program address	–	–	–
	During start-up, the system detects that the historical value memory is too small.	132_D 84_H	–	–	–	–
	During start-up, the system detects that no cycle time has been set.	133_D 85_H	–	–	–	–
	During start-up, the system detects that there are bracketing errors in the user program.	134_D 86_H	Program address	–	–	–
	During start-up, the system detects that the target label for a conditional jump is missing.	135_D 87_H	Program address	–	–	–

Error class	Error description	Error identifier in MW 255,08 **D**ec **H**ex	Detailed info **1** in MW 255,09	Detailed info **2** in MW 255,10	Detailed info **3** in MW 255,11	Further detailed infos in MW 255,12 : MW 254,15
FK4 Warning	Internal error (non-maskable internal interrupt has occurred)	**136**$_D$ **88**$_H$	–	–	–	–
	Interneal error (an inhibited interrupt has occurred)	**137**$_D$ **89**$_H$	–	–	–	–
	The PLC program is not started because the number of remote modules which are adopted into the CS31 bus cycle is smaller than the number configured in KW 00,09.	**138**$_D$ **8A**$_H$	Configured number of remote modules (KW 00,09)	Actual number of modules connected to the CS31 bus cycle	–	–
	The PLC does not access the process inputs and outputs yet because the number of remote modules which are adopted into the CS31 bus cycle is smaller than the number configured in KW 00,09.	**139**$_D$ **8B**$_H$	Configured number of remote modules (KW 00,09)	Actual number of modules connected to the CS31 bus cycle	–	–
	The module works with default adjustment values for the direct analog inputs and outputs rather than with the values set in the factory.	**140**$_D$ **8C**$_H$	–	–	–	–

B4.11 Reaction of the bus master basic unit and the remote moduls in case of errors

<table>
<tr><th>No.</th><th>Error</th><th>Display/reaction of the bus master basic unit</th><th>Display/reaction of the in-/ outputs of the remote units</th><th>Display/reaction of the bus slave basic units</th></tr>
<tr><td>1</td><td>Bus master basic unit has failed, e.g. because of power failure</td><td>No display,,
all outputs are off.</td><td rowspan="3">LED (3) lights up.
All outputs are turned to 0.</td><td rowspan="3">07 KR 91 / 07 KT 9x:
– LED BA lights up
LED RE flashes
– Bit 1 = 0 in the status word EW 07,15

07 KR 31 / 07 KT 31:
– Error LED flashes
– Bit 1 = 0 in the status word EW 07,15</td></tr>
<tr><td>2</td><td>Bus master function of the basic unit (Serial Unit) has failed, e.g. the bus processor is defective</td><td>Displays:
FK2 = Serious Error
SE = Serial Unit Error
Flags:
M 255,10 = 1
M 255,12 = 1
for further flags see B4.7</td></tr>
<tr><td>3a

or

3b</td><td>CS31 system bus with at least 2 remote modules is disconnected (all the remote modules are disconnected)

CS31 system bus is short-circuited</td><td>Displays:
FK3 = Light Error
BE = Bus Error
RE = Remote Unit Error
SE = Serial Unit Error

Flags:
M 255,10 = 1
M 255,13 = 1
for further flags see B4.7</td></tr>
<tr><td>4a</td><td rowspan="2">CS31 system bus is disconnected (the remote modules are only disconnected in part)</td><td rowspan="2">Displays:
FK3 = Light Error
BE = Bus Error
RE = Remote Unit Error

Flags:
M 255,10 = 1
M 255,13 = 1
for further flags see B4.7</td><td>Remote modules without connection to the bus master basic unit:
same as 1</td><td>Slave basic units without connection to the bus master basic unit:
same as 1</td></tr>
<tr><td>4b</td><td>Remote modules with connection to the bus master basic unit:
no display/no reaction</td><td>Slave basic units with connection to the bus master basic unit:
no display/no reaction</td></tr>
<tr><td>5a</td><td>Master basic unit does not find any remote module after power ON or cold start or
CS31 system bus with at least 3 remote modules: 2 remote modules are disconnected.</td><td rowspan="4">Anzeigen:
BE = Bus Error
Merker:
M 255,10 = 1
M 255,13 = 1
for further flags see B4.7</td><td>Remote modules with connection to the bus master basic unit:
no display/no reaction</td><td>Slave basic units with connection to the bus master basic unit:
no display/no reaction</td></tr>
<tr><td>5b</td><td>No connection to the CS31 system bus</td><td rowspan="2">Remote modules without connection to the bus master basic unit:
same as 1</td><td rowspan="2">Slave basic units without connection to the bus master basic unit:
same as 1</td></tr>
<tr><td>5c</td><td>defective remote modules</td></tr>
<tr><td>5d</td><td>Power failure</td><td>not clear</td><td>Error class FK1 / FK2,
all outputs turn to 0.</td></tr>
<tr><td>6a</td><td rowspan="2">An error has occurred at the inputs or outputs of a remote module, e.g. a short-circuit</td><td rowspan="2">RE = Remote Unit Error

Flags:
M 255,10 = 1
M 255,14 = 1 (FK4)</td><td>Involved remote module:

LED (3) lights up

The LEDs (1) supply detailed infos when using the test button (4).</td><td>Involved 07 KT 9x:
LED Ovl. = Short-circuit
07 KT 31: Error LED ON

Flags (07 KT 9x, KT 31):
M 255,10 = 1
M 255,14 = 1
for further flags see B4.7</td></tr>
<tr><td>6b</td><td>not involved remote mod.:
no display/no reaction</td><td>not involved slave CPUs:
no display/no reaction</td></tr>
</table>

Reaction of the bus master basic unit and the remote modules in case of errors (continued)

No.	Error	Display/reaction of the bus master basic unit	Display/reaction of the in-/ outputs of the remote units	Display/reaction of the bus slave basic units
7a	Two remote input modules of the same type have been set to the same address.	This error is detected only when the signal statuses of the two modules become different. The telegram is faulty in this case, and the modules are considered to be disconnected. Display: RE = Remote Unit Error Flags: M 255,10 = 1 M 255,13 = 1 others see B4.7 / B4.10	Involved modules: same as 1 Other modules: no display/no reaction	Same as 1
7b	Two remote modules of the same type have been set to the same address	No reaction, unless there is a large distance between the remote modules.	Error-free operation of the two modules, unless they are far apart from each other.	Not applicable because inputs and outputs are always present.
7c	Two remote modules of different types, but with overlapping ranges, have been set to the same address, e.g. ICSI 16 D1 and ICSK 20 F1.	The error is already detected during initialization. The two remote modules are not adopted into the bus cycle.	Involved modules: same as 1 Other modules: no display/no reaction	Involved modules: same as 1 Other modules: no display/no reaction
7d	Address 62 or 63 has been set to a digital remote module.B	Is not detected.	– Signal output in parallel to the bus master – Input signals are ignored.	–
7e	An address greater than 5 has been set to an analog module.	Is not detected.	Same as 1	–

B5 Programming and test

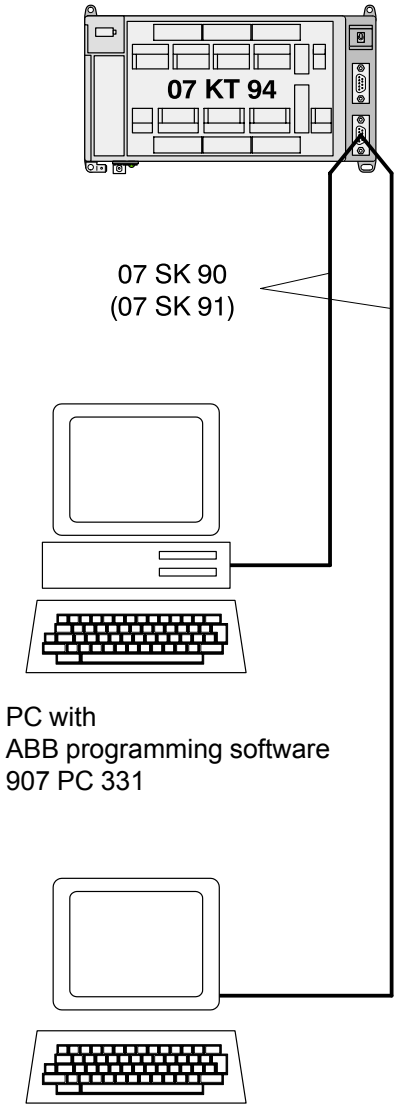

- Creation of the user program

  using the programming languages

  – Extended instruction list (ext. IL)
  – Function block diagram (FBD) and
  – Ladder diagram (LD)

  Test in ext. IL, FBD and LD (see 907 PC 331)

- Test in terminal mode,

  e.g. in the programming software 907 PC 331
  (main menu PLC commun. 2,
  submenu Terminal emulation)

- Test

  The terminal interface has to be set to 9600 baud, 8 data bits, no parity bit and 1 stop bit.

In order to establish the connection between the programming and test tools *and* the basic unit 07 KT 94, the serial interface COM1 of the basic unit 07 KT 94 has to be set to "Active mode" in all cases, see chapter "Serial interface COM1" in the description of the basic unit.

B6 Man-machine communication

see system description Advant Controller 31, volume 6

B7 Operands 07 KT 94 (variables and constants)

Using the man-machine communication, display and alteration of operands is very important. Therefore, an overview of all operands of the PLC is listed here.

B7.1 Available variables and constants

Inputs

E 00,00...E 61,15	:	Digital inputs, CS31 remote modules
E 62,00...E 63,15	:	Digital inputs of the basic unit 07 KT 94
E 64,00...E 64,07	:	Digital inputs of the basic unit 07 KT 94 (created from EW 06,00...EW 6,07)
E 65,00...E 99,15	:	reserved
E 100,00...E 163,15	:	reserved
E 200,00...E 263,15	:	reserved
EW 00,00...EW 05,15	:	Analog inputs, CS31 remote modules
EW 06,00...EW 06,07	:	Analog inputs of the basic unit 07 KT 94
EW 07,00...EW 07,07	:	reserved
EW 07,08...EW 07,14	:	Read real-time clock
EW 07,15	:	Status for CS31 system bus
EW 08,00...EW 15,15	:	Analog inputs, CS31 remote modules
EW 16,00...EW 34,15	:	reserved
EW 100,00...EW 107,15	:	reserved
EW 200,00...EW 207,15	:	reserved

Outputs

A 00,00...A 61,15	:	Digital outputs, CS31 remote modules
A 62,00...A 63,07	:	Digital outputs of the basic unit 07 KT 94
A 62,00	:	high-speed counter, after activation of the direct output for the counter's zero crossing
A 65,00...A 99,15	:	reserved
A 100,00...A 163,15	:	reserved
A 200,00...A 263,15	:	reserved
AW 00,00...AW 05,15	:	Analog outputs, CS31 remote modules
AW 06,00...AW 06,03	:	Analog outputs of the basic unit 07 KT 94
AW 07,00...AW 07,15	:	reserved
AW 08,00...AW 15,15	:	Analog outputs, CS31 remote modules
AW 16,00...AW 34,15	:	reserved
AW 100,00...AW 107,15	:	reserved
AW 200,00...AW 207,15	:	reserved

Internal operands

M 00,00...M 254,15	:	Binary flags
M 255,00	:	Oscillator ca. 2 Hz
M 255,01	:	Oscillator ca. 1 Hz
M 255,02	:	Oscillator ca. 0,5 Hz
M 255,03	:	Oscillator with a period of ca. 1 minute
M 255,04	:	Oscillator ca. 1/8 Hz
M 255,05	:	Oscillator ca. 4 Hz
M 255,06	:	Oscillator ca. 8 Hz
M 255,10	:	Summation error message
M 255,11	:	Error message FK1
M 255,12	:	Error message FK2
M 255,13	:	Error message FK3
M 255,14	:	Error message FK4
M 255,15	:	Detection of "New start"
M 256,00...M 279,15	:	System flags / reserved
M 280,00...M 511,15	:	Binary flags

S 00,00...S 255,15 : Steps
K 00,00...K 00,01 : Binary constants

MW 00,00...MW 253,15 : Word flags
MW 254,00...MW 255,15 : Error messages
MW 256,00...MW 259,15 : System flags / reserved
MW 260,00...MW 511,15 : User range
KW 01,00...KW 79,15 : Word constants

MD 00,00...MD 63,15 : Double word flags
KD 00,01...KD 23,15 : Double word constants

Time values for time functions

KD yy,xx : Time values for time functions such as ESV, ASV etc. are configured as *double word constants* or as
MD yy,xx : *double word flags*. Only integral multiples of 1 ms are permitted.

B7.2 Direct constants

Direct constants are only allowed at certain inputs of certain function blocks. For more information, see the descriptions of the function blocks.

-32768...+32767
#H 0000...FFFF

B7.3 Labels

Labels are jump targets for forward jumps and run number blocks.

MA 0...999

B7.4 System constants

Setting the operating modes

The constants KW 00,00...KW 00,15 are reserved as system constants. Even the constants KW 00,13...KW 00,15 and KW 80,00...KW 89,15 which are not used yet may *under no circumstances* be used for other purposes.

KW 00,00 : Set PLC operating modes, (stand-alone PLC, master PLC, slave PLC)
KW 00,01 : Initialization: Binary flag area
KW 00,02 : Initialization: Word flag area
KW 00,03 : Initialization: Double word flag area
KW 00,04 : Initialization: Step chain flag area
KW 00,05 : Initialization: Historical values
KW 00,06 : Application modes of the serial interface COM 1
KW 00,07 : PLC reaction to class 3 errors
KW 00,08 : PLC reaction to an overload/short-circuit at transistor outputs
KW 00,09 : Minimum number of remote modules which are adopted into the CS31 bus cycle
KW 00,10 : Size of the transmitting area of the slave PLC
KW 00,11 : Size of the receiving area of the slave PLC
KW 00,12 : Automatic warm start after an FK2 error
KW 00,15 : Deactivate oscillators at M 255,00...M 255,06

KW 85,00...KW 85,03 : Configuration of the signal delay of digital inputs
KW 85,02 : Configuration of the operating modes of the high-speed counter
KW 86,00...KW 86,07 : Configuration of the analog inputs
KW 88,00...KW 88,03 : Configuration of the analog outputs

Setting the cycle time

KD 00,00 : The cycle time of the PLC program is preset with this constant. The cycle time is given in ms. Only integral multiples of 1 ms are permitted.

B7.5 System flags / diagnosis flags

M 00,00...M 254,15 : Binary flags
M 255,00 : Oscillator ca. 2 Hz
M 255,01 : Oscillator ca. 1 Hz
M 255,02 : Oscillator ca. 0,5 Hz
M 255,03 : Oscillator with a period of ca. 1 minute
M 255,04 : Oscillator ca. 1/8 Hz
M 255,05 : Oscillator ca. 4 Hz
M 255,06 : Oscillator ca. 8 Hz

M 255,10 : Summation error message, indicates that the PLC has detected an error
M 255,11 : Error message FK1, fatal error, detailed information in MW 254,00...MW 254,07
M 255,12 : Error message FK2, serious error, detailed information in MW 254,08...MW 254,15
M 255,13 : Error message FK3, light error, detailed information in MW 255,00...MW 255,07
M 255,14 : Error message FK4, warning, detailed information in MW 255,08...MW 255,15

M 255,15 : Detection of "New start"

MW 254,00...MW 255,15 : Error messages

First-cycle detection

M 255,15
This binary flag can be used for the *first* program cycle after a program start. It is always set to "0" after each program start, independent of the initialization instructions given by the system constants. If this flag is read by the user program and then set to "1", it can be found out whether or not the user program was started once more.

B7.6 CS31 status word

EW 07,15
Bit 0 = 1 : No class 2 error present
Bit 1 = 1 : PLC has been adopted into the CS31 bus cycle (only relevant if used as a slave).
Bit 2 = 1 : Time and date are valid.
Bit 3 = 1 : Battery is effective.
Bit 4...7 : Not used.
Bit 8..15 : Maximum number of modules on the CS31 system bus, found out until now (only relevant if used as a master).

B7.7 System constants / Setting of operating modes

- **Definitions**

Cold start

– All of the RAM memories are tested and deleted.

– If there is *no user program* in the Flash EPROM, the default values are set to all of the system constants (identical to the factory settings).

– If there is *a user program* in the Flash EPROM, the program is loaded into the RAM including the system constants.

– The operating modes given by the system constants are set.

– Der CS31 system bus is initialized again (only when used as a master on the CS31 system bus).

Performing a cold start

– Power OFF/ON, if there is *no* backup battery or

– Command KALT <CR> in terminal mode (see volume 7.3) or

– Menu item ”Cold start” in the programming system

Warm start

– All of the RAM memories, with the exception of the program memory and the operand memory (flags), are tested and deleted.

– If there is *a user program* in the Flash EPROM, the program is loaded into the RAM including the system constants.

– The operating modes given by the system constants are set.

– Der CS31 system bus is initialized again (only when used as a master on the CS31 system bus).

Performing a warm start

- Power OFF/ON, if there is a backup battery or
- Command WARM <CR> in terminal mode (see volume 7.3) or
- Menu item "Release PLC mode" in the programming system

- **Operating mode: Master PLC, slave PLC or stand-alone PLC**
  - Absolute identifier: KW 00,00
  - Symbolic identifier: MAST_SLV
  - Meaning of the value of the constants:
    - Master PLC at the CS31 system bus: -1 ($FFFF_H$)
    - Stand-alone PLC: -2 ($FFFE_H$)
    - Slave PLC at the CS31 system bus: module address
      CS31 module addresses: 0...61, 100...115
  - Range of values: -2, -1, 0...61, 100...115
  - Default value: -2 (stand-alone PLC)

Important!

The change of the PLC operating mode is carried out in 3 steps:

1. Change system constant KW 00,00 in the PLC
2. Save PLC program in the Flash EPROM
3. Activate new PLC operating mode with the following steps:
   - Call menu item "Release PLC mode" in the ABB programming and test system or
   - Perform a warm start or
   - Perform a cold start.

- **Backup of data areas**

Backup of data areas, i.e. saving of data during power OFF/ON, is only feasible with built-in battery. The following data can be backed, completely or partly:

- Binary flags
- Word flags
- Double word flags
- Step chains
- Historical values

In order to backup certain data, they have to be excluded from initialization to 0.

- **Initialization of data areas**

During *program start*, that data areas are initialized to 0 partly or completely, that are defined by system constants. The initialization works as shown in the following table.

If no battery is effective or if the system constants are in their default values (factory settings), all of the above mentioned data areas are completely set to 0 after power OFF/ON.

Conditions, --> Action	Flags, step chains and historical values which are initialized (set to 0)
No battery available, --> Power ON	all
Menu item --> Abort --> Cold start	all
Battery effective, RUN/STOP switch set to RUN, --> Power ON	according to the values of the system constants, (see below)
RUN/STOP switch, --> RUN	
Menu item --> Abort --> Start	

Initialization: Binary flags

- Absolute identifier: KW 00,01
- Symbolic identifier: INIT_M

Value **n** of the system constant KW 00,01	Binary flag areas which are initialized (set to 0)
n = 0 (default)	M 000,00...M 511,15
n = 1...511	M n,00...M 511,15
n < 0, n > 511	M 255,10...M 511,15

- Example: KW 00,01 = 52
  Initialized is: M 52,00...M 511,15
  Backed is: M 00,00...M 51,15
  Precondition: Battery is available

Initialization: Word flags

– Absolute identifier: KW 00,02
– Symbolic identifier: INIT_MW

Value **n** of the system constant KW 00,02	Word flag areas which are initialized (set to 0)
n = 0 (default)	MW 000,00...M 511,15
n = 1...511	MW n,00...M 511,15
n < 0, n > 511	no initialization

Initialization: Double word flags

– Absolute identifier: KW 00,03
– Symbolic identifier: INIT_MD

Value **n** of the system constant KW 00,03	Double word flag areas which are initialized (set to 0)
n = 0 (default)	MD 00,00...MD 63,15
n = 1...63	MD n,00...MD 63,15
n < 0, n > 63	no initialization

Initialization: Step chains

– Absolute identifier: KW 00,04
– Symbolic identifier: INIT_S

Value **n** of the system constant KW 00,04	Step chain areas which are initialized (set to 0)
n = 0 (default)	S 000,00...S 255,15
n = 1...255	S n,00...S 255,15
n < 0, n > 255	no initialization

Initialization: Historical values

– Absolute identifier: KW 00,05
– Symbolic identifier: INIT_VW

Wert **n** of the system constant KW 00,05	Historical values which are initialized (set to 0)
n = 0 (default)	Initialization of all historical values
n < 0, n > 0	no initialization

- **Application mode: Serial interface COM1**
  – Absolute identifier: KW 00,06
  – Symbolic identifier: MODE_SST
  – Default value: 0

  MODBUS-Master
  KW 00,06 = 100

  MODBUS-Slave
  KW 00,06 = 100 + Slave Number

  see Chap. 4.10.2 MODBUS operating modes

Table: Conditions for the settings of the operating modes of the COM1 interface

RUN/ STOP switch	System constant KW 00,06	System cable / device	Mode set by this
STOP	x	x	Active
RUN	1	x	Active
	2	x	Passive
	0, <0, >2	07 SK 90	Active
		07 SK 91	Passive

x: without effect

  – A change of this system constant becomes effective:
    – immediately

- **PLC reaction to class 3 errors**
  – Absolute identifier: KW 00,07
  – Symbolic identifier: FK3_REAK
  – Meaning of the value of the constant:
    Just output error: 0
    Output error and abort PLC program <0, >0
  – Range of values: <0, =0, >0
  – Default value: 0
    i.e. just output error
  – A change of this system constant becomes effective:
    – immediately

- **Initialization of the CS31 system after Power ON, warm start or cold start**
  - Absolute identifier: KW 00,09
  - Symbolic identifier: HOCHFAHR
  - This system constant is only effective if the basic unit is configured as a bus master.
  - Meaning of the value of the constant:

    The user program is started. The basic unit takes no notice of initialization of the CS31 remote modules and their adoption into the CS31 bus cycle: =0

    The user program is not started until at least *n* remote modules have been initialized and adopted into the CS31 bus cycle: =+n

    The user program is started. It does not handle the process inputs and outputs until at least *n* remote modules have been initialized and adopted into the CS31 bus cycle. However, the CS31 status information in EW 07,15 is available as early as with the program start. This is also valid for the dual-port RAM image of the two high-speed inputs at terminals 02 and 03: =–n
  - Range of values: –31...+31
  - Default value: 0
    i.e. the user program is started immediately.

  A change of this system constant becomes effective:
  - with the next warm start or
  - with the next cold start.

- **Size of the transmitting area of the slave PLC**
  - Absolute identifier: KW 00,10
  - Symbolic identifier: SLV_SEND
  - Meaning of the value of the constant:

    The slave PLC can be used at the CS31 system bus *either* in the binary *or* in the word area. The binary values are transferred byte by byte. It is possible to set the number of bytes (or words) which are to be sent from the slave PLC to the master PLC.
  - For use in the binary area: Transmitting: 0...15 Bytes 0...15
  - For use in the word area: Transmitting: 0...8 words 100...108
  - Default value: 0
  - Range of values: 0...15 and 100...108

  A change of this system constant becomes effective:
  - with the next warm start or
  - with the next cold start.

  Note:

  The default setting
  - in the binary area is:
    - transmit 4 bytes and
    - receive 4 bytes.

  This is obtained by the default combination KW 00,10 = KW 00,11 = 0.
  The configured combination KW 00,10 = KW 00,11 = 4 has the same result as the default combination.

  The combination KW 00,10 = KW 00,11 = 100 *is inadmissible!* It would mean: Transmit 0 words and receive 0 words.

  When employed in the word area, the unused higher 8 channels of the address can be used by an analog module (not by KR/KT).

- **Size of the receiving area of the slave PLC**
  - Absolute identifier: KW 00,11
  - Symbolic identifier: SLV_REC
  - Meaning of the value of the constant:

    The slave PLC can be used at the CS31 system bus *either* in the binary *or* in the word area. It is possible to set the number of bytes (or words) which are to be received by the slave PLC from the master PLC.
    - For use in the binary area:: Receiving: 0...15 Bytes 0...15
    - For use in the word area: Receiving: 0...8 words 100...108
    - Default value: 0
    - Range of values: 0...15 and 100...108

  A change of this system constant becomes effective:
  - with the next warm start or
  - with the next cold start.

  Note:

  The default setting
  - in the binary area is:
    - transmit 4 bytes and
    - receive 4 bytes.

  This is obtained by the default combination KW 00,10 = KW 00,11 = 0.
  The configured combination KW 00,10 = KW 00,11 = 4 has the same result as the default combination.

  The combination KW 00,10 = KW 00,11 = 100 *is inadmissible!* It would mean: Transmit 0 words and receive 0 words.

  When employed in the word area, the unused higher 8 channels of the address can be used by an analog module (not by KR/KT).

- **Automatic warm start after an FK2 error**
  - Absolute identifier: KW 00,12
  - Symbolic identifier: SYSTEM
  - By means of the system constant KW 00,12 an automatic warm start can be configured after an FK2 error:

    Bit 0 of KW 00,12 = 0: no automatic warm start
  - Bit 0 of KW 00,12 = 1: automatic warm start

    The bits 1...15 of KW 00,12 must be 0.

  A change of this system constant becomes effective:
  - with the next warm start.

- **Configuration of the oscillators**
  - Absolute identifier: KW 00,15
  - KW 00,15 = 0 $\rightarrow$ oscillators active at M 255,00 to M 255,06
  - KW 00,15 = 1 $\rightarrow$ oscillators are moved to M 256,00 to M 256,06
  - KW 00,15 = 2 or 3 $\rightarrow$ no oscillators at all

- **PLC cycle time**
  - Absolute identifier: KD 00,00
  - Symbolic identifier: ZYKL_ZEIT
  - Meaning of the value of the constants:

    The PLC program is processed cyclically in the time intervals stated by the set cycle time. The entries are made in ms. The smallest cycle time that can be entered is 1 ms. Only integral multiples of 1 ms are permissible.
  - Range of values: ≥ 1
  - Default value: 10

  A change of this system constant becomes effective:
  - with the next program start.



ABB STOTZ-KONTAKT GmbH
Eppelheimer Straße 82 Postfach 101680
D-69123 Heidelberg D-69006 Heidelberg

Telephone +49 6221 701-0
Telefax +49 6221 701-1111
E-Mail desst.helpline@de.abb.com
Internet http://www.abb.de/stotz-kontakt