Atten：Smiling
Mobile/WhatsApp:+86 18050035902
E-mail: info@htechplc.com

Advant® Controller 450

Advant® OCS
with Master software

User's Guide

3BSE 002 415R701 Rev A

Use of **DANGER**, **WARNING**, **CAUTION**, and **NOTE**

This publication includes, **DANGER**, **WARNING**, **CAUTION**, and **NOTE** information where appropriate to point out safety related or other important information.

DANGER Hazards which could result in severe personal injury or death

WARNING Hazards which could result in personal injury

CAUTION Hazards which could result in equipment or property damage

NOTE Alerts user to pertinent facts and conditions.

Although **DANGER** and **WARNING** hazards are related to personal injury, and **CAUTION** hazards are associated with equipment or property damage, it should be understood that operation of damaged equipment could, under certain operational conditions, result in degraded process performance leading to personal injury or death. Therefore, comply fully with all **DANGER**, **WARNING**, and **CAUTION** notices.

TRADEMARKS

Advant, AdvaBuild, Advant Controller, Advant Fieldbus, Advant Station, MasterBatch, MasterGate, MasterBus, MasterFieldbus, ABB Master, ABB MasterNet, ABB MasterPiece and ABB MasterView registered trademarks of ABB Asea Brown Boveri Ltd. Switzerland.

Allan-Bradley is a trademark of Allan-Bradley Inc.

CardTalk is a trademark of Microsoft Corporation.

Epson is a registered trademark of Epson Corporation.

HART is a trademark of Rosemount Inc.

Master Safeguard is a trademark of ABB Industri AS, Norway.

Mannesmann Tally is a trademark of Mannesmann Tally Limited.

MC 68040 is a registered trademark of MOTOROLA Inc.

MODBUS is a registered trademark of Gould Electronics.

PROFIBUS-DP is a trademark of the international organization PROFIBUS INTERNATIONAL (PI).

Echelon, LON, LonTalk, LONWORKS, and Neuron are registered trademarks of Echelon Corporation.

Siemens and all Siemens-products mentioned in this publication are trademarks of Siemens AG.

UDPCE is a trademark of ABB Industri AS, Norway.

VT100 is a trademark of Digital Equipment Corporation.

NOTICE

The information in this document is subject to change without notice and should not be construed as a commitment by ABB Automation Products AB. ABB Automation Products AB assumes no responsibility for any errors that may appear in this document.

In no event shall ABB Automation Products AB be liable for direct, indirect, special, incidental or consequential damages of any nature or kind arising from the use of this document, nor shall ABB Automation Products AB be liable for incidental or consequential damages arising from use of any software or hardware described in this document.

This document and parts thereof must not be reproduced or copied without ABB Automation Products AB's written permission, and the contents thereof must not be imparted to a third party nor be used for any unauthorized purpose.

The software described in this document is furnished under a license and may be used, copied, or disclosed only in accordance with the terms of such license.

CE MARKING

This product meets the requirements specified in EMC Directive 89/336/EEC and in Low Voltage Directive 73/23/EEC.

Copyright © ABB Automation Products AB 2000.

3BSE001264/E

Template: 3BSE001286/E

3BSE 002 415R701 Rev A

TABLE OF CONTENTS

Chapter 1 - Introduction

1.1 General Information ... 1-1
1.2 Manual Organization ... 1-2
1.3 Conventions ... 1-5
1.4 Related Documentation ... 1-5
1.5 Release History ... 1-9
1.6 Terminology ... 1-12
1.7 Product Overview ... 1-16
1.7.1 Product Versions ... 1-18
1.7.1.1 Version Designation ... 1-19
1.7.2 Product Structure ... 1-19
1.7.3 General System Utilities ... 1-24
1.7.3.1 CPU ... 1-24
1.7.3.2 Memory ... 1-25
1.7.3.3 Program Module Contents ... 1-27
1.7.3.4 System Clock, External Clock Synchronization ... 1-35
1.7.3.5 Configuration ... 1-35
1.7.3.6 Execution ... 1-35
1.7.3.7 Start-up ... 1-36
1.7.4 Free-Programmable Module ... 1-36
1.7.5 Power Supply ... 1-36
1.7.6 Process Interface ... 1-45
1.7.6.1 S100 I/O ... 1-54
1.7.6.2 S400 I/O ... 1-68
1.7.6.3 S800 I/O ... 1-70
1.7.7 Communication ... 1-80
1.7.7.1 Provided Link Types ... 1-80
1.7.7.2 Applied Communication ... 1-90
1.7.8 Process Control ... 1-92
1.7.8.1 Application Language ... 1-92
1.7.8.2 Principles of Application Building ... 1-95
1.7.8.3 Control Functions ... 1-97
1.7.9 Operator's Interface ... 1-103
1.7.9.1 Maintenance Personnel ... 1-103
1.7.9.2 Local Operator ... 1-104
1.7.9.3 Central Operator ... 1-105
1.7.9.4 Printer ... 1-106
1.7.10 Availability and Security ... 1-106

1.7.10.1 Diagnostics 1-108
1.7.10.2 Redundancy 1-111
1.7.11 Mechanics 1-116
1.7.11.1 Cabinets 1-116
1.7.11.2 Subracks 1-120
1.7.11.3 Submodule Carrier and Submodule 1-123
1.8 User Interface 1-124

Chapter 2 - Installation

2.1 Site Planning Environment 2-1
2.1.1 Site Selection and Building Requirements 2-1
2.1.2 Environmental Considerations 2-2
2.1.3 Electromagnetic Compatibility 2-3
2.1.3.1 Summary of CE-marking Aspects 2-4
2.1.4 Standard Layout and Disposition of Cabinets 2-5
2.1.5 Grounding 2-8
2.1.6 Cables 2-9
2.1.7 Power Supply and Fusing 2-9
2.1.8 Process Connection 2-11
2.1.8.1 Connection Principles, Fusing and Voltage Distribution 2-11
2.1.9 Hazardous Applications 2-13
2.1.10 High Voltage Switch-gear Applications 2-13
2.1.11 Lightning Stroke Protection 2-13
2.1.12 Weight and Mounting Dimensions 2-13
2.1.13 Transportation and Storing 2-15
2.2 Setup 2-15
2.2.1 Safety Regulations 2-16
2.2.1.1 Personnel and Process Safety 2-16
2.2.1.2 Machine Safety 2-17
2.2.2 Unpacking and Storing 2-18
2.2.3 Location 2-18
2.2.4 Arrange the Cabinets 2-18
2.2.5 Grounding 2-19
2.2.5.1 General 2-19
2.2.5.2 Protective Earth 2-19
2.2.5.3 Earth Line 2-19
2.2.5.4 Grounding of Process Cable Shields 2-19
2.2.5.5 Grounding of Communication Cable Shields 2-21
2.2.5.6 Grounding of "Internal" System Cable Shields, Connection Unit -- I/O Board 2-24

2.2.5.7 Grounding of Process Signals 2-25
2.2.5.8 Grounding of Additional Equipment 2-26
2.2.5.9 Spare Conductors 2-26
2.2.6 Cable Routing in Cabinets 2-26
2.2.7 Power Supply Connection 2-28
2.2.7.1 General 2-28
2.2.7.2 Installation 2-30
2.2.7.3 Heating Element 2-30
2.2.7.4 Preparation for Start-up 2-30
2.2.8 Controller 2-31
2.2.9 Bus Extension to S100 I/O 2-33
2.2.10 S100 I/O 2-35
2.2.11 S800 I/O and S400 I/O 2-38
2.2.12 Peripheral Units 2-38
2.2.12.1 Printer 2-40
2.2.13 Communication 2-42
2.2.14 Engineering Station 2-43
2.2.15 Checklists 2-43
2.2.15.1 Grounding Philosophy, Earthing Line System 2-43
2.2.15.2 Process Cabling, Shielding, Grounding, Maximum Length 2-44
2.2.15.3 Supply 2-45
2.2.15.4 Lightning Protection 2-45
2.2.15.5 Subrack, Connection Unit, Circuit Board 2-46
2.2.15.6 Cabinets, Internal Cables 2-47
2.2.15.7 External Cables 2-47
2.2.15.8 Communication, Communication Cables 2-48
2.2.15.9 Miscellaneous 2-49
2.2.16 Final Procedures Before Start-up 2-49
2.3 Shut-down Procedures 2-49
2.3.1 Safety Regulations 2-49
2.3.2 Controller and I/O 2-50
2.3.3 Peripheral Equipment 2-52
2.4 Start-up Procedures 2-52
2.4.1 Safety Regulations 2-53
2.4.2 Controller and I/O 2-53
2.4.2.1 Power-up 2-54
2.4.2.2 Initialization 2-56
2.4.2.3 Connection of Engineering Station 2-56
2.4.2.4 Controller System Configuration 2-57

2.4.2.5 Configuration/Application Building 2-63
2.4.2.6 Dumping and Loading 2-63
2.4.2.7 Summary of the Controller Start-up and Verification of the Start 2-65
2.4.2.8 Installation of Battery for Backup of Memory 2-66
2.4.3 Peripheral Equipment 2-66
2.4.3.1 Printer 2-67
2.5 Product Verification 2-68
2.5.1 Safety Regulations 2-69
2.5.2 Servicing Tool 2-69
2.5.3 Commissioning 2-69
2.5.3.1 General 2-69
2.5.3.2 Procedure 2-69
2.5.3.3 Modify Permission 2-70
2.5.3.4 Blocking and Deblocking of the PC Program 2-70
2.5.3.5 List of some Test Facilities provided by the Engineering Station 2-71
2.5.3.6 Tuning of Feedback Control Loops 2-72
2.5.3.7 Use of PC Programming During Operation when Commissioning 2-72
2.5.3.8 Listing of Executing Unit Status 2-73
2.5.3.9 Check of Process Input/Output System 2-73
2.5.3.10 Listing of PC Program and Data Base 2-77
2.5.4 Final Control 2-79
2.6 Implementation of Functions in Systems Already Operating 2-79
2.6.1 Servicing Tool 2-80
2.6.2 Safety Regulations 2-80
2.6.3 General Guidelines 2-80
2.6.4 Additional I/O Boards 2-83
2.6.5 Extension with Redundant Processor Module 2-87
2.6.6 Enlargement of the System Software 2-89
2.6.7 Power-up Ahead of Program Loading 2-91

Chapter 3 - Configuration/Application Building

3.1 Design Considerations 3-1
3.1.1 Product Structure 3-1
3.1.2 General System Utilities 3-1
3.1.2.1 System Clock 3-2
3.1.2.2 Run/Alarm Relay 3-2
3.1.2.3 Additional Supervisory Inputs 3-3

3.1.2.4 Backup of Application Program 3-4
3.1.3 Power Supply 3-4
3.1.4 Process Interface 3-10
3.1.4.1 S100 I/O System 3-13
3.1.4.2 S400 I/O System 3-19
3.1.4.3 S800 I/O System 3-21
3.1.5 Communication 3-21
3.1.5.1 Provided Link Types 3-21
3.1.5.2 Applied Communication 3-25
3.1.6 Process Control 3-27
3.1.6.1 Application Building with AMPL 3-28
3.1.7 Operator's Interface 3-29
3.1.7.1 Local Operator 3-29
3.1.7.2 Central Operator 3-29
3.1.8 Availability and Security 3-30
3.1.8.1 Redundancy 3-31
3.1.9 Mechanics 3-31
3.1.10 Heat Dissipation 3-32
3.1.10.1 Cabinet Ventilation 3-32
3.1.10.2 Heat Dissipation Permitted in Cabinets 3-32
3.1.10.3 Cabinets in Groups 3-33
3.1.10.4 Calculation of Heat Generated in a Cabinet 3-33
3.1.11 Maintenance and Repair 3-34
3.1.12 Expansion Possibilities and Spare Considerations 3-34
3.1.13 Memory Calculation 3-35
3.1.14 CPU-optimization, Load Calculation 3-39
3.2 Technical Data Including Capacity & Performance 3-44
3.2.1 General System Utilities 3-44
3.2.1.1 CPU 3-44
3.2.1.2 Redundant Processor Modules 3-58
3.2.1.3 Memory 3-58
3.2.1.4 System Clock 3-59
3.2.2 Power Supply 3-60
3.2.3 Process Interface 3-60
3.2.3.1 General Technical Data, Capacity 3-60
3.2.3.2 S100 I/O 3-63
3.2.3.3 S400 I/O 3-64
3.2.3.4 S800 I/O 3-64
3.2.4 Communication 3-65
3.2.4.1 Provided Link Types 3-65

3.2.4.2 Applied Communication 3-66
3.2.5 Process Control 3-67
3.2.5.1 Logging 3-68
3.2.6 Operator's Interface 3-69
3.2.6.1 Local Operator Station 3-69
3.2.6.2 Central Operator Station 3-69
3.2.6.3 Printer 3-69
3.2.7 Availability 3-70
3.3 Application Start-up 3-71
3.4 Tutorial 3-71
3.4.1 Introduction to the Design 3-71
3.4.2 Design Procedures 3-72
3.4.2.1 System Definition 3-72
3.4.2.2 Configuration/Application Building 3-73
3.5 Application Procedures 3-76
3.6 Configuration/Application Building Menus 3-76

Chapter 4 - Runtime Operation

4.1 Product Operation 4-1
4.1.1 Working Modes 4-1
4.1.2 Ordering Working Modes 4-2
4.1.3 Start Modes 4-2
4.1.4 Primary and Backup Processor Module 4-3
4.1.5 Relations between Start Modes and Working Modes 4-4
4.1.5.1 First Power-up 4-5
4.1.5.2 Power-up and Initialization of Controller which Contains Application 4-6
4.1.6 Relations between Engineering Station Commands and Working Modes 4-7
4.1.6.1 DICONFIG 4-8
4.1.6.2 ECONFIG 4-9
4.1.6.3 RECONFIG 4-10
4.1.7 Programmed Start 4-11
4.1.8 System Program 4-15
4.1.8.1 Operating System 4-17
4.1.8.2 Process Communication 4-18
4.1.8.3 Diagnostics for the System Program 4-18
4.1.9 Application Program 4-19
4.1.9.1 Data Base 4-19
4.1.9.2 Data Area for PC Programs 4-20

4.1.9.3 PC Program 4-20
4.1.10 Execution 4-21
4.1.10.1 Interpreter 4-21
4.1.10.2 Execution Sequence within an Execution Unit 4-23
4.1.10.3 Sequence of Execution of Execution Units 4-23
4.1.10.4 Execution Sequence for an Individual PC Element 4-24
4.1.10.5 Execution Sequence of PC Elements 4-25
4.1.10.6 Resetting Execution 4-25
4.1.10.7 Scanning of Process Inputs 4-25
4.1.11 Data Transport 4-26
4.1.11.1 Reading-in Phase 4-26
4.1.11.2 Reading-out Phase 4-27
4.1.11.3 Data Transport between Execution Units 4-28
4.1.12 Initialization of Process Communication 4-29
4.1.13 Diagnostics 4-30
4.2 Operating Overview 4-30
4.3 Runtime Tutorial 4-30
4.4 Operating Instructions 4-30
4.5 Runtime Operation Menus 4-30

Chapter 5 - Maintenance

5.1 Preventive Maintenance 5-1
5.1.1 Safety Regulations 5-1
5.1.1.1 Personnel and Process Safety 5-1
5.2 Preventive Maintenance 5-2
5.2.1 Safety Regulations 5-2
5.2.1.1 Personnel and Process Safety 5-2
5.2.1.2 Machine Safety 5-3
5.2.2 Visual Inspection 5-4
5.2.3 Safety 5-4
5.2.4 Cleanliness 5-4
5.2.5 Air Filter 5-4
5.2.6 Backup Batteries 5-4
5.2.7 Forced Cooling 5-4
5.3 Hardware Indicators 5-4
5.4 Error Messages 5-5
5.4.1 Halt Codes 5-5
5.4.1.1 Reading of Halt Codes 5-5
5.4.2 System Messages 5-5
5.4.2.1 Reading of System Messages 5-6

5.5 Fault Finding and User Repair 5-6
5.5.1 Introduction 5-6
5.5.2 Diagnostics and Fault Announcement 5-7
5.5.2.1 System Status and Plain Language System Messages 5-9
5.5.3 Fault Finding Principles 5-34
5.5.4 Fault Classification and Scheme of Measures 5-37
5.5.5 Test Equipment 5-37
5.5.6 Safety Regulations 5-38
5.5.7 On-line/Off-line Aspects 5-38
5.5.8 Connection of Engineering Station 5-39
5.5.9 List of General Fault Finding Procedures and Hints 5-40
5.5.9.1 Location of Malfunction 5-40
5.5.9.2 External Factors 5-40
5.5.9.3 Safety at Start/Stop 5-40
5.5.9.4 Manual Changeover between Redundant Processor Modules 5-40
5.5.9.5 Check of Power Supply 5-41
5.5.9.6 Check of Backup Power Supply 5-49
5.5.9.7 Check of Processor Module 5-49
5.5.9.8 I/O 5-50
5.5.9.9 Fault Finding by Reducing the System 5-51
5.5.10 User Repair 5-53
5.5.10.1 Board and Subrack Mounted Unit Exchange 5-53
5.5.10.2 Replacement of Redundant Processor Module 5-66
5.5.10.3 Replacement of Redundant S100 I/O Bus Extenders 5-66
5.5.10.4 Replacement of Power Supply Unit 5-68
5.5.10.5 Replacement of 5 V Regulator 5-69
5.5.10.6 Replacement of Backup Power Supply 5-72
5.5.10.7 Battery Exchange 5-72
5.5.10.8 Replacement of Connection Unit 5-73
5.5.10.9 Replacement of Modem 5-74
5.5.11 Adjustment of Analog Input and Output Boards 5-74
5.5.11.1 Channel Adjustment on DSAI 130 5-75
5.5.11.2 Adjustment of A/D Converter 5-77
5.5.12 Channel Adjustment on AO Board 5-79
5.5.12.1 Adjustment of Zero Point, Channel by Channel 5-80
5.5.12.2 Adjustment of the Gain, Channel by Channel 5-81
5.5.12.3 Adjustment of Variable Gain, Channel by Channel 5-81
5.5.12.4 Adjustment of "Limit Low" L1 and "Limit High" L2, Channel by Channel 5-81

5.5.13 Adjustment of Isolation Amplifier 5-82
5.5.14 Adjustment of Reference Voltage. 5-82
5.5.15 System Restart following Maintenance Activities 5-82
5.5.16 System Restart, INIT 5-83
5.5.17 Loading of Application Program 5-84
5.6 CPU Load Measurement 5-86
5.7 Backup 5-86
5.7.1 Backup of System 5-86
5.7.2 Backup of Application 5-86
5.8 System Upgrade 5-88

Appendix A - Hardware Modules

A.1 List of Hardware Modules A-1
A.2 CI531 - RS-232-C Communication Interface A-6
A.3 DSSB 170 - Energy Reservoir A-8
A.4 MB510 - Program Card Interface A-10
A.5 PM511V - Processor Module A-12
A.6 RB5xx - Dummy Modules A-14
A.7 RC527 - Fan Unit A-15
A.8 RF533 - Controller Subrack 12 SU A-17
A.9 RF540, RF541 - Modem Subrack A-20
A.10 SA1xx - Power Supply Units A-22
A.11 SB510 - Backup Power Supply 110-230 V a.c/d.c. A-25
A.12 SB511 - Backup Power Supply 24-48 V d.c. A-28
A.13 SB522 - Battery Unit A-30
A.14 SC5x0 Submodule Carriers A-32
A.15 SD150 - d.c./d.c. Converter A-34
A.16 SR511 - Regulator 24 V/5 V A-36
A.17 Power Switch and Distribution Units A-38
A.18 SX554 - Distribution Unit 60 V d.c. A-44
A.19 TC520 - System Status Collector A-46

Appendix B - RM500 Cabinet - Data Sheet

B.1 RM500 Cabinets - General B-1
B.2 Dimensions and Weight B-2
B.3 Mounting Cabinets together B-4
B.4 Mounting Cabinets to the Floor B-4
B.5 Protection Rating B-5
B.6 Permitted Power Dissipation B-6

Appendix C - Delivery Documentation

C.1 Delivery Binder Content C-1

Appendix D - Item Designations

D.1 General D-1
D.2 Cabinet D-1
D.3 Controller Subracks D-3
D.4 I/O Subracks D-5
D.5 Modem Subracks D-6
D.6 Circuit Boards and Units D-7
D.7 Mains Units D-9
D.8 Examples of Item Designation in Cabinets D-10

Appendix E - Current Consumption and Heat Dissipation

E.1 General E-1
E.2 Calculation Algorithms and Forms with Technical Data E-1

Appendix F - Load Calculation

F.1 Load Calculation Forms F-1

Appendix G - Memory Calculation

G.1 Form for Memory Calculation G-1

Appendix H - Halt Codes

H.1 Example of Halt Code Printout H-1
H.2 List of Halt Codes and Corrective Actions H-1

Appendix I - System Messages

I.1 Message Coding I-1
I.2 Message Types I-2
I.3 List of System Messages and Corrective Actions I-3

Appendix J - Hexadecimal to Decimal Representation

J.1 Conversion Guide J-1

ILLUSTRATIONS

Figure 1-1. Example of Advanced Control System with Advant Controller 450 1-1
Figure 1-2. Basic Documentation Structure 1-2
Figure 1-3. Cabinet for Advant Controller 400 Series, RM500, in a Front View 1-16
Figure 1-4. Advant Controller 450 in RM500 Cabinet (doors opened) - Example of Physical Appearance 1-17
Figure 1-5. Example of PC Element (AND, TON, SHIFT) 1-18

Figure 1-6. Example of Version Designation with Compatibility Codes for Basic Software 1-19
Figure 1-7. Example of Advant Controller 450 Hardware Configuration incl. a Variant of Process I/O 1-21
Figure 1-8. Advant Controller 450 Block Diagram 1-22
Figure 1-9. Advant Controller 450 Functional Interfaces 1-23
Figure 1-10. Location of System Program Card (PCMCIA) 1-25
Figure 1-11. Location of Additional Program Cards 1-26
Figure 1-12. Principle of Power Supply of an Advant Controller 450 (a.c. mains supply) 1-38
Figure 1-13. Principle of Redundant Power Supply of an Advant Controller 450 (a.c. mains supply) 1-39
Figure 1-14. Voltage Regulation in Controller Subrack 1-42
Figure 1-15. Voltage Regulation in I/O Subrack 1-43
Figure 1-16. Input and Output Signal Paths (in principle) 1-47
Figure 1-17. Input and Output Signal Paths (in principle) 1-48
Figure 1-18. Example of Connection Unit for S100 I/O 1-49
Figure 1-19. Application of Object Oriented Connection of S100 I/O 1-50
Figure 1-20. Principle of HART Implementation 1-52
Figure 1-21. Principle of HART implementation using S800 I/O 1-53
Figure 1-22. Digital Input Signal, Block Diagram 1-56
Figure 1-23. Digital Output Signal, Block Diagram 1-58
Figure 1-24. Analog Input Signal, Block Diagram 1-62
Figure 1-25. Analog Input/Output Signal with Redundancy, Block Diagram 1-62
Figure 1-26. Analog Output Signal, Block Diagram 1-65
Figure 1-27. Pulse Counter Input Signal DSDP 110, Block Diagram 1-66
Figure 1-28. Pulse Counter Input Signal DSDP 150, Block Diagram 1-66
Figure 1-29. Example of basic I/O Unit, DSDX 452 - 20 Inputs and 12 Outputs 1-68
Figure 1-30. S800 I/O. Field Communication Interface with an I/O module on a Compact or Extended MTU. 1-70
Figure 1-31. Example of Electrical Redundant Bus Extension 1-81
Figure 1-32. Example including Non-redundant Optical Bus Extension 1-82
Figure 1-33. Example of Physical Configuration of Non-redundant MasterFieldbus and S400 I/O Units 1-83
Figure 1-34. A non-redundant Advant Fieldbus 100 Configuration using Coaxial Media 1-84
Figure 1-35. A redundant Advant Fieldbus 100 Configuration using Twisted pair Media 1-85
Figure 1-36. Media Conversion in Advant Fieldbus 100 1-85
Figure 1-37. PROFIBUS-DP configuration example 1-86
Figure 1-38. LONWORKS network configuration example 1-87

Figure 1-39. Alternative Connections of an External Computer to Advant Controllers. 1-88
Figure 1-40. Example of Automatic AMPL Document Printout 1-93
Figure 1-41. Process Objects Implemented as User Defined PC Elements 1-94
Figure 1-42. Simple Control Function Realized in AMPL 1-95
Figure 1-43. Principle of a Functional Unit Application..... 1-96
Figure 1-44. Example of Simple Report..... 1-99
Figure 1-45. AC 400 configuration with drives 1-102
Figure 1-46. VT100 Terminal and Keyboard for MasterView 320 1-105
Figure 1-47. Communication, Operator Station-Controller-Process..... 1-106
Figure 1-48. Network Communication, Alternative Module Arrangement 1-114
Figure 1-49. Arrangement of Redundant I/O Modules 1-116
Figure 1-50. Cabinet, type RM500..... 1-117
Figure 1-51. Typical Cabinet minimum Configuration, Redundant Power Supply 1-119
Figure 1-52. Advant Controller 450, Controller Subrack 9S 1-120
Figure 1-53. Front of I/O Subrack..... 1-121
Figure 1-54. I/O Subrack Configuration..... 1-122
Figure 1-55. Carrier Module and Submodule Mechanics 1-123
Figure 2-1. Standard Central Cabinet Configuration (maximum)..... 2-5
Figure 2-2. Distributed Location of S100 I/O Cabinets (Example of Cabinet Configuration)..... 2-6
Figure 2-3. S100 I/O with Object Oriented Connection Units (Example of Cabinet Configuration)..... 2-7
Figure 2-4. Grounding of Electronic Equipment..... 2-8
Figure 2-5. Connections with Multi-core Cable and Coupling Boxes 2-12
Figure 2-6. Minimum Distance to the Walls and the Ceiling..... 2-14
Figure 2-7. Warning Label regarding ESD..... 2-17
Figure 2-8. Handling of Process I/O Cable Shields in a CE-marked Cabinet..... 2-20
Figure 2-9. Handling of Cable Shields in a not CE-marked Cabinet 2-21
Figure 2-10. Principles of Grounding of Communication Cable Shields in a CE-marked Design 2-22
Figure 2-11. Communication Cable Shield Grounded by Capacitor and Ferrite Coil 2-23
Figure 2-12. Grounding of Cable Shield, Connection Unit - I/O Board 2-24
Figure 2-13. Individual Grounding of Process Signal..... 2-26
Figure 2-14. Assigned Space for Cables in a Cabinet 2-27
Figure 2-15. Plant Cable Routing in OOCU Cabinet 2-28
Figure 2-16. Main Principle of Power Supply Connection and Distribution 2-29
Figure 2-17. Connection of Run /Alarm Relay 2-31
Figure 2-18. Connection of External Clock Synchronization 2-32
Figure 2-19. Connection of Additional Supervisory Inputs 2-32
Figure 2-20. Example of Bus Extension..... 2-34

Figure 2-21. Supply of Peripheral Unit without Modem 2-39
Figure 2-22. Short Distance Connection of Printer 2-40
Figure 2-23. Long-distance Connection of Printer 2-41
Figure 2-24. Connections and Grounding of Communication Cable Shields 2-41
Figure 2-25. Power-up, Circuit Breakers and Positive Indications 2-56
Figure 2-26. Controller System Configuration in a Broad Outline 2-58
Figure 2-27. "Modify Permission" in a Control Module 2-70
Figure 2-28. Principal Block Diagram of S100 I/O Input Channel, Test Points 2-74
Figure 2-29. Principal Block Diagram of S100 I/O Output Channel, Test Points 2-76
Figure 2-30. Graphic Diagram 2-78
Figure 2-31. Program List 2-78
Figure 2-32. Grounding of Connection Units 2-84
Figure 2-33. I/O Subrack 2-85
Figure 3-1. External Synchronization of System Clock 3-2
Figure 3-2. Run/Alarm Relay Connection 3-2
Figure 3-3. Connection of Additional Supervisory Inputs 3-3
Figure 3-4. Power Supply Terminal Settings 3-3
Figure 3-5. Examples of Distribution Board Fusing, d.c. 3-9
Figure 3-6. Reduction Factors for Cabinets Installed in Groups 3-33
Figure 3-7. Advant Controller 450 Priority System 3-40
Figure 3-8. CPU Load Calculation Methods 3-42
Figure 3-9. Load from Cyclic Functions, Overview 3-45
Figure 3-10. Load Caused by Subscription 3-50
Figure 3-11. Load Caused by Sending Data Set (MasterBus 300) 3-51
Figure 3-12. Load Caused by Receiving Data Set (MasterBus 300) 3-52
Figure 3-13. Load Caused by a MasterView 320 3-52
Figure 3-14. Load Caused by a Log (Short Intervals) 3-53
Figure 3-15. Load Caused by a Log (Medium Intervals) 3-54
Figure 3-16. Load Caused by DSP with Advant Fieldbus 100, Basic Cycle Time 32 ms 3-55
Figure 3-17. Load Caused by DSP with Advant Fieldbus 100, Basic Cycle Time 512 ms 3-55
Figure 3-18. Load Caused by EXCOM, 1200 bit/sec. 3-56
Figure 3-19. Load Caused by EXCOM, 9600 bit/sec. 3-57
Figure 3-20. Load Caused by EXCOM, 19200 bit/sec. 3-57
Figure 3-21. Structuring Limits 3-68
Figure 3-22. Example of Designations in a Feedback Control Loop 3-74
Figure 4-1. Start Mode Selector 4-2
Figure 4-2. First Power-up 4-5
Figure 4-3. Power-up of Controller which Contains Application 4-6

Figure 4-4. Working Mode Caused by DICONFIG 4-8
Figure 4-5. Working Mode Caused by ECONFIG 4-9
Figure 4-6. Working Mode Caused by RECONFIG 4-10
Figure 4-7. Programmed Start at Power-fail - Power-up 4-12
Figure 4-8. Programmed Start at AUTO - ENTER 4-13
Figure 4-9. Programmed Start at DICONFIG 4-14
Figure 4-10. Advant Controller 450 - Survey of Software System 4-16
Figure 4-11. Survey of Processor Module and Operating System 4-17
Figure 4-12. Example of PC Element: FUNG-1V 4-20
Figure 4-13. Example of Function Performed by FUNG-1V 4-21
Figure 4-14. Interpreters 4-22
Figure 4-15. Function consisting of two Execution Units 4-23
Figure 4-16. Order of Execution for PC Elements, AND Gate with two Inputs 4-24
Figure 4-17. Printout from the Command LTREE 4-25
Figure 4-18. Example of Reading-in Phase 4-26
Figure 4-19. Example, Reading-out Phase 4-27
Figure 4-20. Data Transport 4-28
Figure 5-1. Warning Label regarding ESD 5-3
Figure 5-2. System Status Display Advant Controller 400 applied to Advant Controller 450 5-9
Figure 5-3. System Status Display, S100 I/O 1 5-22
Figure 5-4. System Status Display, S100 I/O 2 5-23
Figure 5-5. System Status Display, S100 I/O Redundant Board 5-24
Figure 5-6. System Status Display, Fieldbus 5-25
Figure 5-7. System Status Display, Fieldbus 5-26
Figure 5-8. System Status Display, Fieldbus 5-27
Figure 5-9. System Status Display, Advant Fieldbus 100 Bus Unit 5-28
Figure 5-10. System Status Display, MasterFieldbus 5-29
Figure 5-11. System Status Display, S800 I/O Station 5-30
Figure 5-12. System Status Display, S800 I/O Station 5-32
Figure 5-13. System Status Display, S100 I/O Bus Extender 5-33
Figure 5-14. Fault Finding Principles 5-35
Figure 5-15. First Guidance, Scenario A 5-43
Figure 5-16. Fault Finding, B 5-44
Figure 5-17. First Guidance, Scenario C 5-46
Figure 5-18. First Guidance, Scenario D 5-47
Figure 5-19. Fault Finding, Mains Supply and 24 V Power Supply 5-48
Figure 5-20. Check of Backup Power Supply 5-49
Figure 5-21. Connections for Channel by Channel Adjustment of DSAI 130 5-76
Figure 5-22. Adjustment of Voltage Output 5-79

Figure 5-23. Adjustment of Current Output 5-80
Figure B-1. RM500 Cabinet - Front View B-1
Figure B-2. Mounting Cabinets together - Screw Position B-3
Figure B-3. Swing Radius for Door(s) and Hinged Frame B-3
Figure B-4. Position of the Holes for fixing the Cabinet(s) to the Floor B-4
Figure D-1. Item Designation of Mounting Planes D-1
Figure D-2. Cabinet with Door Removed D-2
Figure D-3. Item Designation in Controller Subrack 12 SU D-3
Figure D-4. Item Designation in Controller Subrack 18SU D-4
Figure D-5. Addresses in Controller Subrack 12 SU D-4
Figure D-6. Item Designation in I/O Subrack D-5
Figure D-7. Item Designation in Modem Subrack, 19 inches D-6
Figure D-8. Item Designation in Modem Subrack, 24 inches D-6
Figure D-9. Modem Mounted on a Bracket D-6
Figure D-10. Numbering of Submodules and Connectors on the Front D-7
Figure D-11. Numbering of Connectors on the Rear Side D-7
Figure D-12. Connection Units, Connection and Terminal Numbering D-8
Figure D-13. Location of Connection Units on a Mounting Bar D-8
Figure D-14. Typical Internal Connection D-9
Figure D-15. Terminal Block Numbering D-9
Figure D-16. Location of Mains Units D-9
Figure D-17. Example of general Disposition of a Double Cabinet D-10
Figure H-1. Example of LSYSHI Printout H-1

TABLES

Table 1-1. Related Documentation - Configuration/Application Building 1-6
Table 1-2. Related Documentation - Installation 1-7
Table 1-3. Related Documentation - Optional Functions 1-7
Table 1-4. Related Documentation - Tools 1-9
Table 1-5. PC Elements in the Basic System Program Module QC07-BAS41 1-28
Table 1-6. Functional Units in Program Module QC07-BAS41 1-30
Table 1-7. Additional PC Elements in Program Module QC07-LIB41 1-31
Table 1-8. Additional PC Elements in Program Module QC07-LIB42 1-33
Table 1-9. Functional Units in Program Module QC07-LIB42 1-33
Table 1-10. PC Elements in Optional Program Module QC07-COM41 1-35
Table 1-11. Modules Used in different Power Supply alternatives 1-40
Table 1-12. Selection Guide of Power Supply Modules 1-41
Table 1-13. Digital Input Boards 1-54
Table 1-14. Digital Output Boards 1-57

Table 1-15. Analog Input Boards 1-59
Table 1-16. Analog Output Boards 1-63
Table 1-17. Pulse Counting/Frequency Measurement Boards 1-65
Table 1-18. Positioning Board 1-67
Table 1-19. Converter Connection Board 1-67
Table 1-20. S400 I/O Units 1-69
Table 1-21. Communication Interface Module 1-72
Table 1-22. S800 Digital Modules 1-73
Table 1-23. S800 Analog Modules 1-75
Table 1-24. Pulse Counting / Frequency Measurement Modules 1-76
Table 1-25. S800 Module Termination Units 1-77
Table 1-26. Power Supplies 1-79
Table 1-27. Modulebus Items 1-79
Table 1-28. Communication Survey 1-90
Table 2-1. Methods of Handling Communication Cable Shields 2-23
Table 2-2. Cable Categories in a Cabinet 2-27
Table 2-3. Functional Jumpering 2-37
Table 2-4. Printer Settings 2-42
Table 2-5. Grounding Philosophy, Earthing Line System 2-43
Table 2-6. Process Cabling, Shielding, Grounding, max. Length 2-44
Table 2-7. Supply 2-45
Table 2-8. Lightning Protection 2-45
Table 2-9. Subrack, Connection Unit, Circuit Board 2-46
Table 2-10. Cabinets, Internal Cables 2-47
Table 2-11. Communication, Communication Cables 2-48
Table 2-12. Miscellaneous 2-49
Table 2-13. Function List with an Outline of Controller System Configuration Information. 2-59
Table 2-14. Dump and Load Facilities 2-63
Table 2-15. Situations which Cause Clearing of the RAM 2-64
Table 2-16. Programmable Parameters 2-67
Table 2-17. Cycle Times for Advant Controller 450 2-71
Table 2-18. Implementation of Functions in Systems Already Operating 2-82
Table 3-1. Backup of Application Program, Hardware and Software 3-4
Table 3-2. Rules for the Calculation of Number of Power Supply Units 3-5
Table 3-3. Distribution Board Fusing, a.c. 3-7
Table 3-4. Data to Settle the Distribution Board Fusing, d.c. 3-8
Table 3-5. Requirement on UPS from Voltage Supply Unit SA162 3-10
Table 3-6. Requirement on UPS from Voltage Supply Unit SA168 3-10
Table 3-7. Link Types, Hardware and Software. 3-22

Table 3-8. Applied Communication, Used Links and Interface to Application Program ... 3-25
Table 3-9. Calculation of RAM requirement ... 3-36
Table 3-10. Technical Data of CPU and Memory ... 3-44
Table 3-11. Load from Process I/O Handling ... 3-46
Table 3-12. Example of Execution Times of Digital Signals ... 3-48
Table 3-13. Clock Synchronization, Electrical Data for Minute Pulse ... 3-59
Table 3-14. Estimated System Power Consumption ... 3-60
Table 3-15. Size of Buffer for Event Burst ... 3-61
Table 3-16. Relative Time Errors between Events (DI Signals) ... 3-62
Table 3-17. Capacity S100 I/O ... 3-63
Table 3-18. Capacity S400 I/O ... 3-64
Table 3-19. Capacity S800 I/O ... 3-64
Table 3-20. Provided Link Types, Capacity ... 3-65
Table 3-21. Maximum Numbers, Process Control ... 3-67
Table 3-22. Data Logging Capabilities ... 3-68
Table 3-23. Printer Data which Must be Fulfilled ... 3-70
Table 3-24. Printer Signals, RS-232-C ... 3-70
Table 4-1. Working Modes at Power Up of Redundant Processor Modules ... 4-7
Table 5-1. Replacement Aspects of Individual Board Types (Controller Hardware) ... 5-55
Table 5-2. Replacement Aspects of Individual Board Types, S100 I/O ... 5-59
Table 5-3. Adjustment Possibilities on Analog Circuit Boards ... 5-75
Table 5-4. Full Scale Voltages ... 5-81
Table A-1. List of Hardware Modules ... A-1
Table A-2. Pin Designation for Channel 1 and 2. Connector X4 and X5 ... A-7
Table A-3. DSSB 170, Operating Data ... A-9
Table A-4. SA1xx, Individual Technical Data ... A-23
Table A-5. Fuses in SA1xx ... A-24
Table A-6. SD150, Operating Data ... A-35
Table A-7. Individual Technical Data ... A-39
Table A-8. Electrical Data, Front connected Input/Output Signals ... A-47
Table B-1. RM500 Cabinet Measurements ... B-2
Table B-2. Distances in Figure B-4 ... B-4
Table B-3. RM500 cabinet protection classes ... B-5
Table B-4. Available Degree of Protection Ratings for RM500 ... B-5
Table B-5. Permitted Power Dissipation for RM500 ... B-6
Table D-1. Designation of Items in Figure D-17 ... D-11
Table E-1. Current Consumption and Power Dissipation, Controller Modules ... E-2
Table E-2. Current Consumption and Power Dissipation, S100 I/O Boards ... E-3
Table E-3. Current Consumption and Power Dissipation, Power Supply and Sundry ... E-5

Table F-1. Calculation of CPU-load from S100 and S800 Inputs F-1
Table F-2. Calculation of CPU-load from S100 and S800 Outputs F-2
Table F-3. Calculation of CPU-load from User Defined Type Circuits F-3
Table G-1. Calculation of RAM requirement G-1
Table H-1. List of Halt Codes H-2
Table I-1. System Message Coding I-1
Table I-2. System Message Types I-2
Table I-3. Type 2, Code 46 ..... I-3
Table I-4. Type 5, Code 21 ..... I-3
Table I-5. Type 10, Code 19 ..... I-4
Table I-6. Type 17, Code 1, 2, 3, 7, 8, 9 and 11 ..... I-5
Table I-7. Type 18, Code 8 and 11 ..... I-8
Table I-8. Type 20, Code 1 ..... I-9
Table I-9. Type 22, Code 9, 12, 13 and 20 ..... I-10
Table I-10. Type 26, Code 12 ..... I-12
Table I-11. List of Common Concept Numbers in System Messages I-13
Table I-12. Type 28 ..... I-14
Table I-13. Type 29, Code 1, 2, 3 and 4 ..... I-22
Table I-14. Type 30, Code 21, 23 ..... I-23
Table I-15. Type 39 ..... I-25
Table I-16. Type 134, Code I-27
Table J-1. Conversion of up to Four Figure Hexadecimal Numbers J-2

ILLUSTRATIONS

Figure 1-1. Example of Advanced Control System with Advant Controller 450 1-1
Figure 1-2. Basic Documentation Structure 1-2
Figure 1-3. Cabinet for Advant Controller 400 Series, RM500, in a Front View 1-16
Figure 1-4. Advant Controller 450 in RM500 Cabinet (doors opened) - Example of Physical Appearance 1-17
Figure 1-5. Example of PC Element (AND, TON, SHIFT) 1-18
Figure 1-6. Example of Version Designation with Compatibility Codes for Basic Software 1-19
Figure 1-7. Example of Advant Controller 450 Hardware Configuration incl. a Variant of Process I/O 1-21
Figure 1-8. Advant Controller 450 Block Diagram 1-22
Figure 1-9. Advant Controller 450 Functional Interfaces 1-23
Figure 1-10. Location of System Program Card (PCMCIA) 1-25
Figure 1-11. Location of Additional Program Cards 1-26
Figure 1-12. Principle of Power Supply of an Advant Controller 450 (a.c. mains supply) 1-38
Figure 1-13. Principle of Redundant Power Supply of an Advant Controller 450 (a.c. mains supply) 1-39
Figure 1-14. Voltage Regulation in Controller Subrack 1-42
Figure 1-15. Voltage Regulation in I/O Subrack 1-43
Figure 1-16. Input and Output Signal Paths (in principle) 1-47
Figure 1-17. Input and Output Signal Paths (in principle) 1-48
Figure 1-18. Example of Connection Unit for S100 I/O 1-49
Figure 1-19. Application of Object Oriented Connection of S100 I/O 1-50
Figure 1-20. Principle of HART Implementation 1-52
Figure 1-21. Principle of HART implementation using S800 I/O 1-53
Figure 1-22. Digital Input Signal, Block Diagram 1-56
Figure 1-23. Digital Output Signal, Block Diagram 1-58
Figure 1-24. Analog Input Signal, Block Diagram 1-62
Figure 1-25. Analog Input/Output Signal with Redundancy, Block Diagram 1-62
Figure 1-26. Analog Output Signal, Block Diagram 1-65
Figure 1-27. Pulse Counter Input Signal DSDP 110, Block Diagram 1-66
Figure 1-28. Pulse Counter Input Signal DSDP 150, Block Diagram 1-66
Figure 1-29. Example of basic I/O Unit, DSDX 452 - 20 Inputs and 12 Outputs 1-68
Figure 1-30. S800 I/O. Field Communication Interface with an I/O module on a Compact or Extended MTU. 1-70
Figure 1-31. Example of Electrical Redundant Bus Extension 1-81
Figure 1-32. Example including Non-redundant Optical Bus Extension 1-82
Figure 1-33. Example of Physical Configuration of Non-redundant MasterFieldbus

and S400 I/O Units 1-83
Figure 1-34. A non-redundant Advant Fieldbus 100 Configuration using Coaxial Media 1-84
Figure 1-35. A redundant Advant Fieldbus 100 Configuration using Twisted pair Media 1-85
Figure 1-36. Media Conversion in Advant Fieldbus 100 1-85
Figure 1-37. PROFIBUS-DP configuration example 1-86
Figure 1-38. LONWORKS network configuration example 1-87
Figure 1-39. Alternative Connections of an External Computer to Advant Controllers. 1-88
Figure 1-40. Example of Automatic AMPL Document Printout 1-93
Figure 1-41. Process Objects Implemented as User Defined PC Elements 1-94
Figure 1-42. Simple Control Function Realized in AMPL 1-95
Figure 1-43. Principle of a Functional Unit Application 1-96
Figure 1-44. Example of Simple Report 1-99
Figure 1-45. AC 400 configuration with drives 1-102
Figure 1-46. VT100 Terminal and Keyboard for MasterView 320 1-105
Figure 1-47. Communication, Operator Station-Controller-Process 1-106
Figure 1-48. Network Communication, Alternative Module Arrangement 1-114
Figure 1-49. Arrangement of Redundant I/O Modules 1-116
Figure 1-50. Cabinet, type RM500 1-117
Figure 1-51. Typical Cabinet minimum Configuration, Redundant Power Supply 1-119
Figure 1-52. Advant Controller 450, Controller Subrack 9S 1-120
Figure 1-53. Front of I/O Subrack 1-121
Figure 1-54. I/O Subrack Configuration 1-122
Figure 1-55. Carrier Module and Submodule Mechanics 1-123
Figure 2-1. Standard Central Cabinet Configuration (maximum) 2-5
Figure 2-2. Distributed Location of S100 I/O Cabinets (Example of Cabinet Configuration) 2-6
Figure 2-3. S100 I/O with Object Oriented Connection Units (Example of Cabinet Configuration) 2-7
Figure 2-4. Grounding of Electronic Equipment 2-8
Figure 2-5. Connections with Multi-core Cable and Coupling Boxes 2-12
Figure 2-6. Minimum Distance to the Walls and the Ceiling 2-14
Figure 2-7. Warning Label regarding ESD 2-17
Figure 2-8. Handling of Process I/O Cable Shields in a CE-marked Cabinet 2-20
Figure 2-9. Handling of Cable Shields in a not CE-marked Cabinet 2-21
Figure 2-10. Principles of Grounding of Communication Cable Shields in a CE-marked Design 2-22
Figure 2-11. Communication Cable Shield Grounded by Capacitor and Ferrite Coil 2-23
Figure 2-12. Grounding of Cable Shield, Connection Unit - I/O Board 2-24
Figure 2-13. Individual Grounding of Process Signal 2-26

Figure 2-14. Assigned Space for Cables in a Cabinet 2-27
Figure 2-15. Plant Cable Routing in OOCU Cabinet 2-28
Figure 2-16. Main Principle of Power Supply Connection and Distribution 2-29
Figure 2-17. Connection of Run /Alarm Relay 2-31
Figure 2-18. Connection of External Clock Synchronization 2-32
Figure 2-19. Connection of Additional Supervisory Inputs 2-32
Figure 2-20. Example of Bus Extension 2-34
Figure 2-21. Supply of Peripheral Unit without Modem 2-39
Figure 2-22. Short Distance Connection of Printer 2-40
Figure 2-23. Long-distance Connection of Printer 2-41
Figure 2-24. Connections and Grounding of Communication Cable Shields 2-41
Figure 2-25. Power-up, Circuit Breakers and Positive Indications 2-56
Figure 2-26. Controller System Configuration in a Broad Outline 2-58
Figure 2-27. "Modify Permission" in a Control Module 2-70
Figure 2-28. Principal Block Diagram of S100 I/O Input Channel, Test Points 2-74
Figure 2-29. Principal Block Diagram of S100 I/O Output Channel, Test Points 2-76
Figure 2-30. Graphic Diagram 2-78
Figure 2-31. Program List 2-78
Figure 2-32. Grounding of Connection Units 2-84
Figure 2-33. I/O Subrack 2-85
Figure 3-1. External Synchronization of System Clock 3-2
Figure 3-2. Run/Alarm Relay Connection 3-2
Figure 3-3. Connection of Additional Supervisory Inputs 3-3
Figure 3-4. Power Supply Terminal Settings 3-3
Figure 3-5. Examples of Distribution Board Fusing, d.c. 3-9
Figure 3-6. Reduction Factors for Cabinets Installed in Groups 3-33
Figure 3-7. Advant Controller 450 Priority System 3-40
Figure 3-8. CPU Load Calculation Methods 3-42
Figure 3-9. Load from Cyclic Functions, Overview 3-45
Figure 3-10. Load Caused by Subscription 3-50
Figure 3-11. Load Caused by Sending Data Set (MasterBus 300) 3-51
Figure 3-12. Load Caused by Receiving Data Set (MasterBus 300) 3-52
Figure 3-13. Load Caused by a MasterView 320 3-52
Figure 3-14. Load Caused by a Log (Short Intervals) 3-53
Figure 3-15. Load Caused by a Log (Medium Intervals) 3-54
Figure 3-16. Load Caused by DSP with Advant Fieldbus 100, Basic Cycle Time 32 ms 3-55
Figure 3-17. Load Caused by DSP with Advant Fieldbus 100, Basic Cycle Time 512 ms 3-55
Figure 3-18. Load Caused by EXCOM, 1200 bit/sec. 3-56

Figure 3-19. Load Caused by EXCOM, 9600 bit/sec. 3-57
Figure 3-20. Load Caused by EXCOM, 19200 bit/sec. 3-57
Figure 3-21. Structuring Limits..... 3-68
Figure 3-22. Example of Designations in a Feedback Control Loop..... 3-74
Figure 4-1. Start Mode Selector 4-2
Figure 4-2. First Power-up 4-5
Figure 4-3. Power-up of Controller which Contains Application 4-6
Figure 4-4. Working Mode Caused by DICONFIG 4-8
Figure 4-5. Working Mode Caused by ECONFIG..... 4-9
Figure 4-6. Working Mode Caused by RECONFIG 4-10
Figure 4-7. Programmed Start at Power-fail - Power-up 4-12
Figure 4-8. Programmed Start at AUTO - ENTER..... 4-13
Figure 4-9. Programmed Start at DICONFIG..... 4-14
Figure 4-10. Advant Controller 450 - Survey of Software System..... 4-16
Figure 4-11. Survey of Processor Module and Operating System..... 4-17
Figure 4-12. Example of PC Element: FUNG-1V 4-20
Figure 4-13. Example of Function Performed by FUNG-1V 4-21
Figure 4-14. Interpreters..... 4-22
Figure 4-15. Function consisting of two Execution Units 4-23
Figure 4-16. Order of Execution for PC Elements, AND Gate with two Inputs 4-24
Figure 4-17. Printout from the Command LTREE..... 4-25
Figure 4-18. Example of Reading-in Phase 4-26
Figure 4-19. Example, Reading-out Phase..... 4-27
Figure 4-20. Data Transport 4-28
Figure 5-1. Warning Label regarding ESD 5-3
Figure 5-2. System Status Display Advant Controller 400 applied to Advant Controller 450..... 5-9
Figure 5-3. System Status Display, S100 I/O 1..... 5-22
Figure 5-4. System Status Display, S100 I/O 2..... 5-23
Figure 5-5. System Status Display, S100 I/O Redundant Board..... 5-24
Figure 5-6. System Status Display, Fieldbus..... 5-25
Figure 5-7. System Status Display, Fieldbus..... 5-26
Figure 5-8. System Status Display, Fieldbus..... 5-27
Figure 5-9. System Status Display, Advant Fieldbus 100 Bus Unit 5-28
Figure 5-10. System Status Display, MasterFieldbus 5-29
Figure 5-11. System Status Display, S800 I/O Station 5-30
Figure 5-12. System Status Display, S800 I/O Station 5-32
Figure 5-13. System Status Display, S100 I/O Bus Extender 5-33
Figure 5-14. Fault Finding Principles 5-35
Figure 5-15. First Guidance, Scenario A..... 5-43

Figure 5-16. Fault Finding, B 5-44
Figure 5-17. First Guidance, Scenario C 5-46
Figure 5-18. First Guidance, Scenario D 5-47
Figure 5-19. Fault Finding, Mains Supply and 24 V Power Supply 5-48
Figure 5-20. Check of Backup Power Supply 5-49
Figure 5-21. Connections for Channel by Channel Adjustment of DSAI 130 5-76
Figure 5-22. Adjustment of Voltage Output 5-79
Figure 5-23. Adjustment of Current Output 5-80
Figure B-1. RM500 Cabinet - Front View B-1
Figure B-2. Mounting Cabinets together - Screw Position B-3
Figure B-3. Swing Radius for Door(s) and Hinged Frame B-3
Figure B-4. Position of the Holes for fixing the Cabinet(s) to the Floor B-4
Figure D-1. Item Designation of Mounting Planes D-1
Figure D-2. Cabinet with Door Removed D-2
Figure D-3. Item Designation in Controller Subrack 12 SU D-3
Figure D-4. Item Designation in Controller Subrack 18SU D-4
Figure D-5. Addresses in Controller Subrack 12 SU D-4
Figure D-6. Item Designation in I/O Subrack D-5
Figure D-7. Item Designation in Modem Subrack, 19 inches D-6
Figure D-8. Item Designation in Modem Subrack, 24 inches D-6
Figure D-9. Modem Mounted on a Bracket D-6
Figure D-10. Numbering of Submodules and Connectors on the Front D-7
Figure D-11. Numbering of Connectors on the Rear Side D-7
Figure D-12. Connection Units, Connection and Terminal Numbering D-8
Figure D-13. Location of Connection Units on a Mounting Bar D-8
Figure D-14. Typical Internal Connection D-9
Figure D-15. Terminal Block Numbering D-9
Figure D-16. Location of Mains Units D-9
Figure D-17. Example of general Disposition of a Double Cabinet D-10
Figure H-1. Example of LSYSHI Printout H-1

TABLES

Table 1-1. Related Documentation - Configuration/Application Building 1-6
Table 1-2. Related Documentation - Installation 1-7
Table 1-3. Related Documentation - Optional Functions 1-7
Table 1-4. Related Documentation - Tools 1-9
Table 1-5. PC Elements in the Basic System Program Module QC07-BAS41 1-28
Table 1-6. Functional Units in Program Module QC07-BAS41 1-30
Table 1-7. Additional PC Elements in Program Module QC07-LIB41 1-31
Table 1-8. Additional PC Elements in Program Module QC07-LIB42 1-33
Table 1-9. Functional Units in Program Module QC07-LIB42 1-33
Table 1-10. PC Elements in Optional Program Module QC07-COM41 1-35
Table 1-11. Modules Used in different Power Supply alternatives 1-40
Table 1-12. Selection Guide of Power Supply Modules 1-41
Table 1-13. Digital Input Boards 1-54
Table 1-14. Digital Output Boards 1-57
Table 1-15. Analog Input Boards 1-59
Table 1-16. Analog Output Boards 1-63
Table 1-17. Pulse Counting/Frequency Measurement Boards 1-65
Table 1-18. Positioning Board 1-67
Table 1-19. Converter Connection Board 1-67
Table 1-20. S400 I/O Units 1-69
Table 1-21. Communication Interface Module 1-72
Table 1-22. S800 Digital Modules 1-73
Table 1-23. S800 Analog Modules 1-75
Table 1-24. Pulse Counting / Frequency Measurement Modules 1-76
Table 1-25. S800 Module Termination Units 1-77
Table 1-26. Power Supplies 1-79
Table 1-27. Modulebus Items 1-79
Table 1-28. Communication Survey 1-90
Table 2-1. Methods of Handling Communication Cable Shields 2-23
Table 2-2. Cable Categories in a Cabinet 2-27
Table 2-3. Functional Jumpering 2-37
Table 2-4. Printer Settings 2-42
Table 2-5. Grounding Philosophy, Earthing Line System 2-43
Table 2-6. Process Cabling, Shielding, Grounding, max. Length 2-44
Table 2-7. Supply 2-45
Table 2-8. Lightning Protection 2-45
Table 2-9. Subrack, Connection Unit, Circuit Board 2-46
Table 2-10. Cabinets, Internal Cables 2-47

Table 2-11. Communication, Communication Cables 2-48
Table 2-12. Miscellaneous 2-49
Table 2-13. Function List with an Outline of Controller System Configuration Information. 2-59
Table 2-14. Dump and Load Facilities 2-63
Table 2-15. Situations which Cause Clearing of the RAM 2-64
Table 2-16. Programmable Parameters 2-67
Table 2-17. Cycle Times for Advant Controller 450 2-71
Table 2-18. Implementation of Functions in Systems Already Operating 2-82
Table 3-1. Backup of Application Program, Hardware and Software 3-4
Table 3-2. Rules for the Calculation of Number of Power Supply Units 3-5
Table 3-3. Distribution Board Fusing, a.c 3-7
Table 3-4. Data to Settle the Distribution Board Fusing, d.c. 3-8
Table 3-5. Requirement on UPS from Voltage Supply Unit SA162 3-10
Table 3-6. Requirement on UPS from Voltage Supply Unit SA168 3-10
Table 3-7. Link Types, Hardware and Software. 3-22
Table 3-8. Applied Communication, Used Links and Interface to Application Program 3-25
Table 3-9. Calculation of RAM requirement 3-36
Table 3-10. Technical Data of CPU and Memory 3-44
Table 3-11. Load from Process I/O Handling 3-46
Table 3-12. Example of Execution Times of Digital Signals 3-48
Table 3-13. Clock Synchronization, Electrical Data for Minute Pulse 3-59
Table 3-14. Estimated System Power Consumption 3-60
Table 3-15. Size of Buffer for Event Burst 3-61
Table 3-16. Relative Time Errors between Events (DI Signals) 3-62
Table 3-17. Capacity S100 I/O 3-63
Table 3-18. Capacity S400 I/O 3-64
Table 3-19. Capacity S800 I/O 3-64
Table 3-20. Provided Link Types, Capacity 3-65
Table 3-21. Maximum Numbers, Process Control 3-67
Table 3-22. Data Logging Capabilities 3-68
Table 3-23. Printer Data which Must be Fulfilled 3-70
Table 3-24. Printer Signals, RS-232-C 3-70
Table 4-1. Working Modes at Power Up of Redundant Processor Modules 4-7
Table 5-1. Replacement Aspects of Individual Board Types (Controller Hardware) .. 5-55
Table 5-2. Replacement Aspects of Individual Board Types, S100 I/O 5-59
Table 5-3. Adjustment Possibilities on Analog Circuit Boards 5-75
Table 5-4. Full Scale Voltages 5-81
Table A-1. List of Hardware Modules A-1

Table A-2. Pin Designation for Channel 1 and 2. Connector X4 and X5 ..... A-7
Table A-3. DSSB 170, Operating Data A-9
Table A-4. SA1xx, Individual Technical Data A-23
Table A-5. Fuses in SA1xx A-24
Table A-6. SD150, Operating Data A-35
Table A-7. Individual Technical Data A-39
Table A-8. Electrical Data, Front connected Input/Output Signals A-47
Table B-1. RM500 Cabinet Measurements B-2
Table B-2. Distances in Figure B-4 ..... B-4
Table B-3. RM500 cabinet protection classes B-5
Table B-4. Available Degree of Protection Ratings for RM500 ..... B-5
Table B-5. Permitted Power Dissipation for RM500 ..... B-6
Table D-1. Designation of Items in Figure D-17 ..... D-11
Table E-1. Current Consumption and Power Dissipation, Controller Modules E-2
Table E-2. Current Consumption and Power Dissipation, S100 I/O Boards E-3
Table E-3. Current Consumption and Power Dissipation, Power Supply and Sundry E-5
Table F-1. Calculation of CPU-load from S100 and S800 Inputs F-1
Table F-2. Calculation of CPU-load from S100 and S800 Outputs F-2
Table F-3. Calculation of CPU-load from User Defined Type Circuits F-3
Table G-1. Calculation of RAM requirement G-1
Table H-1. List of Halt Codes H-2
Table I-1. System Message Coding I-1
Table I-2. System Message Types I-2
Table I-3. Type 2, Code 46 ..... I-3
Table I-4. Type 5, Code 21 ..... I-3
Table I-5. Type 10, Code 19 ..... I-4
Table I-6. Type 17, Code 1, 2, 3, 7, 8, 9 and 11 ..... I-5
Table I-7. Type 18, Code 8 and 11 ..... I-8
Table I-8. Type 20, Code 1 ..... I-9
Table I-9. Type 22, Code 9, 12, 13 and 20 ..... I-10
Table I-10. Type 26, Code 12 ..... I-12
Table I-11. List of Common Concept Numbers in System Messages I-13
Table I-12. Type 28 ..... I-14
Table I-13. Type 29, Code 1, 2, 3 and 4 ..... I-22
Table I-14. Type 30, Code 21, 23 ..... I-23
Table I-15. Type 39 ..... I-25
Table I-16. Type 134, Code I-27
Table J-1. Conversion of up to Four Figure Hexadecimal Numbers J-2

Chapter 1 Introduction

1.1 General Information

Advant OCS is a system for industrial automation. It consists of a family of computer-based units and a local area network for communication.
A controller is a computer-based unit in which control applications are running.

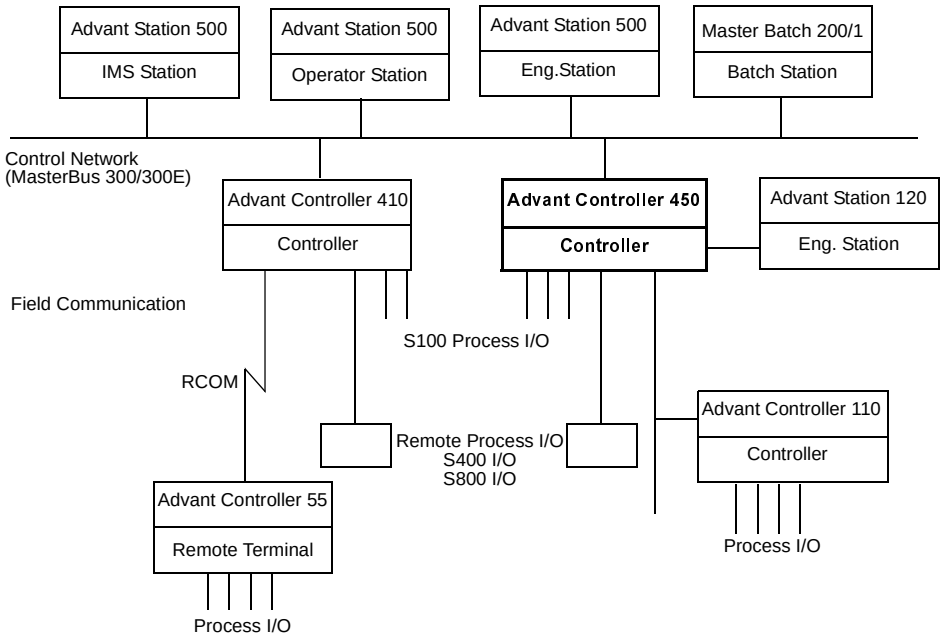

Figure 1-1. Example of Advanced Control System with Advant Controller 450

Advant Controller 450 is a large controller for mixed binary, regulatory and supervisory control. It can be used standing alone, or as an integrated controller in a distributed control system, communicating with other Advant OCS equipment (see Figure 1-1).

This manual is intended primarily for plant designers and commissioning and maintenance personnel, providing them with information about the Advant Controller 450 system, its capabilities and its limitations.
References are made to other manuals when necessary. Section 1.2, Manual Organization provides further details about both this manual and other related manuals.

1.2 Manual Organization

Basic Structure

Figure 1-2 shows the basic structure of the Advant System's various documentation. Each document, whether it is describing and referencing hardware or software, is built around this one structure to make it easy for you to locate related information in any of the documents. Since this one structure is not completely applicable to both hardware and software, certain sections contain only very brief statements in some documents. Small divergences from the standard structure are given in italics in Figure 1-2.

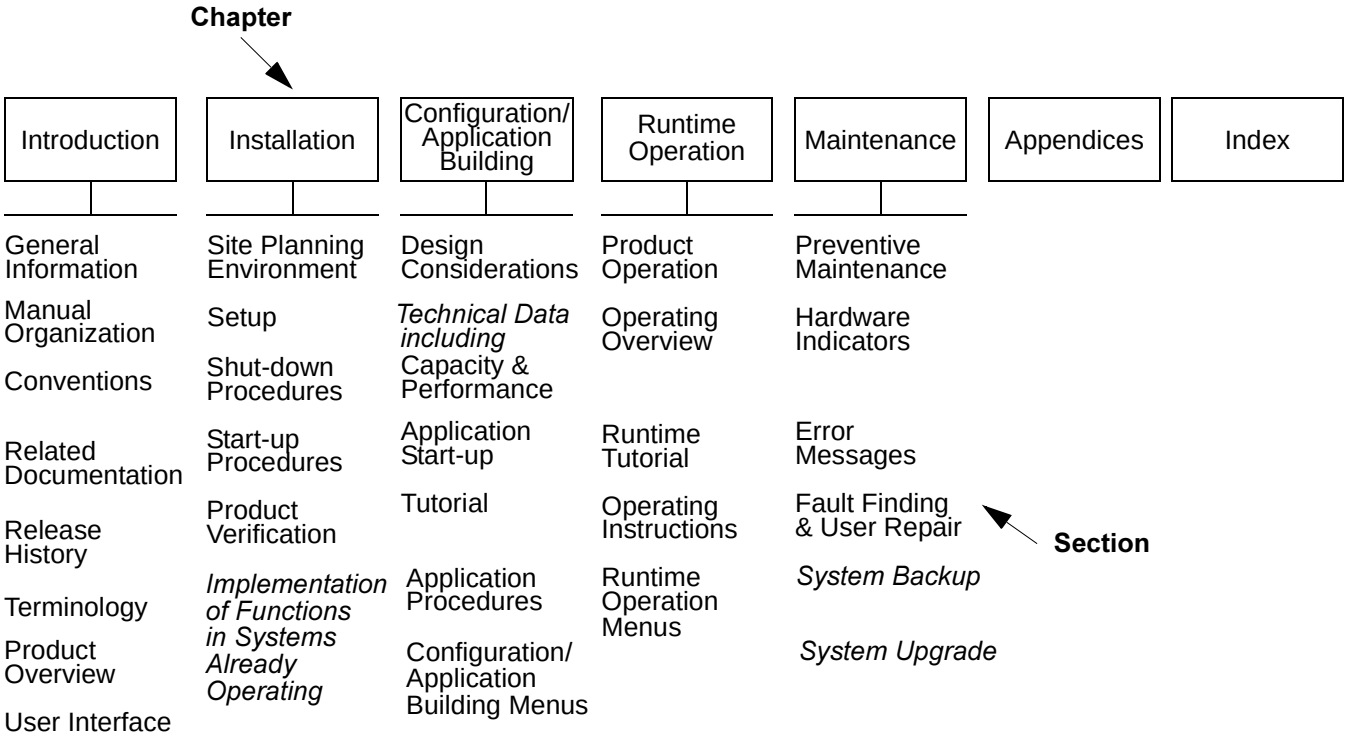

Figure 1-2. Basic Documentation Structure

The substructure followed in the product description in Section 1.7, Product Overview is also followed in other sections describing, for example, Design Considerations and Capacity & Performance. This is done to make it easy for you to find the information you need about different activities.

Because of the activity-oriented structure of the document, you may find information regarding an actual function distributed to, for example Overview, Configuration, Operation, and so on. Sometimes you can find device information gathered in the hardware descriptions in the appendices.

Chapter 1, Introduction

(this chapter) provides introductory and background information, including:

- Guidelines on how you can find information in this manual.
- This manual's relationship to other Advant Controller 450 documents.
- A glossary defining terms frequently used in this manual.
- A product and functional overview. Read this to get an idea of what the Advant Controller 450 can do and how it works.

Chapter 2, Installation

guides you through various installation activities:

- Section 2.1, Site Planning Environment. This section contains guidelines for planning installation of the product, outlining what you need to think about when you plan an installation. It does not, however, provide the complete list of measures to take. You can find descriptions of alternative solutions, design considerations elsewhere in this manual.
- Section 2.2, Setup. This section gives you concrete information on how to set up the product. It includes safety regulations, handling and unpacking instructions, inspection and assembly procedures, cable routing and connections, switch settings and jumper positions, setup procedures, and so on. You can find common instructions as well as instructions for specific subsystems in this section. Activities prior to power-up are also described.
- Section 2.3, Shut-down Procedures. This section provides, in addition to some safety regulations, basic shut-down procedures. You should know how to shut down the product if there is a problem with initial power-up.
- Section 2.4, Start-up Procedures. In Section 2.2, Setup, the conditions and the preparation necessary to begin are discussed. In Section 2.4, Start-up Procedures, you can find basic power-up procedures, that is how to apply power to and initialize the system. Information is also given on how you can verify a correct start. You can find information on activities up to "ready for application program loading" in this section.
- Section 2.5, Product Verification. This section tells you how to make an initial determination that the product is functional. This includes application program loading as well as commissioning information.
- Section 2.6, Implementation of Functions in Systems Already Operating. This section gives you the information you need to determine when, for example, to add an I/O board to a running system. Important on-line, off-line aspects are discussed.

Chapter 3, Configuration/Application Building

gives you detailed information about how to obtain a desired function. The main information is structured as follows:

- Section 3.1, Design Considerations. You can find design guidelines, including design rules, in this section. Keywords include the following.
  - Limitations
  - Combinations of options
  - Module assortment supported by the system product
  - Location
  - Necessary extra HW and SW needed with respect to desired functionality
  - CPU load calculation
  - Memory calculation.
- Section 3.2, Technical Data Including Capacity & Performance.
  In this section, technical data of the following types, for example, are discussed:
  - Maximum number of instances
  - Dimensions
  - CPU-load data
  - Memory capacity.
- Section 3.4, Tutorial. This section provides you with a guide through the different phases of a controller design project.
- Section 3.5, Application Procedures. Not applicable. For information from a configuration viewpoint, how to achieve an application function, see the appropriate individual manuals. In this manual, Chapter 2, Installation treats the subject of concrete setup work on site.

Chapter 4, Runtime Operation

addresses the controller's different start modes and operating modes. The operator interface on the processor module front is described.

In this chapter, you can also find a survey of the system software. Some important facilities that you need to know during application work are described in greater detail.

Chapter 5, Maintenance

The preventive maintenance required for electronic equipment is not significant. This chapter focuses on fault finding supported by built-in diagnostics. Various methods of fault announcement are presented, including the use of system status in the central operator station and LEDs on controller hardware units.

Appendices

A variety of information which does not fall into other categories within this manual's structure are included in the appendices. Examples are:

- Controller hardware descriptions
- Item designations in cabinets
- Description of delivery documentation
- Blanks for use during design work, for example calculation of heat dissipation.

Index

The Index offers you an easy and quick way to find answers to specific questions.

1.3 Conventions

Different versions of the processor module exist. In this User's Guide the generic name PM511 is used all through the manual.

Advant OCS is used for Advant Open Control System, with Master software, throughout this manual.

1.4 Related Documentation

This manual is the main document of the system product Advant Controller 450. Many of the available options are briefly described in this manual. For additional detailed information about options, see the appropriate individual manuals. Special subjects are also thoroughly treated in separate documentation.

NOTE

The delivery binder, described in Appendix C, Delivery Documentation, includes a document, *Release Notes,* which comprise the latest product information not covered by the standard user documentation listed below. You may find, for example, additionals, changes, limitations, alerts and so on.

The extensive list of related documentation is structured into four subject areas:

- Configuration/Application Building
- Installation
- Optional functions
- Tools.

Table 1-1. Related Documentation - Configuration/Application Building

Document	Description
PC Elements AC 400 Series	Data for all PC elements in AC 410/450.
Data Base Elements AC 400 Series	Data for all data base elements in AC 410/450.
AMPL Application Building	Basic manual covering the use of the application program language AMPL.
AMPL Configuration AC 400 Series	Instructions for the configuration and application programming of AC 410/450 systems using Advant Station 100 Series ES. Commands for diskette handling are described in the User's Manual on the tool concerned.
User Defined PC Elements	Describes how to define your own library of PC elements.
Object Support via Advant Fieldbus 100 AC 400 Series	Describes how to operate objects in Advant Controller 110/160 from a Advant Station 500 Series Operator Station.
Functional Units Part 1 Summary and Common Properties	An introduction to the concept of Functional Units in Advant OCS with Master software.
Functional Units Part 2 AI, AO, DI, DO	Describes the functional units AI, AO, DI and DO.
Functional Units Part 3 SEQ, GROUP	Describes the functional units SEQ and GROUP.
Functional Units Part 4 PIDCON, RATIOSTN, MANSTN	Describes the functional units PIDCON, RATIOSTN and MANSTN.
Functional Units Part 5 GENCON, GENBIN, GENUSD	Describes the functional units GENCON, GENBIN and GENUSD.
Functional Units Part 6 MOTCON, VALVECON	Describes the functional units MOTCON and VALVECON.
Functional Units Part 7 PIDCONA	Describes the functional unit PIDCONA
Functional Units Part 8 DRICONS	Describes the functional unit DRICONS
Functional Units Part 9 DRICONE	Describes the functional unit DRICONE
Functional Units Part 10 MOTCONI	Describes the functional unit MOTCONI
Application Notes	Application notes on measurement and control.

Table 1-2. Related Documentation - Installation

Document	Description
Environmental Immunity for ABB Advant OCS Products	Description of the environmental immunity for ABB Advant OCS products.
Elektroniska Apparater	Minimum requirements on electronic equipment used in power industry within EC and EFTA (in Swedish).
Interference-free Electronics Design and applications	This book teaches how to design circuit boards, electronic devices and systems with high immunity to interference. It also deals with process adaptation, communication and power supply with immunity to interference.
Terminal Diagram Forms	Complete set of diagrams on AC 450 covering all the different I/O sets (boards, cables and terminals) as well as the central unit and the power supply.

Table 1-3. Related Documentation - Optional Functions

Document	Description
S100 I/O Hardware	Reference manual describing the S100 I/O hardware.
HART Protocol Interface	User's Guide describing how to include and use the HART protocol with S100 I/O.
Intrinsic Safety Support S100 I/O	User's Guide describing how to include and use the Intrinsic Safety System with S100 I/O.
S800 I/O User's Guide	This is a complete manual on the S800 I/O system. Contains technical descriptions, instructions for installation, commissioning, fault tracing and technical data.
EXCOM	Contains a description of EXCOM, necessary hardware and installation instruction.
EXCOM Programmer's Reference Manual	This manual describes how to install and use the EXCOM communication package in an external computer. It describes all available services and their parameters. It also covers the subject of declaration of necessary variables and data types.
MasterView 320	Complete manual for MV 320 containing descriptions, operating instructions, linkages to PC programs, descriptions of error messages and a table of ASCII codes.

Table 1-3. Related Documentation - Optional Functions (Continued)

Document	Description
MasterFieldbus and S400 I/O	This is a complete manual on the S400 I/O system and MasterFieldbus. Contains technical descriptions, instructions for installation, commissioning, fault tracing and technical data. This manual also describes MasterPiece 51 as a distributed unit, that is the engineering required in AC 410/450 and the programming.
MasterNet	Manual describing how to configure, install and maintain MasterNet communication networks, MasterBus 300, MasterBus 300E and GCOM. For information about ABB MasterGate communication stations, see the manuals concerned.
RCOM AC 400 Series	Contains technical descriptions, instructions for configuration, installation, start-up and fault tracing of AC 410/450.
MultiVendor Interface Modbus with CI532V02 AC 400 Series	Contains technical descriptions, instructions for configuration, installation, start-up and fault tracing of Modbus in AC 410/450.
MultiVendor Interface Modbus with MVB + CI534V02 AC 400 Series	Contains technical descriptions, instructions for configuration, installation, start-up and fault tracing of Modbus in AC 410/450.
MultiVendor Interface Siemens 3964(R) AC 400 Series	Contains technical descriptions, instructions for configuration, installation, start-up and fault tracing of Siemens 3964(R) in AC 410/450.
Advant Fieldbus 100	Describes how to configure, install and maintain communication using Advant Fieldbus 100.
Positioning System User's Manual	Complete manual on positioning in MasterPiece 200 (applicable to AC 410/450) containing technical descriptions, instructions for engineering, installation, programming, commissioning and maintenance. This manual also takes up basic positioning theory, information about pulse transmitters and technical data on the function.
PROFIBUS-DP Advant Controller 400 Series User's Guide	Describes the equipment and contains information required to install and commission the system.
Advant Interface to LONWORKS User's Guide.	Describes the equipment and contains information required to install and commission the system.

Table 1-4. Related Documentation - Tools

Document	Description
Advant Station 100 Series Engineering Station	Contains a description of the basic functions, connection and start-up and how to work with the main functions.
AdvaBuild On-Line Builder	This reference manual describes all common commands used in AS 100ES, AS 500ES and AS 500OS.
AdvaBuild Function Chart Builder	Describes how to program an Advant Controller via Function Chart Builder.
Source Code Handling	This manual contains descriptions of and instructions for source code handling of PC programs and data bases. It contains instructions for designing source code, editing, loading and dumping and correcting defective programs.

1.5 Release History

Advant Controller 400 Series is an evolutionary development of the process station MasterPiece 200/1. New features have been added.
Two controller models are available:

- Advant Controller 410
- **Advant Controller 450.**

From a system viewpoint, the new controllers are fully compatible to their forerunners. This means that you can include new controllers in an available control network, as well as operate them from MasterView 800/1 and Advant Station 500 Series Operator Stations. An Advant Controller can run old application programs (if the functional libraries coincide).

The version history from the very first version ∗1.0 is given below:

New highlights in the **Advant Controller 450 ∗1.0**, include:

- More powerful CPU
- New hardware in central parts and voltage regulators
- New type of cabinet, RE500
- Number of certain I/O channels has increased
- Increased use of data base element for definition of the computer configuration
- One flash PROM module for standard system
- SW load modules:
  - Basic system
  - Options.

- New functional unit PIDCONA. A self-tuning PID controller with adaptation facilities
- Communication including event handling with Advant Controller 110 on:
  - Advant Fieldbus 100
  - RCOM.
- Routing of Advant Station 100 Series Engineering Station via Advant Controller 400 Series and Advant Fieldbus 100 to Advant Controller 110
- MultiVendor Interface for user-defined protocols
- Versions of MasterBus 300 and MasterBus 300E
  - Executed in slave CPU
  - Executed in main CPU.
- Free-programmable module with C (new series of PC elements)
- Maximum of seven MasterFieldbus
- Shortest log interval is 1 sec.

Some limitations apply and some changes were made with reference to MasterPiece 200/1:

- MasterView 100 is not included (it is, however, supported by the software)
- Communication board DSCA 160A is not included (PC elements removed)
- MasterFieldbus only supported via new hardware (not DSCS 131)
- Backup in PROM of application program is removed
- PC element STATUS replaced by COM-STAT
- MasterBus 200 is removed
- MasterBus 100 is removed.

New highlights in the **Advant Controller 450 ∗1.1**, include:

- Object oriented connection units
- 8 or 16 Mbyte memory in Advant Controller 450
- Optical S100 I/O bus extension for distributing I/O boards up to 500 m from the controller
- Ex-barriers adapted to the S100 I/O System by certain manufacturer
- HART Interface adapted to the S100 I/O System.

New highlights in the **Advant Controller 450 ∗1.2**, include:

- Integration of the S800 I/O System
- Twisted pair media for the Advant Fieldbus 100
- Number of Advant Fieldbus 100 increased
- Backup of application program on flash card
- More MMC_X instances
- User defined PC elements
- New appearance of RE500 cabinets
- RE500 cabinet with double doors as an alternative.

New highlights in the **Advant Controller 450 ∗1.3**, include:

- Extended range of the S800 I/O modules
- Modulebus Expansion in S800 I/O station
- New hardware for GCOM (CI543)
- PC element communication between two AC 410/450 on Advant Fieldbus 100
- New configuration of MVI protocol MODBUS (CI534V02).

New highlights in the **Advant Controller 450 ∗2.0**, include:

- Redundant S100 I/O bus
- Redundant Advant Fieldbus 100
- New processor module, PM511
- New S100 I/O bus extender, DSBC 174
- New Advant Fieldbus 100 interface module, CI522
- Object Support via Advant Fieldbus 100
- Extended range of S800 I/O modules.

New highlights in the **Advant Controller 450 ∗2.1**, include:

- Redundant Fieldbus Communication Interface for S800 I/O station
- PROFIBUS-DP
- DI Board, DI885, with sequence of events and cable supervision
- FUZZYCON - new PC-element for fuzzy control
- MVI - a new protocol (on CI534V04) Allen-Bradley DF1
- New Cabinet RM500.

New highlights in the **Advant Controller 450 ∗2.2**, include:

- Extended range of S800 I/O modules
- Extended bus length Advant Fieldbus 100
- New Advant Fieldbus 100 interface module CI522A.

New highlights in the **Advant Controller 450 ∗2.3**, include:

- LONWORKS Network Interface
- INSUM Switchgear integration
- PROFIBUS-DP, enhanced functionality
- HART data routing support
- Extended range of S800 I/O modules.
- New S100 I/O bus extender, DSBC 176. For single S100 I/O bus.

Regarding version designations, see Section 1.7.1, Product Versions.

1.6 Terminology

AMPL
The **A**BB **M**aster **P**rogramming **L**anguage is used for application programming.

Application Program
An application program is a general concept of an assembly of program functions aimed at realizing and automating an addressed process control function.

Application (user-built)
An application is a user-implemented configuration of standard hardware and software units. It is the solution to the user's problem.

Backplane
A backplane is part of a subrack which interconnects inserted electronics *modules* with the help of a communication bus.

Basic System
Basic system is the abstract name of a minimal composition of functional units forming a system.

Basic Unit
Basic unit is used for ordering purposes (for example in the Price Book) as a name for the smallest unit to be ordered or a platform for further enlargement with alternatives and options.

Board
A board is usually a hardware component of a *module*.

Boot
Boot refers to the (re)start of nodes. Phases of the boot process include, for example power-up diagnostics, software download, data base download and node initialization.
During the initialization phase of booting, control applications directly interfacing to process outputs perform a *cold start* or *warm start*.

Cabinet
The cabinet is the outer case of a piece of equipment (a packaging option), for example Controller cabinet, I/O cabinet.

CPU, Central **P**rocessing **U**nit
A CPU is a functional unit consisting primarily of a microprocessor and memory.

Circuit Breaker
In the context of a process control system, a circuit breaker is a device designed to open and close a circuit by nonautomatic means and to open the circuit automatically on a predetermined overload of current, without injury to itself.

Cold Start
Cold start is a kind of booting of a *controller* (or *process station*). This means:

- Erasing the user-built *application program*
- Transition to working mode CONFIGURATION.

Controller
Controller is a descriptive name for Advant Controller products.
A controller is an entity in which control applications are running.

From the product viewpoint, a controller consists of *CPU*, communication and certain auxiliary equipment such as power supply. It also includes the functionality of process I/O (the process data communication software). It does **not** include process I/O hardware (and firmware as applicable).

Control Network
The structure of *nodes* (for example controllers and operator stations) linked together via MasterNet is called a control network (DCN). It provides real time communication.

ESD
ESD stands for **E**lectro**S**tatic **D**ischarge.

Functional Unit
A functional unit is an ABB Master specified denomination.
It is a "package" of different software functions such as PC elements, data base elements and man-machine interface for an operator station.

HART
A protocol for connection of intelligent transducers (**H**ighway **A**ddressable **R**emote **T**ransducer). For example, measuring range, calibration and other maintenance data can be transferred.

Hot stand-by Redundancy
Hot stand-by redundancy is redundancy where a system component is backed up by identical hardware and software in the event of any failure. The backup components do not load-share with primary components.

I/O
I/O is process **I**nput or **O**utput. From the functional and geographical distribution viewpoint, process I/O is distinguished into two main categories:

- Central (located close to the controller)
- Distributed (in the process environment).

IMS, Information **M**anagement **S**tation
An IMS is a station executing information management applications such as statistical control, production control, and so on.

Initialization
Initialization sets a starting position.

INSUM
Integrated **S**ystem for **U**ser optimized **M**otor control. An ABB proprietary, LONWORKS based system for switchgear and motor control systems.

Intrinsically Safe Equipment
Intrinsically safe equipment and wiring is equipment and wiring which is incapable of releasing sufficient electrical energy under normal or abnormal conditions to cause ignition of a specific hazardous atmosphere mixture.

LED, Light **E**mitting **D**iode

Local Control, local operator
Local control is a mode of operation where responsibility is assigned to an operator/equipment located in the process environment close to the process object.

LONWORKS
A fieldbus developed and owned by Echelon Corporation, and with a public protocol.

Module
A module is a hardware unit, with or without accommodated software, or a software unit. There are modules of various sizes and functionality. Examples of hardware modules: *Subrack, submodule carrier*, communication module, I/O module.
Examples of software modules:
Basic system program module in a controller, a PC element.

Multi-drop Connection
A multi-drop connection is a means of establishing a multi-drop network, that is a network with two endpoint *nodes*, any number of intermediate *nodes* and only a single path between any two *nodes*.

Node
A node in general - a point in a data network.
A node in an application:

- Any logically addressable unit directly connected to the plant or *control network*. Examples are controller, process station, operator station.
- Any logically addressable unit connected via RCOM.

Object Oriented Connection
Object oriented connection means a way of organizing the connection of field intermediate cables from process objects which utilize different categories of signals, for example, DI and DO. The purpose is to eliminate the need of marshalling and cable split-up.

Off-line
With off-line configuration, configuration data is created outside the application for later installation, or the internal configuration data is directly affected, but the application is inactive.

On-line
With on-line configuration, the internal configuration data of a system application is directly affected, while the application is active.

Process Object
A process object is process concept/equipment, for example, valve, motor, conveyor, tank.

Process Station
Process station is a descriptive name for MasterPiece products.
A process station is an entity in which control applications are running. It includes the process I/O.

RAM, **R**andom **A**ccess **M**emory

Redundancy
Redundancy in general means the existence of more than one capability of an item (system, apparatus, component) to perform its intended function.

Slot
A slot means:

1. The place in the subrack where you put a *module*.
2. The place in a *submodule carrier* where you put a submodule.

Formally, for example, in data base elements, the terms POSITION and SUBMODULE POSITION are used instead.

Submodule Carrier
A submodule carrier is a module (circuit board) which houses smaller *modules* (submodules).

Subrack
According to IEC 916, subracks are the mechanics which house rows of boards. Different types of subracks are available, for example controller subrack, I/O subrack.

Type Circuit
Type circuit is an application-specific standard solution in connection to controller configuration. The scope of a type circuit is the controller data base and the PC program.

Warm Start
Warm start is a type of booting on controllers, which means resetting of dynamic information in PC programs and the data base.

1.7 Product Overview

Advant Controller 450 is a programmable system for control and supervision of processes and equipment in industrial environments.

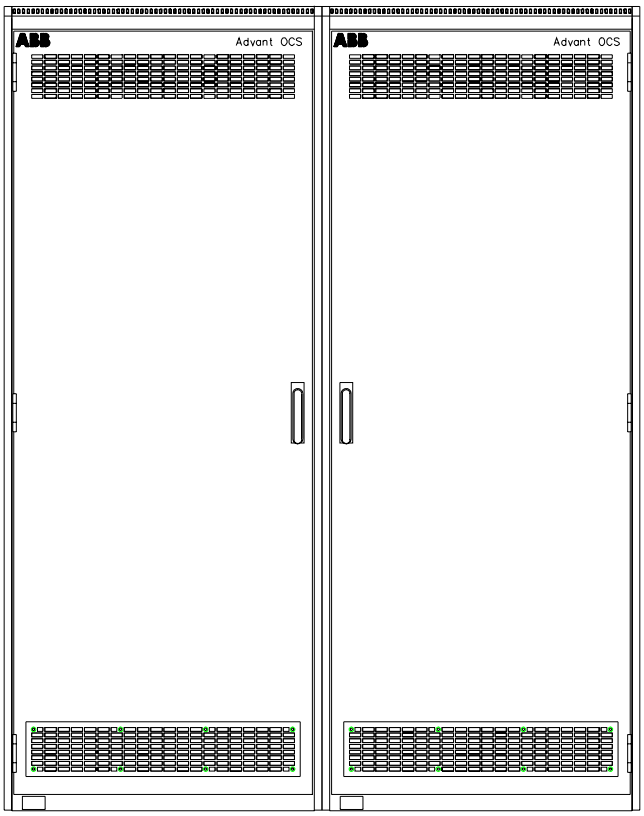

Figure 1-3. Cabinet for Advant Controller 400 Series, RM500, in a Front View

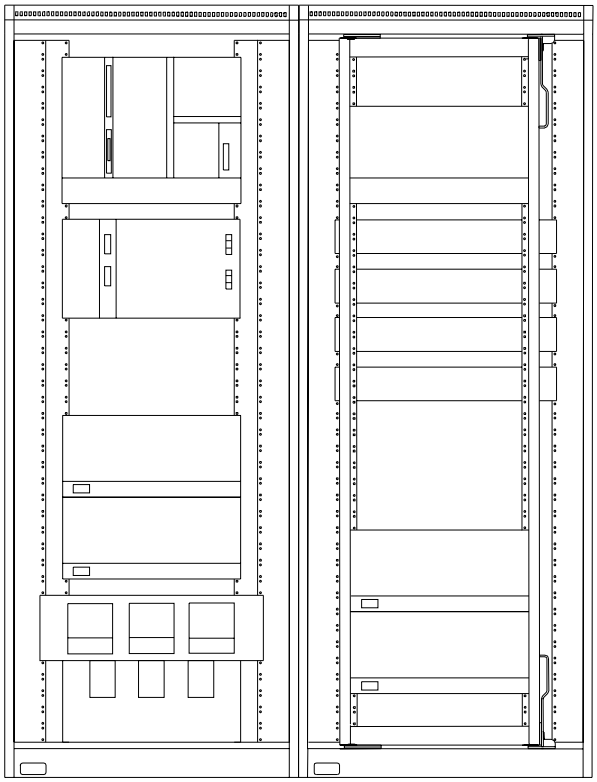

Figure 1-4. Advant Controller 450 in RM500 Cabinet (doors opened) - Example of Physical Appearance

The system can handle thousands of inputs and outputs, connected directly or remotely to the controller. Distributed I/O units, PLC-type controllers (Programmable Logic Controller) and converters for d.c. motor drives can be connected via a field bus. Interface is available to other vendors' systems.

Measured values can be logged and/or tied to alarm and event registration.

Depending on the number of input and output channels, several equipment frames (subracks) may be required to accommodate an Advant Controller 450 system. These subracks are installed in one cabinet or several cabinets.

You can include an Advant Controller 450 in a network with other ABB Master products, for example other Advant Controllers and products from the Advant Station 100 Series, the Advant Station 500 Series and the Advant Station 800 Series. These series include operator stations, information management systems (IMS) and engineering stations. From a compatibility viewpoint, you can also include MasterPiece 200/1 products, MasterView 800/1 products, SuperView 900 products and external computers in the network (see Figure 1-1).

You can connect a local operator station and a printer to an Advant Controller 450 via standard serial channels.

The programmability of Advant Controller 450 covers a wide range of functions, such as logic and sequence control, data and text handling, arithmetic, reporting, positioning and regulatory control, including advanced PID and self-tuning adaptive control.

A function-block language with graphic representation, you can use AMPL (ABB Master Programming Language), for configuration and application building. It is especially oriented toward process control.

The smallest units in the language are standardized functions, represented by graphic symbols (PC elements). Each PC element represents a complete function such as an AND-gate, a time delay, a shift register, a PID controller, and so on. (See Figure 1-5). The language offers a simple method to link PC elements and describe the data exchange between the functions selected to control the process.

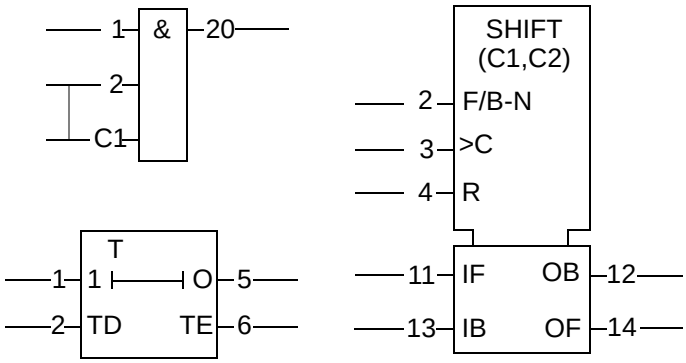

Figure 1-5. Example of PC Element (AND, TON, SHIFT)

You can assemble a number of PC elements to form a PC module, which in turn can be incorporated in further modules. Several modules form a PC program, which is the solution to automate an addressed process control function.

Such a PC program executes the PC modules, element by element, with a periodicity which you can normally select from 10 ms up to 2 s. You can document the complete program automatically in graphic form on a printer.

As a complement to the function block language, programmable boards (programmed in C language) are available for special applications.

A data base, which is a standardized storage place, is used for exchanging data with other parts of the Master system.

High-performance tools such as the Advant Station 100 Series Engineering Stations are available for configuration, application programming, documentation, testing and commissioning.

1.7.1 Product Versions

This manual describes the Advant Controller 450 as a product.

The complete standard product including software, hardware and documentation is designated Advant Controller 450 ∗X.Y/Z.

The software included, which is of modular character, is selected in accordance with the scope of the function and consists of a basic system program module and applicable function library program modules. All program modules are designated in principle in the same way, for example, QC07-BAS41 ∗2.0/0.

1.7.1.1 Version Designation

The designation of a complete standard product or a program module is divided into two parts by an asterisk.

The first part consists of a product name. The second part consists of a version number, minor version number and revision number. See Figure 1-6.

A third part, separated by another asterisk, is available for program modules only. It includes compatibility codes used by the configuration tool/engineering station for checks when loading and dumping.

The information display on the configuration tool indicates, upon connection into the system, the current product versions of the program modules.

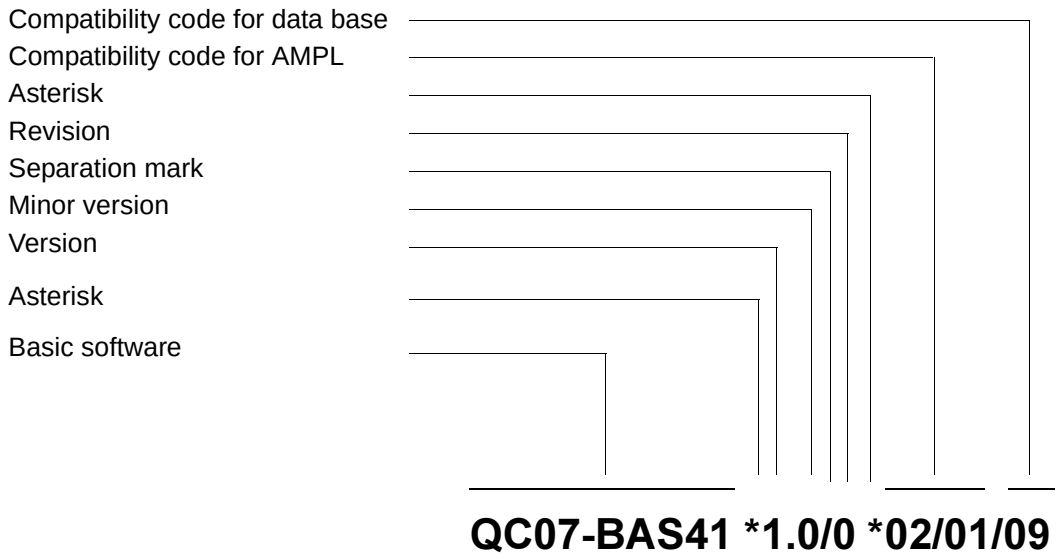

Figure 1-6. Example of Version Designation with Compatibility Codes for Basic Software

1.7.2 Product Structure

Headings in this section are:
General Modularization, Hardware, Block Diagram, Interface, Functional Modularization, Product Variants

General Modularization

ABB Master is a totally modularized system at all levels. The high level consists of a family of system products. An example of an advanced control system applying system products is illustrated in Figure 1-1.

The system product is divided into HW modules and SW modules. In this way, the system shows:

- High reliability
- High maintainability
- High integrity.

Hardware modules are replaceable units of the types power supply units, battery charger, and so on, and printed circuit boards to be located in subracks.

The assembled program modules defining the product's overall functionality are examples of software modules. The different PC elements represent the lowest level of software modularization exposed to you.

Further modularization exists to simplify different situations, for example sales, design, application building and so on. Composite units are made by basic modules. Primarily, you can find such packages in the Product Guide and other tendering and sales documentation.
For example, you will encounter the concept of a basic unit. Basic unit is used when you are ordering as a name for the smallest unit to be ordered or a platform for further enlargement with alternatives and options.

Hardware

Controller and process I/O are separate products. This means that, in this manual, you will find only short presentations of supported I/O systems and I/O boards. For more in-depth information, see separate I/O documentation.

The Advant Controller 450 includes:

- CPU with memory residing the fixed internal program (the system software) and the application program
- Communication submodules
- System software backup submodule
- A backup power supply including a battery charger
- 5 V regulators.
- A supervision module
- Submodule carriers.

You use submodule carriers and submodules to equip a subrack, which provides great flexibility in combining communication submodules of different kinds.

For a physical view of a medium hardware configuration, including an I/O subrack, see Figure 1-7. The denominations of communication link types and system functions used are made clear in the following subsections, beginning with Section 1.7.2, Product Structure.

The process I/O dedicated to an Advant Controller 450 is available as one or several I/O subracks (for central location close to the controller) or I/O units (for distributed location). Also available are different distributed, autonomous units including I/O, for example PLC-type controllers.

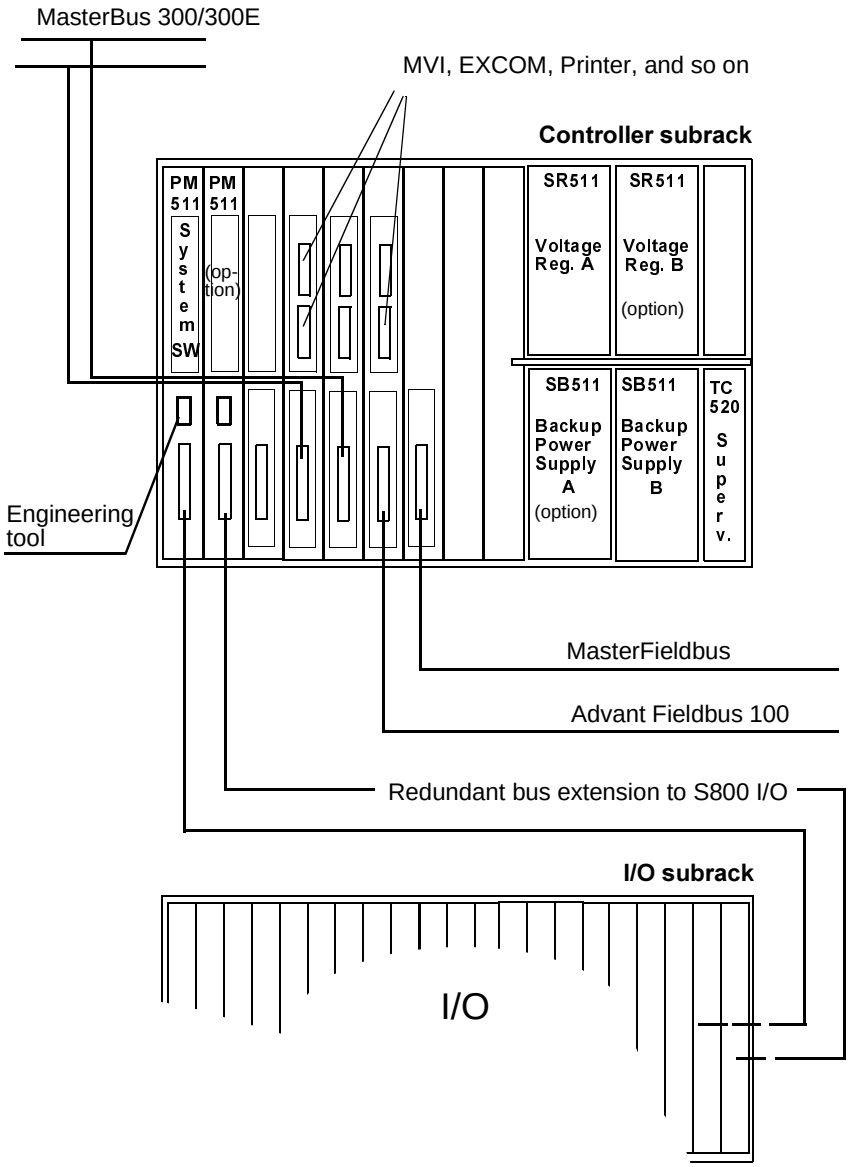

Figure 1-7. Example of Advant Controller 450 Hardware Configuration incl. a Variant of Process I/O

Block Diagram

Figure 1-8 indicates broadly the functional relationship between main system utilities and how the hardware is structured. This is an example of a version of the Advant Controller 450.

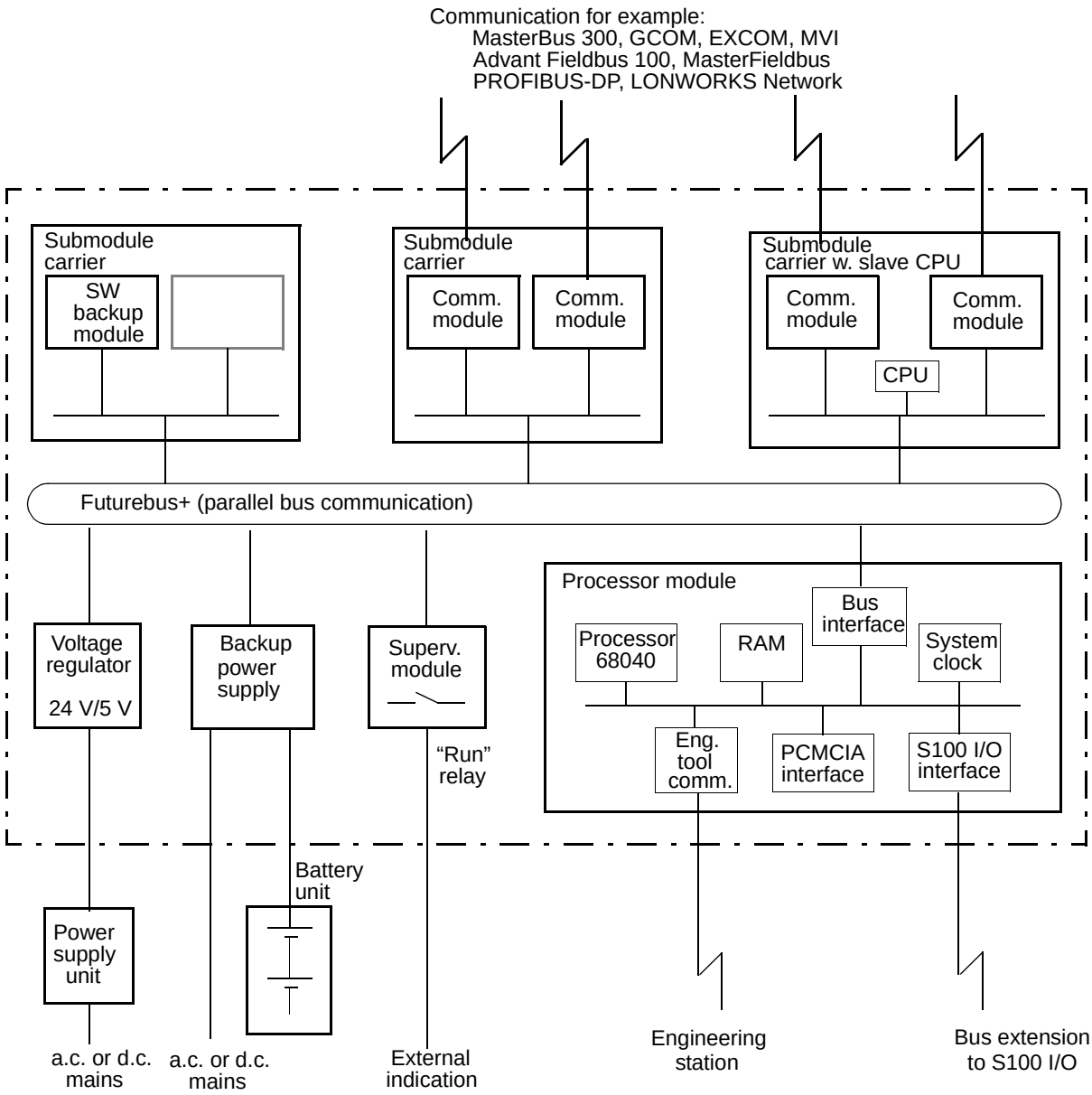

Figure 1-8. Advant Controller 450 Block Diagram

Interface

Besides the more "internal" I/O communication, a controller also communicates with a wide range of peripherals. Figure 1-9 is scheduling the main functional interfaces.

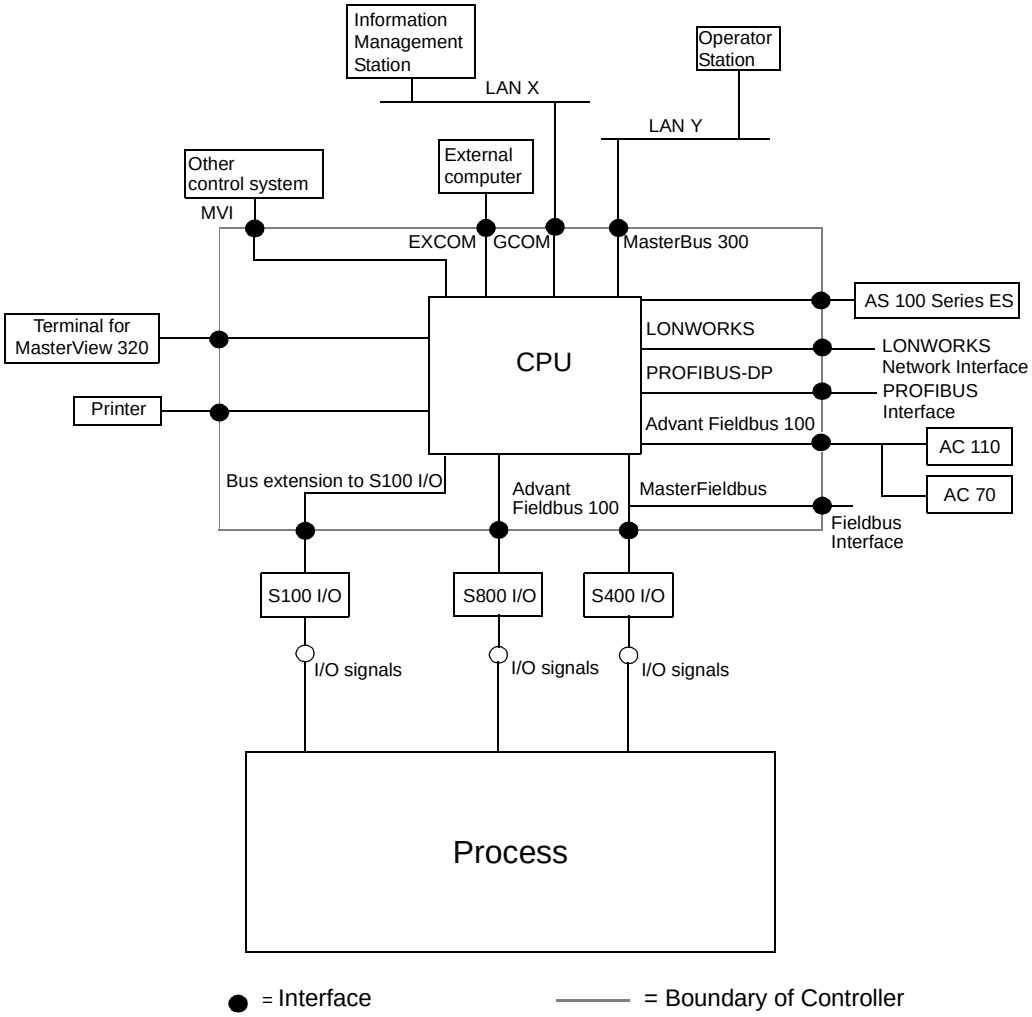

Figure 1-9. Advant Controller 450 Functional Interfaces

Functional Modularization

The concepts of basic function and optional function are sometimes used in the documentation of the Advant Controller 450 system. A system can be provided with a number of optional functions which enable you to adapt each system for specific control tasks. Certain functions require extra software while others require both extra software and extra hardware.

The memory system containing the Advant Controller 450 functionality is modular. The fixed **standard** system software is stored in one single flash PROM module, a program card. Additional program cards containing specific function libraries can be developed and used.

When you order an Advant Controller 450, you select the desired function repertoire from a library of program modules. These modules are factory assembled into a program card.

Available standard program modules with function library follow.

- Basic functions (always included):
  - QC07-BAS41 Basic system
  - (QC07-BOB41 Boot block).
- Additional functions:
  - QC07-LIB41 Additional PC elements 1
  - QC07-LIB42 Additional PC elements 2
  - QC07-FUZ41 Fuzzy control
  - QC07-LOS41 MasterView 320
  - QC07-OPF41 Operator functions support
  - QC07-BAT41 MasterBatch 200/1 support
  - QC07-UDP41 User defined PC Elements
  - QC07-COM41 Object support via Advant Fieldbus 100.

Examples of other optional functions requiring extra hardware are redundant CPU, communication between controllers, positioning, digital input, and so on.

Product Variants

The Advant Controller 450 is a flexible system offered in several variants with respect to, for example, redundancy, power supply, cabinetry, marshalling, and so on. You can find general information regarding principles and capabilities in this manual, but no details of the different product packages are included. Please refer to relevant tendering and sales documentation for that information.

1.7.3 General System Utilities

1.7.3.1 CPU

The central processing unit of the Advant Controller 450 comes in two versions with 8 or 16 Mbyte dynamic RAM. The versions are both designated Processor Module PM511V. A label on module side states the RAM size (PM511V**08** or PM511V**16**). A Processor Module is built up around a microprocessor, Motorola 68040, running at 25 MHz.

In this User's Guide the generic name PM511 is used all through.

On the module front, you can see indicators and a character display for high level system diagnostics. The main operable equipment is a four-position rotary switch for start and operating mode selection and a restart push button. See Chapter 4, Runtime Operation for more information on these functions.

The module front also includes a program card interface and a connection for S100 I/O bus communication.

You can connect a configuration and maintenance tool on the module front.

1.7.3.2 Memory

The Processor Module PM511 contains the total amount of RAM (Random Access Memory), which is an 8 or 16 Mbyte dynamic RAM with error correction code. This memory holds the system program which is in use as well as the controller system configuration and application program, that is all memory executed in run time.

The system program is described from the organizational viewpoint in Section 1.7.2, Product Structure, under the heading Functional Modularization. The functional content is treated in the next section, Section 1.7.3.3, Program Module Contents.

System Program Backup

The system program is backed up in flash PROM and automatically loaded to the RAM in connection to system start. Physically, the standard system software is stored in a program card (PCMCIA). The basic system program card must always be located in the CPU as illustrated in Figure 1-10 below. Normally the program card should be in place during operation.
The program card must be in place in order to start-up the backup CPU of a redundant pair.

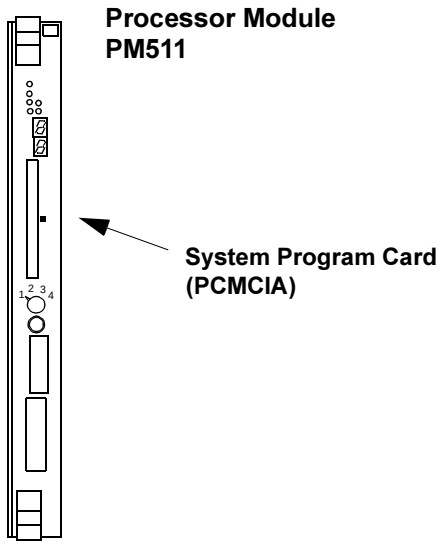

Figure 1-10. Location of System Program Card (PCMCIA)

Additional program cards are located in program card interface MB510 as illustrated in Figure 1-11.

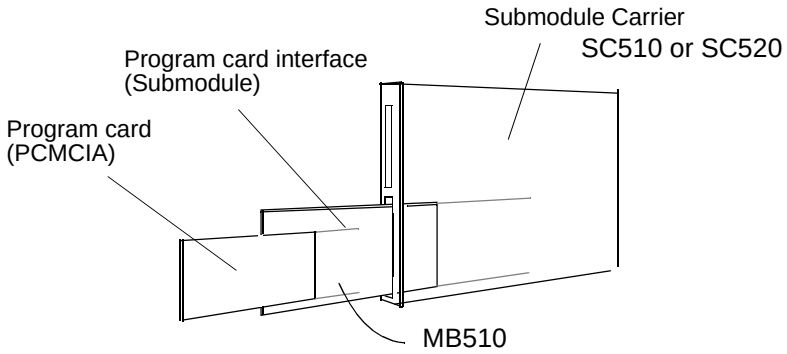

Figure 1-11. Location of Additional Program Cards

Application Program Backup

The controller system configuration and the application program is normally created in an off-line or sometimes an on-line configuration session supported by an engineering station. The work is basically backed up in the engineering station environment (hard disc, flexible disc or likely).

To restore a RAM which has been cleared by an accident or a fatal error some measures have to be taken, automatically and manually. In addition to the automatic loading of the system program, described above under the heading System Program Backup, somebody has to manually load the application program backup (including the controller system configuration) using an engineering station. In some applications this is a too time consuming procedure and it needs assistance of qualified maintenance people.

As an alternative the Advant Controller 450 can be equipped with an optional flash card of similar type as the one used for the system program. The illustration in Figure 1-11 apply. The flash card is contained with a **DU**mp of **A**pplication **P**rograms (DUAP) preferably taken while the controller is in the operation mode. At need, the controller system configuration and the application program is likewise automatically loaded from its flash card into the controller RAM. No manual intervention is needed to get into operation after the interruption.

Flash cards are available in different memory-sizes. Select a type that take the actual application program.

The system program backup and the application program backup can not be mixed in one single program card.

Power Supply Backup of Memory

The RAM is secured against loss of power for a minimum of four hours (two hours when redundant processor modules) by a backup power supply and battery. This is important for the configured application program, which is basically not otherwise backed up.

If a longer backup time is desirable, you can use:

- Additional backup power supply unit SB510 and battery package (doubled backup time)
- Alternative backup power supply unit SB511 connected to a 24 V or 48 V external battery system
- An application program backup (see heading above).

1.7.3.3 Program Module Contents

The program function library, among others, contains PC elements and functional units. A functional unit is a package of different program functions such as PC elements and operator's functions. This simplifies the realization of combined functions with both the control function and associated operator's handling via a display screen and keyboard.

Please find below a survey of the functional contents and the concrete PC elements and functional units in the different program modules.

Basic System, QC07-BAS41

The basic system program is sufficient when you need digital signal processing, arithmetic, queue and shift functions. It works with both analog and digital input and output signals.

Functional Serve

- Logic and time delays
- Sequence control
- Data and text handling
- Calendar time functions
- Arithmetic
- Positioning
- Fast pulse counting and frequency measurement
- Reports
- Functional units, binary [1]
- Functional units, analog [1]
- Functional units, motor and valve control, group start [1]
- Table handling
- EXCOM Data Set communication
- Support for MasterBus 300
- Support for GCOM
- Support for RCOM
- Support for MultiVendor Interface
- Support for connection to Advant Fieldbus 100
- Support for PROFIBUS-DP
- Support for LONWORKS Network
- Support for connection to ACV 700 and DCV 700 thyristor converters
- Support for connection to TYRAK and SAMI thyristor converters
- Support for connection to strain gauge scales
- Free-programmable module.

1. Only the PC and data base element parts of the functional units are included in the basic program module. For presentation and dialog support, QC07-OPF41 must be added. Special dedicated interface boards are **not** included in the basic unit.

Table 1-5. PC Elements in the Basic System Program Module QC07-BAS41

Type	Function	PC element
Structure elements	PC elements for structuring of PC programs, including breakdown of sequences into steps.	BLOCK, CONTRM, FUNCM, MASTER, PCPGM, SEQ, SLAVEM, STEP
Logic elements	Logic gates and binary memory elements.	AND, AND-O, INV, OR, OR-A, SR, SR-AA, SR-AO, SR-D, SR-OA, SR-OO, XOR
Arithmetic elements	PC elements for the four basic calculation modes and some special expressions, including square root, absolute value and limitation.	ABS, ADD, ADD-MR, ADD-MR1, DIV, DIV-MR, LIM-N, MUL, SQRT, SUB
Time delays	Timer elements for on- and off-delays and pulse functions.	MONO, TON, TON-RET, TOFF, TRIGG, OSC-B
Calendar time elements	Time of day and date elements and element for generating output signals at certain dates and times of day.	DATE, TIME, TIMER
Registers	Shift and queue registers and register with retentive memory.	FIFO, REG, REG-RET, SHIFT, SHIFT-L,
Group data elements	Register assembling single data into a group data and elements for expanding group data or arrays into single data items.	EXPAND, EXPAND-A REG-G
Queue registers	Queue register with various data manipulation capabilities.	FIFO-RW
Multiplexers/ Demultiplexers	Select single data items from groups of data and vice versa.	DEMUX-MI, DEMUXA-M, MUX-I, MUX-MI, MUX-MN, MUX-N, MUXA-I
Code converters	Convert data from one data type to another, for example binary to integers, arrays (text) to integers and string data to array data and inversely.	CONV, CONV-AI, CONV-BI, CONV-IA, CONV-IB, CONV-SA
Counters	Pulse counters.	COUNT, COUNT-L
Comparators	Compare single data items and select maximum and minimum values.	COMP, COMP-I, COMP-R, MAX, MIN

Table 1-5. PC Elements in the Basic System Program Module QC07-BAS41 (Continued)

Type	Function	PC element
Fault elements	Handle groups of fault signals for lamp indication with flashing, acknowledgment and alarm.	FAULT
Printing and text generation elements	Compose text strings and print reports.	PRINT, TEXT
Elements for functional units	Interface PC programs with Advant Station 500 and MasterView 800 operator stations for control of motors, valves and other process objects.	GENBIN-I, GENBIN-O, GENUSD-I, GENUSD-O GENCON-I, GENCON-O, MOTCON, VALVECON, MMC-IND, MMC-ORD
Switches	Switch between two sets of data.	SW, SW-C
Positioning elements	Positioning and length-measuring elements with both analog and on/off outputs. Works with hardware module DSDP 140A.	POS-A, POS-O, POS-L
Pulse counting and frequency measurement elements	Synchronize the board DSDP 110 for low-speed pulse counting. Pulse counting and frequency measurement when used with DSDP 150 and DSDP 170.	COUNT-DP, FREQ-MP, FREQ-SP, PULSE-S, PCU-COM, PCU-I, PCU-O, PCU-SS
Pulse counting and frequency measurement elements	Provide pulse counting and frequency measurement with S800 module DP820.	DP820-I, DP820-O
Data handling	Copy data from input to output.	MOVE, MOVE-A
Event handling elements	Create event text for MasterView 320.	EVENT
Report elements	Print reports in Advant Station 500 Series Operator Stations.	REPORT
Elements for programmable module	Input and output elements for the hardware module PU535.	FPM-COM, FPM-I, FPM-IA, FPM-O, FPM-OA
MasterView 100 elements	Elements for control of the panel units.	DISP, DISP-SEG, KEYB-FU, KEYB-GR, KEYB-N1, NUM-IN

Table 1-5. PC Elements in the Basic System Program Module QC07-BAS41 (Continued)

Type	Function	PC element
Weighing elements	Interface strain-gauge scales with PC programs in Advant Controller 400 Series.	SCALE, SCALE_DOS
Table handling elements	Elements for handling data as tables.	TBL-R, TBL-RG, TBL-W, TBL-WG
Ramp generators	Ramp generator with S-shaped output.	RAMP-S1
Supervision elements	Evaluate the load on Advant Controller 400 Series and Advant Controller 100 Series, element for connecting of supervisory signals from MasterNet to AMPL program.	ANALYSE, COM-STAT
PROFIBUS-DP communication elements	Provide communication on PROFIBUS-DP	PB-R, PB-S, PB-DIAG
LONWORKS Network Communication elements	Provide communication on LONWORKS Network	LON-R, LON-S
MasterFieldbus communication elements	Provide communication with MasterPiece 51, MasterPiece 90, Advant Controller 110, TYRAK or SAMI via MasterFieldbus.	COM-CVI1, COM-CVO1, COM-MP51, MFB-OUT, MFB-IN
Advant Fieldbus 100 communication elements	Provide fast communication with other AC 400 Series nodes and Motor Drive Control.	DSP-R, DSP-S, DRI-CNV, DRI-R, DRI-S
Data Set elements	Initiate execution of Data Sets.	SENDREQ

Table 1-6. Functional Units in Program Module QC07-BAS41

Functional unit	Description
AI	Analog input signal, including AI, Temp (Pt100), TC (thermocouple), AIC (calculated AI) and pulse counter (DSDP 110)
AO	Analog output signal, including AO and AOC (calculated AO)
DI	Digital input signal, including DI and DIC (calculated DI)
DO	Digital output signal, including DO and DOC (calculated DO)
DAT	General data base value

Table 1-6. Functional Units in Program Module QC07-BAS41 (Continued)

Functional unit	Description
DRICONE	Integration to engineered Drive
DRICONS	Integration to Drives of ACS600 type.
GENUSD	General user-defined device controller
GENBIN	User-defined on-off controller
GENCON	User-defined regulatory controller
GROUP	Device group controller
MOTCON	Motor controller
MOTCONI	Motor controller with INSUM
SEQ	Sequence controller
TEXT	Text in data base
VALVECON	Valve controller

The program module QC07-BAS41 is in principle composed by QMP240 in earlier releases of ABB MasterPiece 200/1.

Additional PC Elements 1, QC07-LIB41

QC07-LIB41 extends the PC element library that is included in the basic system program module with PC elements to support the functions listed below.
The optional program module QC07-LIB41 is selected, for example, for control operations with few demands for operator intervention from panels or when, for example, a local operator station like the MasterView 320 is adequate.

Functional Survey

- Feedback control
- Connection to analog thyristor converters.

Table 1-7. Additional PC Elements in Program Module QC07-LIB41

Type	Function	PC element
Logic elements	A general type of gate function element with selectable number of inputs.	THRESH-L
Arithmetic elements	Select the median and majority values from a group of values and calculate exponential and logarithmic expressions.	MED-R, MAJ-R, LN, EXP
Multiplexers	Multiplex group data and single data items.	MUXGR-MI, MUXGE-MI

Table 1-7. Additional PC Elements in Program Module QC07-LIB41 (Continued)

Type	Function	PC element
Time controlled elements	Square- and sine-wave oscillators.	OSC-SQW, OSC-SIN
Function generators	Generate an output from one or two input variables according to a function described by data tables or as a function of time.	FUNG-1V, FUNG-2V, FUNG-T
Filter elements	Low-pass filters with one or two poles.	FILT-1P, FILT-2P
Feedback control elements	P, I and D functions and their combinations, plus pulsed outputs and ramp generator.	P-DEADB, P-1, INT, DER, PI, PIP, PDP, CON-PU1, RAMP
Analog thyristor converter elements	Interface analog converters with PC programs in Advant Controller 400 Series.	CVB-I, CVB-O

Additional PC Elements 2, QC07-LIB42

QC07-LIB42 extends the PC element library that is included in the basic system program module with PC elements and functional units for supporting the functions listed below. The optional program module QC7-LIB42 is selected for advanced controlling which requires powerful operator's functions from an Advant Station 500 Series Operator Station or a MasterView 800/1.

Advanced process control requires, in addition to QC07-LIB42, the program module for operator functions support, QC07-OPF41.

Functional Survey

- Feedback control
- Self-tuning adaptive control, NOVATUNE
- Functional units, PID loop control, PIDCON, PIDCONA.

Table 1-8. Additional PC Elements in Program Module QC07-LIB42

Type	Function	PC element
Elements for functional units	Contain two variants of advanced PID-controllers (one is self-tuning and adaptive), a ratio station and a manual station, all with ready-to-run interfacing with Advant Station 500 Series and MasterView 800/1 operator stations	PIDCON, PIDCONA, RATIOSTN, MANSTN
Self-tuning adaptive controller	Adaptive, self-tuning, controller with feed-forward and dead-time compensation.	NOVATUNE

Table 1-9. Functional Units in Program Module QC07-LIB42

Functional unit	Description
PIDCON	Regulatory controller
PIDCONA	Adaptive self-tuning regulatory controller
RATIOSTN	Ratio station
MANSTN	Manual station

Fuzzy Control, QC07-FUZ41

QC07-FUZ41 contains the PC element FUZZYCON for fuzzy control. The control algorithm is defined via a compiler for Fuzzy Control Language (IEC 1131-7).

MasterView 320, QC07-LOS41

The optional program module QC07-LOS41 extends the functionality given by the basic system program module with functions listed below.
QC07-LOS41 adapts the Advant Controller 450 to a MasterView 320, a local operator station built up on a VT100 terminal. This provides dialog texts in the following languages:
English, Swedish, Danish, Norwegian, Finnish, Dutch, German, French, Italian, Spanish and Portuguese.

Functional Survey

- MasterView 320
- Reports for MasterView 320.

Operator Functions Support, QC07-OPF41

The optional program module QC07-OPF41 extends the functionality given by the basic system program module with functions listed below. QC07-OPF41 adapts the Advant Controller 450 to an Advant Workplace and IMS Station or a MasterView 800/1 operator station.

Functional Survey

- Reports for Adva Command or MasterView 800/1
- Functional units, binary [1]
- Functional units, analog [1]
- Functional units, adaptive self-tuning PID loop control, PIDCONA [1]
- Functional units, motor and valve control, group start [1]
- Trend data storage
- Status list
- Group alarm
- Adva Command or MasterView 800/1 support.

MasterBatch 200/1 Support, QC07-BAT41

The optional program module QC07-BAT41 extends the functionality given by the basic system program module with functions listed below.
QC07-BAT41 adapts the Advant Controller 450 to the advanced batch functionality offered by a MasterBatch 200/1.

Functional Survey

- MasterBatch 200/1 support.

User Defined PC Elements, QC07-UDP41

The optional program module QC07-UDP41 extends the functionality given by the basic system program module with the possibility to define your own library of user defined PC elements. The user defined PC element is created in the Advant Station 100 Series Engineering Station and built-up of a combination of normal PC elements found in the standard PC elements libraries of the Advant Controller 450. After the user defined PC element is installed in the Advant Controller 450 it can be used freely in all PC programs as a normal PC element. These elements will appear in every sense as standard PC elements.

Object Support via Advant Fieldbus 100, QC07-COM41

The optional program module QC07-COM41 can provide AIS, DIS, MB, MI, MIL and MR objects in Advant Controller 110/160 to be operated from the operator station (Advant Station 500 Series or AdvaSoft for Windows).

Following functions are supported:

- Acknowledgment of events
- Blocking of events and alarms
- Blocking of process data update
- Blocking of process data value.

1. Only the presentation and dialog support are included in QC07-OPF41. The PC elements and corresponding data base are included in QC07-BAS41 and QC07-LIB42.

Table 1-10. PC Elements in Optional Program Module QC07-COM41

Type	PC Element
Advant Fieldbus 100 communication elements	COM-AIS, COM-DIS, COM-M

1.7.3.4 System Clock, External Clock Synchronization

The Processor Module PM511 is provided with a calendar clock which is backed up by the same battery used for memory backup. You can set the date and time from the programming unit or from a local operator station, for example MasterView 320. A slow, smaller adjustment in the interval ±100 s can also be performed with the programming unit.
With Advant Controller 450 connected to MasterNet, as a part in a distributed control system, the synchronization occurs automatically with other stations via a network with an accuracy better than 3 ms.

If extreme synchronization accuracy is required between controllers (in the order of 2 ms) and synchronization to an external clock, an external minute pulse signal can be connected to all systems concerned.

The supervision module TC520 has a special input for external synchronization of the calendar clock.

1.7.3.5 Configuration

You configure the system in accordance with the hardware and software selected, for example, the number of I/O boards, communication lines, functional units and PC programs. This is performed using commands from a configuration tool such as the Advant Station 100 Series Engineering Station and results in the internal organization and activation of the data base and program areas.

Configuration/application building is introduced in Section 1.7.8.2, Principles of Application Building.

1.7.3.6 Execution

The execution units in a PC program are normally given cycle times of 10 ms - 2 s (5 ms - 32 s after reconfiguration). The internal program system (operating system and PC interpreter) organizes the execution of the units with the periodicity selected, simultaneously performing other tasks such as communication with a MasterView 320 and programming units.

Ordinarily, you can select the same cycle times for reading in values from digital and analog boards.

1.7.3.7 Start-up

The CPU front panel has a rotary switch which you use to select start and working mode. The normal position of the switch is 1 (AUTO). This means an automatic start when voltage is switched on or when voltage is recovered after a power failure. At an interruption of voltage, the system stores all the information necessary for restarting. Whether the system is to continue operations from its status at the interruption of the voltage or if it is to be reset to zero before restart is selected with parameters.

The different ways to start are CLEAR, STOP, AUTO or OFF LINE. The way to start is selected on the basis of the duration of the voltage failure.

You can connect a control module which is activated when the voltage returns and which executes one cycle to each start alternative. All start modules must belong to the same PC program. You can define how the process is to start with these control modules. Alarm can also be blocked at initialization of the I/O boards. Start-up features and their application are described in *AMPL Configuration Advant Controller 400 Series Reference Manual.*

1.7.4 Free-Programmable Module

The Free-Programmable Module PU535 works as a slave-processor unit in Advant Controller 450. It is used to execute application programs written in the high-level language C. With respect to its function, such a program is a part of the main application program (PC program).

PU535 communicates with the PC program via a number of special PC elements. These elements are used for control of the application program on PU535 and for data exchange between the PC program and PU535.
For programming of the PU535, you can use an HP 9000/700 workstation to write and test the application programs and to download them into the PU535 using the built-in SLIP protocol. The PU535 also contains a simple User Test Interface for execution control and diagnostics, available through the service port (V24/RS-232-C).

1.7.5 Power Supply

System Power Supply

An Advant Controller 450 is normally delivered in one or several cabinets. Process I/O subracks are included as applicable. The equipment is designed, as standard, for connection to a 120/230 V single-phase or two-phase a.c. mains supply, 50/60 Hz or for connection to a 24-48 V d.c. mains supply. Several alternatives are available. The main alternatives are:

- Supply from an a.c. mains supply A
- Supply from a d.c. mains supply A
- Direct supply (without d.c./d.c. converter) from d.c. mains supply A
- Supply from one or two a.c. mains supplies, A/B with redundant supply units and regulators
- Supply from a d.c. mains supply A with redundant d.c./d.c. converters and regulators.

Common to all alternatives is an optional connection to a separate single-phase a.c. mains supply C. This network C feeds modems, which use a.c. power supply and a specific backup power supply SB510. The latter solution provides the feature to maintain battery charging and supply of the RAM while the power supply is otherwise switched off.

The uppercase A, B and C identify the mains supply in the documentation. They refer to mains supply with different requirements. Networks A and B are low-quality networks and they are redundant to each other. Network C is a high-quality network.
You can get more information on the planning viewpoint in Chapter 2, Installation, Section 2.1.7, Power Supply and Fusing.

The one-line diagram, Figure 1-12, shows the power supply in cabinets with a controller subrack and three I/O subracks. Figure 1-13 shows an alternative with redundancy. Supply from a.c. mains supply, including use of the optional mains supply C, is illustrated.
A d.c. alternative only differs in the use of alternative power supply units.

Depending on differing needs for circuit breaker capacity, there are different types of power switch and distribution units (SX5xx) specified to the individual installations. See the delivery documentation.

CE-marked equipment is provided with net filter at the enclosure port. These are not shown in the one-line diagram.

Detailed information on, for example, terminal block dispositions, locations, connections between units, and so on, is also given in a circuit diagram enclosed with the controller's delivery documentation.

The main functions in the power supply system are briefly described below. In addition, you can find more detailed hardware descriptions in Appendix A, Hardware Modules of this manual and in the *S100 I/O Hardware Reference Manual.*

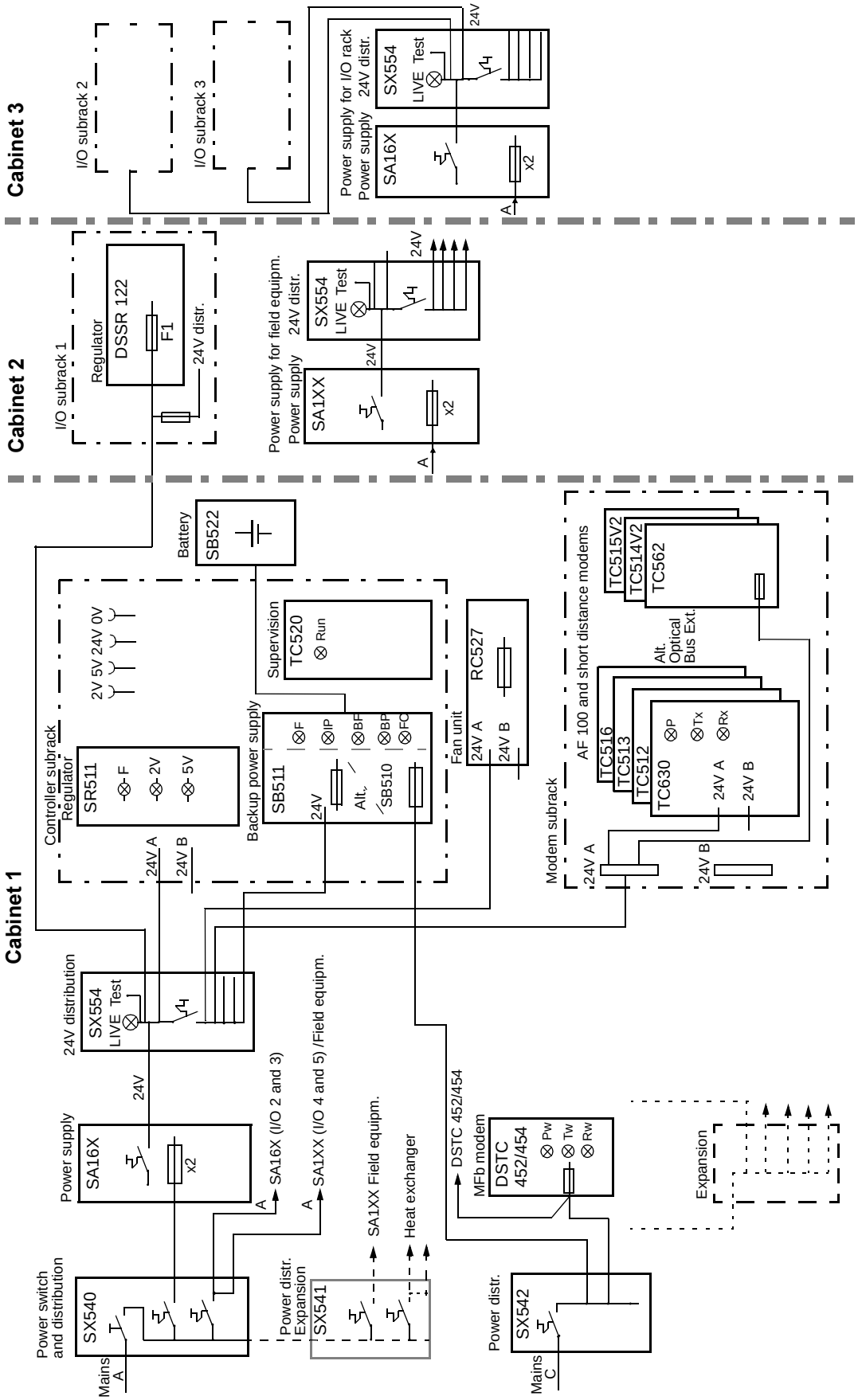

Figure 1-12. Principle of Power Supply of an Advant Controller 450 (a.c. mains supply)

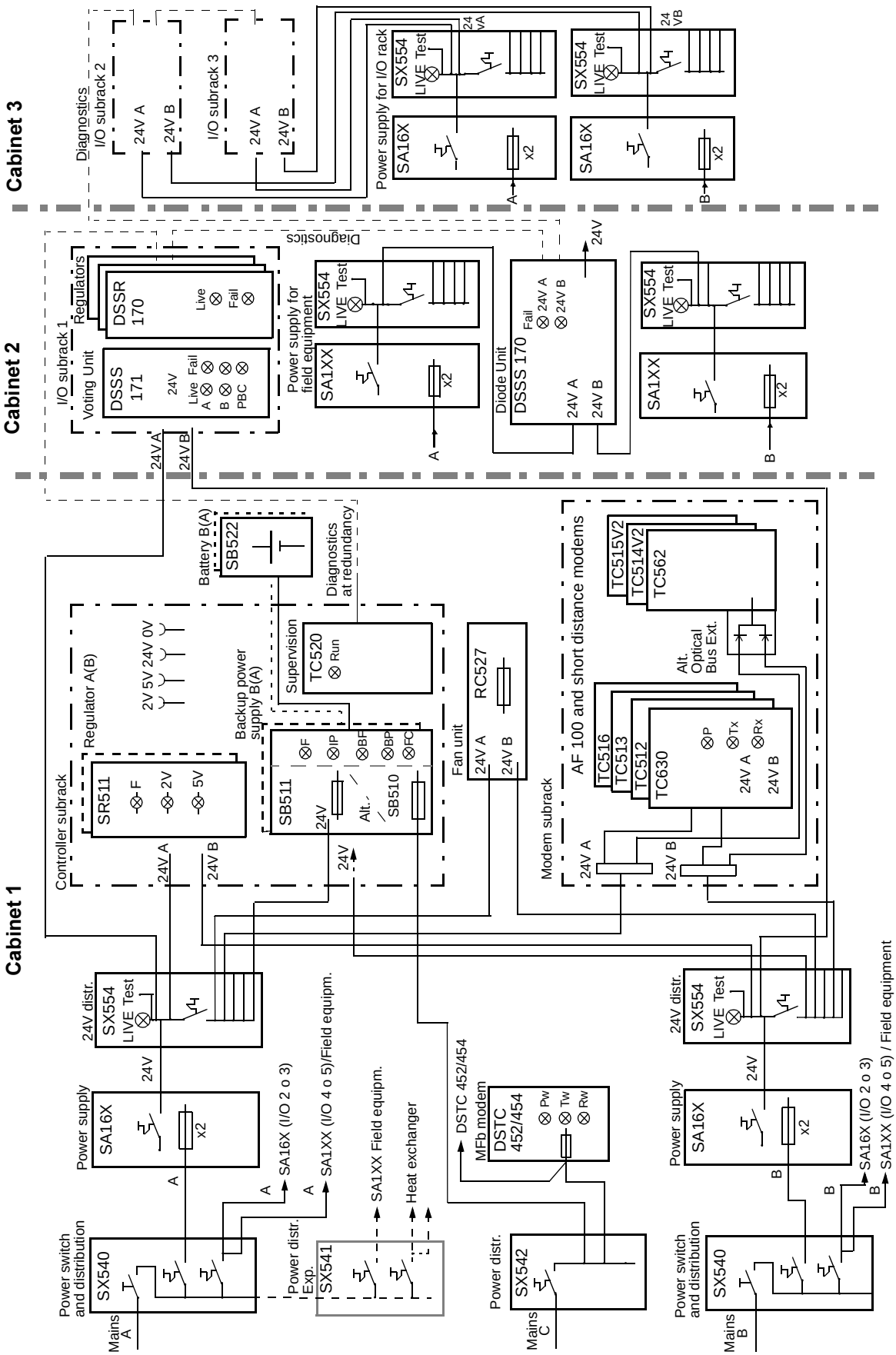

Figure 1-13. Principle of Redundant Power Supply of an Advant Controller 450 (a.c. mains supply)

Module Utilization

Table 1-11. Modules Used in different Power Supply alternatives

Application	Single Supply					Redundant Supply			
	a.c.		d.c.			a.c.		d.c.	
	120 V	230 V	24 V	24 V (1)	48 V	120 V	230 V	24 V	48 V
Mains Power Switch and Distribution:									
Mains A and B	SX540	SX540	SX555	SX555	SX550	2*SX540	2*SX540	2*SX555	2*SX550
Mains A and B (expansion)	SX541	SX541	SX555	SX555	SX551	2*SX541	2*SX541	2*SX555	2*SX551
Mains C, category II (2)	SX542	SX542	---	---	---	SV543	SV542	---	---
Mains C, category III (2)	SV541	SV540	---	---	---	SV543	SV542	---	---
Power Supply:									
Controller + I/O subrack 1	SA167	SA168	SD150	DSSB 170	SD150	2*SA167	2*SA168	2*SD150	2*SD150
I/O subrack 2	SA161	SA162	"	"	"	2*SA161	2*SA162	"	"
I/O subrack 2 and 3	SA167	SA168	"	"	"	2*SA167	2*SA168	"	"
I/O subrack 4	SA161	SA162	"	"	"	2*SA161	2*SA162	"	"
I/O subrack 4 and 5	SA167	SA168	"	"	"	2*SA167	2*SA168	"	"
Power supply units for field equipment 24 V d.c.	SA161	SA162	"	---	"	2*SA161 (3)	2*SA162 (3)	" (3)	" (3)
Power supply units for field equipment 48 V d.c.	SA171	SA172	--	--	--	--	--	--	--
Distribution 24-48V	SX554 is generally applied								
Voltage Regulation:									
Controller Subrack	SR511					2*SR511			
I/O Subrack	DSSR 122					3*DSSR 170 + Voting unit DSSS 171			

(1) 24 V without d.c./d.c. converter.
(2) According to IEC 664.
(3) A diode unit DSSS 170 is used for voting of 24 V A or B.

Mains Net Filter

The CE-marked design provides a mains net filter for each supply A, B and C. The filter is installed between the enclosure port and the mains power switch. The purpose is to minimize the risk of interference and the emission of conducted radio frequency field.

The filter is adapted to the estimated load from the installed equipment.

Mains Power Switch and Distribution

You use the power switch and distribution unit to connect and disconnect the Advant Controller 450 system to the mains and for distribution of voltage to different units in the cabinet. The power switch unit contains terminal blocks, miniature circuit breakers and power outlets for, for example, power supply units.

Normally, a common circuit breaker disconnects the mains from all cabinets housing the controller and the I/O installation, that is the "hard" related cabinets. Variants can exist. Please refer to the actual delivery documentation for further information.

Power Supply

The power supply units provide the regulators in the subracks with 24 V unstabilized d.c. voltage. They can also be used to supply other circuits which do not require stabilized 24 V voltage such as sensors, indicators, and so on.

There are certain restrictions on utilizing a common power supply for the system itself and external equipment. Please refer to Section 3.1, Design Considerations.

Use duplicated power supply units to provide redundancy.

Varying requirements on power supply are met by a range of supply modules with different technical data. You can select according to Table 1-12.

Table 1-12. Selection Guide of Power Supply Modules

Module type	a.c./d.c.	Net	Max. load	Remarks
SA161	a.c.	120 V	24 V, 10 A	
SA162	a.c.	230 V	24 V, 10 A	
SA167	a.c.	120 V	24 V, 25 A	
SA168	a.c.	230 V	24 V, 25 A	
SD150	d.c.	24-48 V d.c.	24 V, 20 A	
SA171	a.c.	120 V	48 V, 5 A	For field equipment only
SA172	a.c.	230 V	48 V, 5 A	For field equipment only

Voltage Regulation

All modules in the subracks are powered by 24 V unstabilized voltage and 5 V stabilized voltage. 24 V is converted to 5 V by voltage regulators. Each subrack has one or several dedicated voltage regulators. Different types are available which are adapted to mechanical, energy and special high-reliability/availability requirements.

Figure 1-14 shows the voltage regulator location in a controller subrack. The regulator module SR511 is intended to be installed from the front side of the controller subrack.

Redundancy is achieved by adding an extra module (n+1 redundancy).

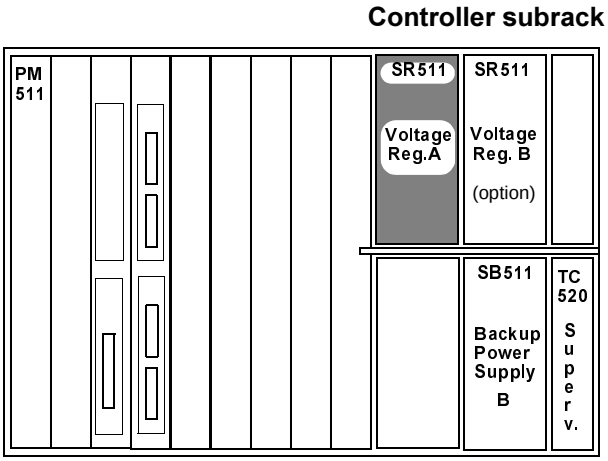

Figure 1-14. Voltage Regulation in Controller Subrack

You can equip an I/O subrack with a single voltage regulator DSSR 122 or redundant regulators of the type DSSR 170. The number of DSSR 170 is always three, two of which are needed with respect to capacity (n+1 redundancy). Figure 1-15 illustrates the two alternatives.
These regulator modules are installed on the rear of the I/O subrack.

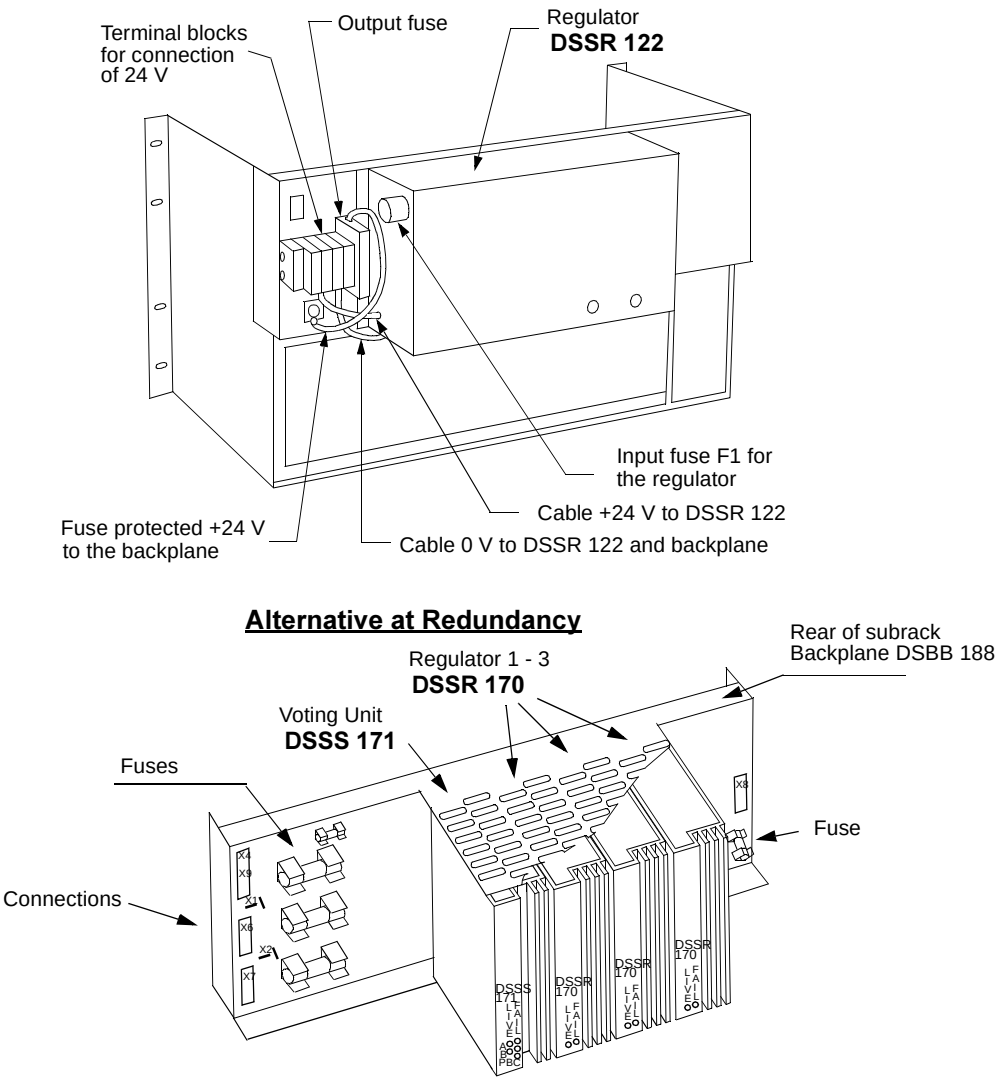

Figure 1-15. Voltage Regulation in I/O Subrack

Backup Power Supply

The power supply system for Advant Controller 450 includes a battery package intended for current supply for RAM and the system clock in the event of a power failure in the controller subrack.
The Ni-Ca battery included in Battery Unit SB522 is kept charged by a Backup Power Supply SB510 or SB511.
SB510 is used at 110-230 V a.c./d.c. supply voltage.
SB511 is used at 24-48 V d.c. supply voltage.

The backup power supply is supervised. Status is available to the controller diagnostic system. Status is also indicated by LEDs on the backup power supply module front.

Battery capacity is four hours in a single CPU system and two hours in a redundant CPU system.

For further technical data, see Chapter 3, Configuration/Application Building and the respective module descriptions in Appendix A, Hardware Modules.

Please note that you can use an optional network C, which maintains battery-charging and supply of the RAM while the power supply is otherwise switched off.
If a longer backup time is desirable, you can also use the alternative backup power supply unit SB511 connected to a 24 V or 48 V external battery system. Isolation is provided by SB511. Max input power to the backup power supply is 25 VA. The resulting backup time at for example 24 V, is then better than 1.5 h per 1 Ah external battery capacity (single processor module) or 1 h per 1 Ah external battery capacity (redundant processor modules).

The internal battery SB522 must be in position to get the normal diagnostics of the SB511.

Fusing

The fusing and electronic overload protection of the Advant Controller 450 and its main parts are illustrated in Figure 1-12 and Figure 1-13.

Earthing

The signal processing electronics in Advant OCS are normally earthed to chassis and all interference suppression for external signals refers to chassis. If this rule is broken, the system is sensitive to high-frequency interference, mainly interference from unsuppressed relays, to contactors and to discharge of static electricity.

Power Supply for Field Equipment

Auxiliary equipment in the controlled system is normally powered separately. This means separate power supply units and fusing. However, given a small current requirement, and if you follow the rules given in Section 3.1, Design Considerations, you can also use the system power supply unit for field equipment.

The series of power supply units listed in Table 1-12 is, of course, generally applicable.

1.7.6 Process Interface

An Advant Controller 450 communicates with the process through various types of sensors and actuators connected to process interface units. Three variants of the I/O system are offered, S100 I/O, S400 I/O and S800 I/O. The I/O systems are optimized for different use.

As the short presentation below illustrates, the S100 I/O is the most complete system with respect to special functions.

Process events can be time-tagged. The time accuracy is determined by the applied I/O system and the selected board type.

Cabling represents a large portion of the cost of installing a process control system. In order to reduce this cost, a range of distributable I/O units (S400 I/O and S800 I/O) are available covering the most common process signal types. The distributable I/O units communicate with the controller through MasterFieldbus (S400 I/O) and Advant Fieldbus 100 (S800 I/O).

Large S100 I/O cluster can be distributed too by using an optical S100 bus extension.
This facilitates for example the location of I/O cabinets close to a remote switch gear.

It is, of course, possible to mix the different I/O systems in the same application if you wish.

This manual gives an overall presentation of the I/O systems. Since the I/O systems are common to several Advant Controller products, the detailed information is collected in separate documents as follows.

- S100 I/O: Hardware descriptions and technical data of I/O boards, connection units and the S100 I/O bus extension.
  - S100 I/O Hardware, Reference Manual.
- S400 I/O: System description, hardware description and technical data of I/O units and MasterFieldbus.
  - MasterFieldbus and S400 I/O, User's Guide.
- S800 I/O: System description, hardware description and technical data of I/O modules and Advant Fieldbus 100.
  - Advant Fieldbus 100, User's Guide
  - S800 I/O User's Guide.

Function descriptions, including configuration-application building information on I/O boards and signals, which are applicable to the actual Advant Controller, are found in separate documents as well. Please refer to either of these two documents:

- *Data Base Elements, Advant Controller 400 Series, Reference Manual*
- *Functional Units part 2, Reference Manual.*

General Signal Paths

The input and output signals can be in digital or in analog form (current or voltage signals). Figure 1-16 and Figure 1-17 shows, in principle, the layout of the signal paths for the input and output signals for the different I/O systems. The signal paths are built up of the following units, which are described in principle below.

S100 I/O:

- External signal cable
- Connection unit
- Internal cable
- I/O board
- Bus extension to S100 I/O
- Internal system bus.

S400 I/O:

- External signal cable
- I/O unit
- MasterFieldbus LDB (long-distance bus)
  - Bus cable
  - Modem.
- MasterFieldbus SDB (short-distance bus)
- Modem/Connection Unit TC570
- Communication module for MasterFieldbus
- Internal system bus.

S800 I/O:

- External signal cable
- Module Terminal Unit (MTU)
- I/O module
- Fieldbus Communication Interface (FCI)
- Advant Fieldbus 100
- Communication module for Advant Fieldbus 100
- Internal system bus.

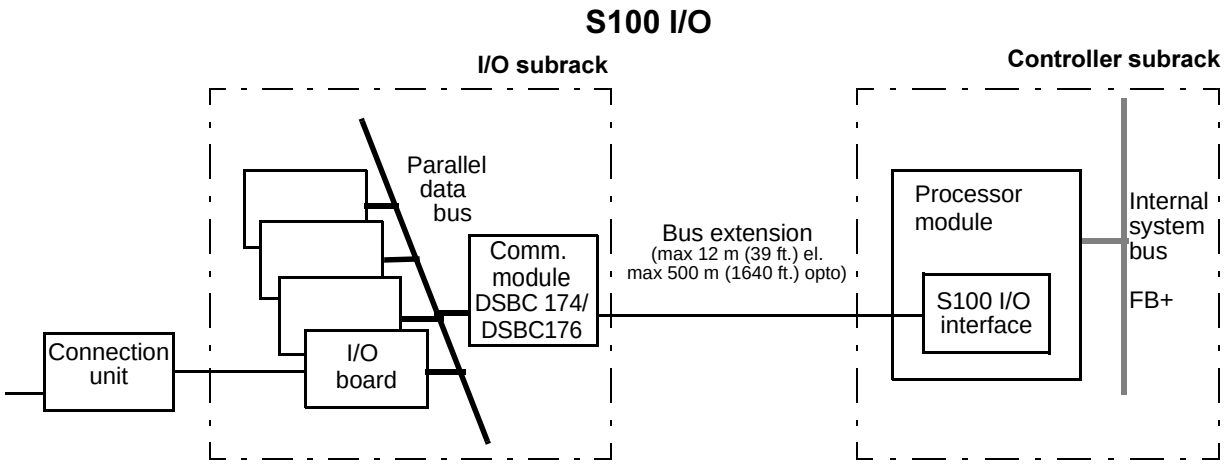

Figure 1-16. Input and Output Signal Paths (in principle)

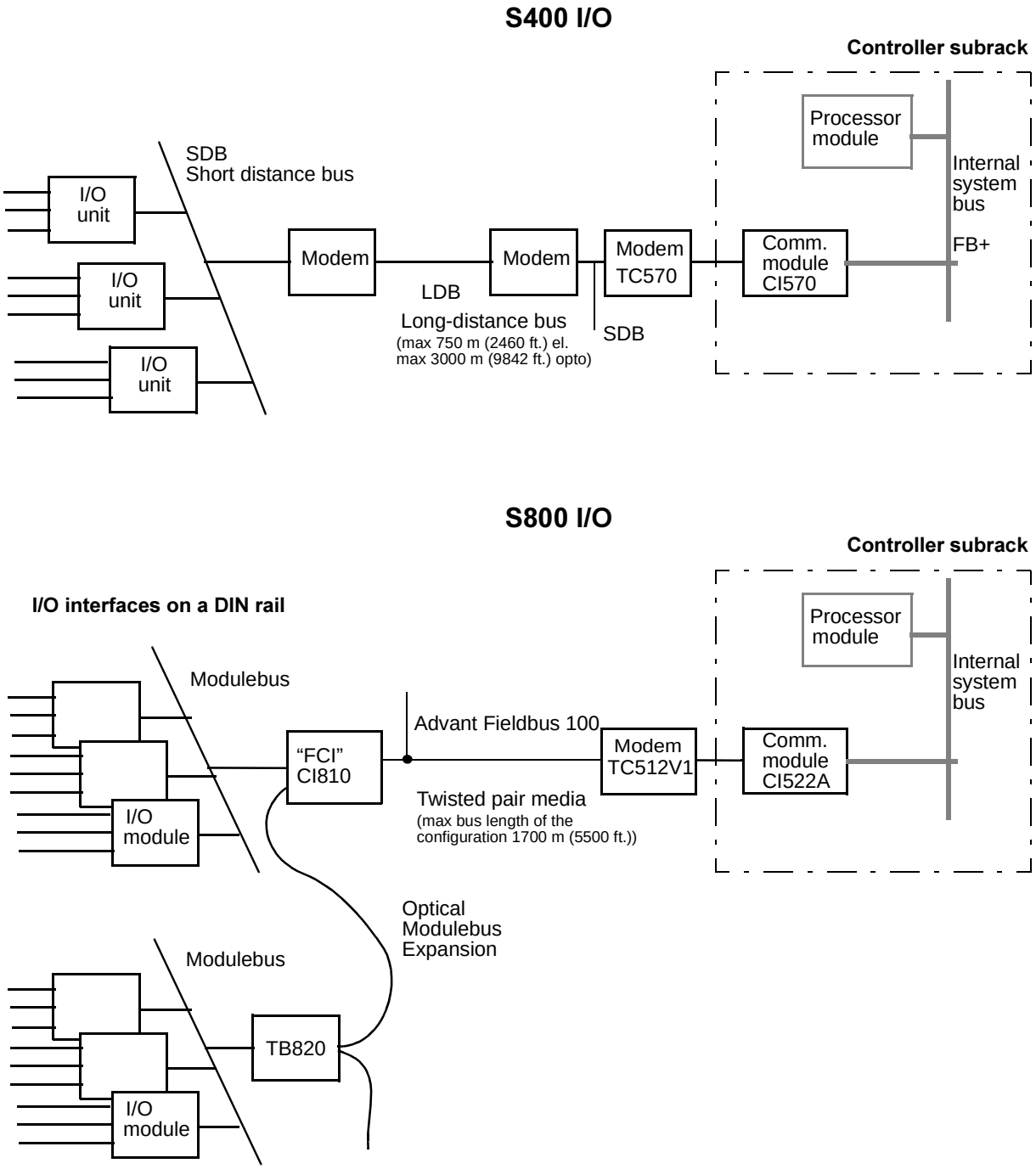

FCI - Fieldbus Communication Interface

Figure 1-17. Input and Output Signal Paths (in principle)

External Signal Cable

The process cables are connected to screw terminals (terminal blocks) on the connection units or directly to the I/O units.

Connection Unit (S100 I/O)

The connection unit consists of a circuit board which is to be located on a mounting bar in the backplane of the cabinet. See example in Figure 1-18.
You can distribute the connection unit 3 - 15 m if you use shielded cables to join the I/O board.
Mounting bars are available in two models for 19-inch and 24-inch widths.
Connection units have different widths. For dimensions and other technical data, see the *S100 I/O Hardware, Reference Manual*.

A connection unit is provided with terminal blocks to connect external signal cables.
Normally, a connection unit has additional terminals for power distribution to sensors and actuators. Generally, you can disconnect the terminals individually or group by group to isolate the I/O channels from the process for fault tracing and test measurements.
Circuits for interference suppression, fuses and, for analog inputs, a shunt resistor, are located on the connection unit. The shunt resistor is located so that you can replace an analog input board without breaking any current loops.

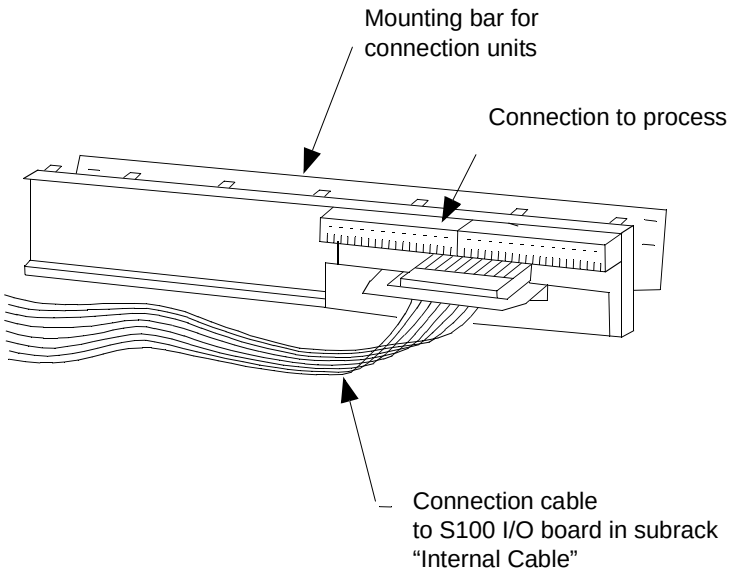

Figure 1-18. Example of Connection Unit for S100 I/O

A connection unit relates to an I/O board in different ways. The basic arrangement is that one connection unit corresponds to a specific I/O board. Sometimes two or more connection units are used to adapt to a single I/O board application. For example, the need of different rated input voltages to a digital input multi-channel board.

Two I/O boards of different categories (for example, DI and DO) are used to support an object oriented type of connection unit. An object oriented connection unit facilitates the connection of field cables without using any marshalling or process cable slit-up. Process objects like motors

and valves utilizing both ordering and indicating signals are joined with the control system in a rational and uniform way. Figure 1-19 gives an example of application.

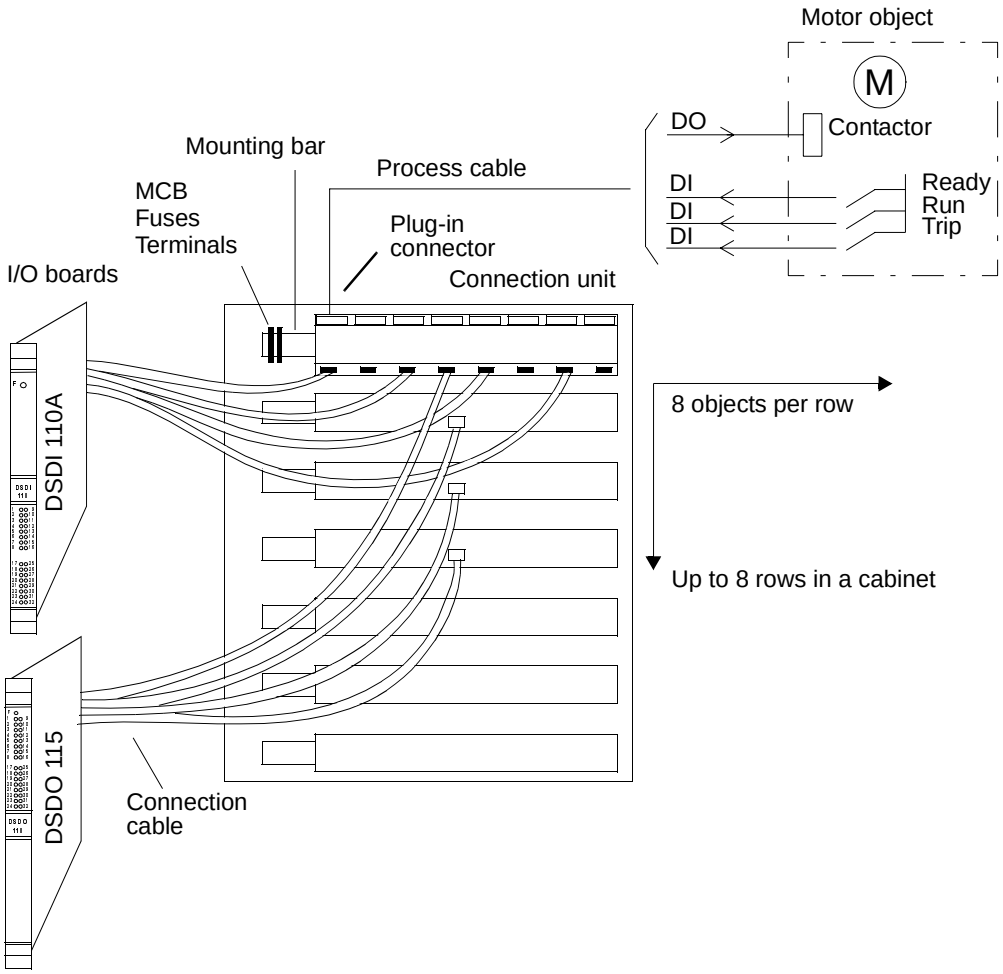

Figure 1-19. Application of Object Oriented Connection of S100 I/O

Internal Cable in S100 I/O

The connection units and I/O boards are joined by prefabricated cables. Ribbon cable is used to connect I/O boards intended for currents under 1 A and voltages under 60 V. Shielded cable is used for signals particularly sensitive to interference.

I/O Board (S100 I/O)

I/O boards convert incoming electrical signals from the process controlled, so that they can be further processed in the processor module. Outgoing signals are adapted to their functions in the process. I/O boards are divided into the following groups:

- Digital input boards
- Digital output boards
- Analog input boards
- Analog output boards
- Pulse counter/frequency measurement boards
- Positioning boards
- Others.

Connection units and wiring which connects boards and connection units are associated with each I/O board.

You can exchange I/O boards while the system is running. You can also insert new boards live, provided they are predefined in the data base. A newly inserted board is taken into operation within 10 seconds.

I/O Unit (S400 I/O)

An I/O unit in the S400 I/O system corresponds to an I/O board in S100 I/O.
I/O units are divided into the following groups:

- Digital basic units
- Digital expansion units
- Analog units.

You can connect process cables directly to the I/O unit's terminal blocks.

You can exchange an I/O unit while the system is running. You can also install new I/O units live, provided they are predefined in the data base. A newly inserted I/O unit is taken into operation within 10 seconds.

I/O Module (S800 I/O)

An I/O module in the S800 I/O system corresponds to an I/O board in S100 I/O.
I/O modules are divided into the following groups:

- Digital modules
- Analog modules.
- Pulse counter / frequency measurement module
- Digital and analog modules with Intrinsically safe interface
- Analog modules with Intrinsically safe interface and HART communication.

You can connect process cables directly to the I/O module's terminal blocks.

You can exchange an I/O module while the system is running. You can also install new I/O modules live, provided they are predefined in the data base and there is a free Module Termination Unit of right type in the station. A newly inserted I/O module is taken into operation within 10 seconds.

Intrinsic Safety Barriers (S100 I/O)

Hazardous applications may use barriers between the standard electronics and the equipment located in hazardous atmosphere. Certain barrier brands provide rational connection facilities adapted to the Advant Controller 400 Series thus making these brands especially advisable.

The basic principle is to replace the connection units of the S100 I/O System with termination boards housing the intrinsically safe isolator modules. The Advant Controller 400 and the intrinsically safe equipment are always delivered in separate cabinets.

You are referred to the separate documentation *Intrinsic Safety Support for S100 I/O System.*

HART Interface (S100 I/O)

Intelligent transducer using the Highway Addressable Remote Transducer protocol (HART) may be applied in an Advant Controller 400 installation utilizing the S100 I/O System. External products and a PC-compatible complement the Advant Controller, thus making an integrated solution.

The principles of connection is illustrated in Figure 1-20. Otherwise you are referred to the separate documentation *HART Protocol Interface to the Advant Controller 400 Series Controllers.*

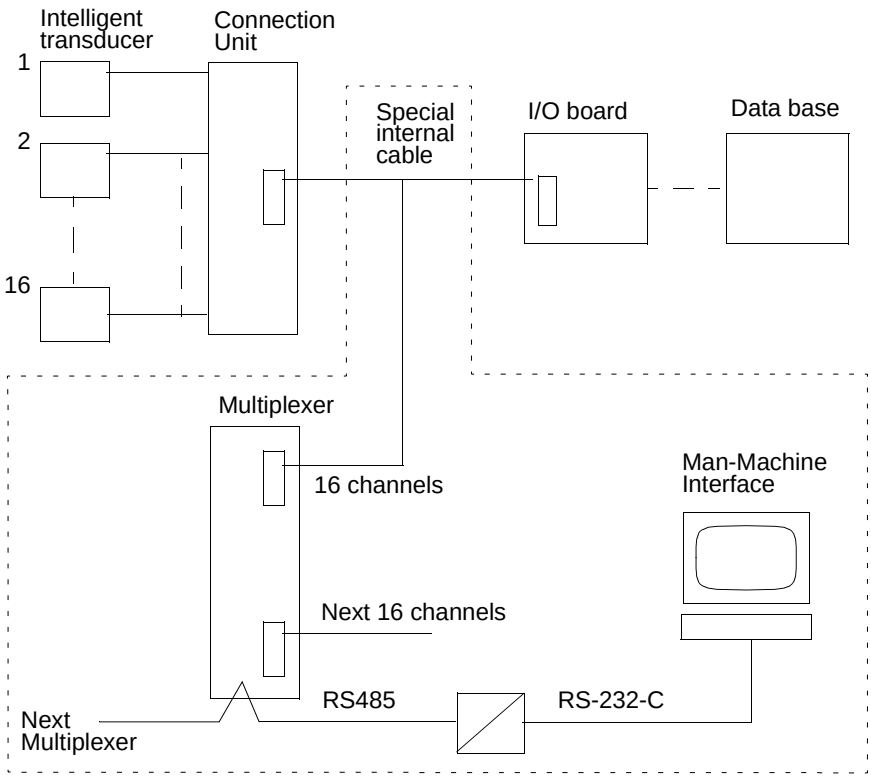

Figure 1-20. Principle of HART Implementation

HART Interface (S800 I/O)

Intelligent transducer using the HART protocol may be applied in an Advant Controller 400 installation utilizing the S800 I/O System. S800 I/O modules supporting HART together with an Advant Control Configurator tool version supporting HART and its integrated HART configuration tools are conditions for this function. HART specific data is not available in Advant Controller 450 which is acting as a router between the S800 I/O modules and the HART configuration tool. The principle is illustrated in Figure 1-21.

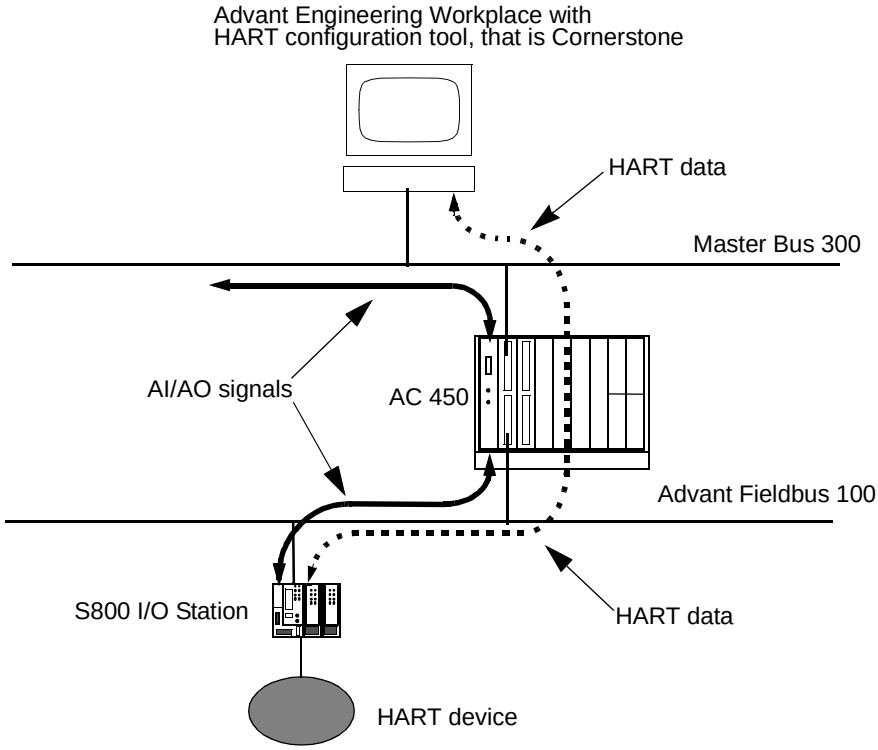

Figure 1-21. Principle of HART implementation using S800 I/O

1.7.6.1 S100 I/O

S100 I/O is the group of input and output boards located in the I/O subrack. The I/O subrack communicates with the controller subrack using Bus Extension to S100 I/O. Single and redundant Bus Extension to S100 I/O are available. Redundant S100 I/O Bus Extension requires redundant processor module. Electrical and optical bus extensions are provided. See the outline presentation of the bus extension in Section 1.7.7, Communication or to the separate documentation mentioned.

Information in this section is divided according to the different categories of boards and subdivided into **Main Points**, available **Board Types** and a signal **Block Diagram**.

Regarding connection units and internal cables used in the hazardous and HART applications you are referred to the separate documentation.

Digital Input, Main Points

- All digital inputs are opto-isolated from the system potential.
  Grouping of channels, with respect to isolation, can exist. See information given with the actual board type and connection unit type.
- You can select the mode of data base updating, either by interrupts or by scanning.
  The scan cycle times are normally selected from the range 10 ms to 2 s.
- Some boards offer pulse extension, for example to avoid rapid scanning of push buttons.
- The input signals are filtered on the input board to suppress the effects of electrical interference or bouncing contacts. The filter time is fixed to 5 ms or configurable depending on board type selected.
- Board types offering interrupt-controlled scanning are most suitable to get time-tagged events.

Digital Input, Board Types

Table 1-13 presents available digital input boards.

Table 1-13. Digital Input Boards

Board type	Description	Connection unit	Cable
DSDI 110A	32 (4 x 8) channels, 24 V d.c., controlled by scanning or interrupt	DSTD 150A / DSTD 190	DSTK 221L3
DSDI 110AV1	32 (4 x 8) channels, 24 V d.c., controlled by scanning or interrupt	DSTD 150A / DSTD 190V1	DSTK 221L3

Table 1-13. Digital Input Boards (Continued)

Board type	Description	Connection unit	Cable
DSDI 110A	32 (4 x 8) channels, 24 V d.c., controlled by scanning or interrupt	Variants below provide various rated input voltages, all channels galvanically isolated: 24 V d.c., 4 x DSTD 195 (1) 120 V a.c., 4 x DSTD 197 (1) 230 V a.c., 4 x DSTD 198 (1)	 DSTK 226L3 DSTK 226L3 DSTK 226L3
DSDI 110AV1	32 (4 x 8) channels, 24 V d.c., controlled by scanning or interrupt	Variants below provide various rated input voltages, all channels galvanically isolated: 24 V d.c., 4 x DSTD 195 (2) 120 V a.c., 4 x DSTD 197 (2) 230 V a.c., 4 x DSTD 198 (2)	 DSTK 226L3 DSTK 226L3 DSTK 226L3
DSDI 110A	32 (4 x 8) channels, 24 V d.c., controlled by scanning or interrupt	24 V d.c. 4 x DSTD 196 (1) This connection unit provides 48 V d.c. over open sensor contact.	DSTK 226L3
DSDI 110AV1	32 (4 x 8) channels, 24 V d.c., controlled by scanning or interrupt	24 V d.c. 4 x DSTD 196P (2) This connection unit provides 48 V d.c. over open sensor contact.	DSTK 226L3
DSDI 110A	32 (4 x 8) channels, 24 V d.c., controlled by scanning or interrupt.	Variants below provide object oriented connection to DSDI 110A and DSDO 115, various rated input voltages: 24 V d.c. DSTD 145 120 V a.c. DSTD 147 230 V a.c. DSTD 148	 DSTK 226L5 DSTK 226L5 DSTK 226L5
DSDI 110AV1	32 (4 x 8) channels, 24 V d.c., controlled by scanning or interrupt.	Variants below provide object oriented connection to DSDI 110AV1 and DSDO 115A, various rated input voltages: 24 V d.c. DSTD 145 120 V a.c. DSTD 147 230 V a.c. DSTD 148	 DSTK 226L5 DSTK 226L5 DSTK 226L5

Table 1-13. Digital Input Boards (Continued)

Board type	Description	Connection unit	Cable
DSDI 120A	32 channels, 48 V d.c., controlled by scanning or interrupt.	DSTD 150A / DSTD 190	DSTK 221L3
DSDI 120AV1	32 channels, 48 V d.c., controlled by scanning or interrupt.	DSTD 150A / DSTD 190V1	DSTK 221L3

(1) Optionally, you can combine the connection units DSTD 195, DSTD 196, DSTD 197 and DSTD 198 for their respective board.
(2) Optionally, you can combine the connection units DSTD 195, DSTD 196P, DSTD 197 and DSTD 198 for their respective board.

Digital Input, Block Diagram

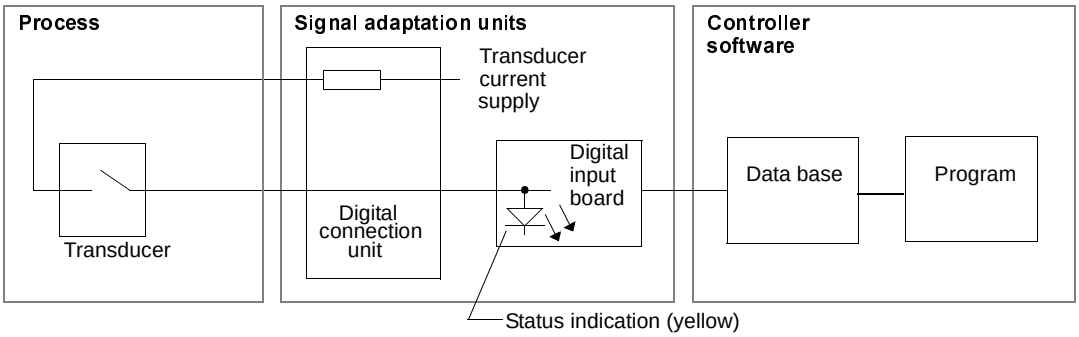

Figure 1-22. Digital Input Signal, Block Diagram

Digital Output, Main Points

- All digital outputs are galvanically isolated from the system potential by means of relays or opto-couplers.
  Grouping of channels, with respect to isolation, can exist. Please refer to information given with the actual board type and connection unit type.
- Transistor- and relay -type outputs are available.
- There are low-power relay outputs for currents < 100 mA.

Digital Output, Board Types

Table 1-14 presents available digital output boards.

Table 1-14. Digital Output Boards

Board type	Description	Connection unit	Cable
DSDO 115	32 channels, 24 V d.c.	4 x DSTD 108 / DSTD 108L (1) These connection units provide 8 relay outputs each, 24 - 250 V a.c./ d.c. max 3 A.	DSTK 226L3
DSDO 115A	32 channels, 24 V d.c.	4 x DSTD 108P / DSTD 108LP (1) These connection units provide 8 relay outputs each, 24 - 250 V a.c./ d.c. max 3 A.	DSTK 226L3
DSDO 115	32 channels, 24 V d.c.	Variants below provides object oriented connection to DSDI 110A and DSDO 115, various rated input voltages: 24 V d.c. DSTD 145 120 V a.c. DSTD 147 230 V a.c. DSTD 148 These connection units include 8 relay outputs each, 24 - 250 V a.c./ d.c. max 3 A.	 DSTK 226L5 DSTK 226L5 DSTK 226L5
DSDO 115A	32 channels, 24 V d.c.	Variants below provides object oriented connection to DSDI 110AV1 and DSDO 115A, various rated input voltages: 24 V d.c. DSTD 145 120 V a.c. DSTD 147 230 V a.c. DSTD 148 These connection units include 8 relay outputs each, 24 - 250 V a.c./ d.c. max 3 A.	 DSTK 226L5 DSTK 226L5 DSTK 226L5
DSDO 115	32 channels, 24 V d.c., short-circuit protected, transistor output, max. 150 mA	DSTD 110A / DSTD 190	DSTK 221L3

Table 1-14. Digital Output Boards

Board type	Description	Connection unit	Cable
DSDO 115A	32 channels, 24 V d.c., short-circuit protected, transistor output, max. 150 mA	DSTD 110A / DSTD 190V1	DSTK 221L3
DSDO 120A	16 channels, 24/48 V d.c, transistor output, max. 1 A	DSTD 120A	DSTK 220L3,2

(1) DSTD 108L is used for low-current loads (max. 200 mA).

Digital Output, Block Diagram

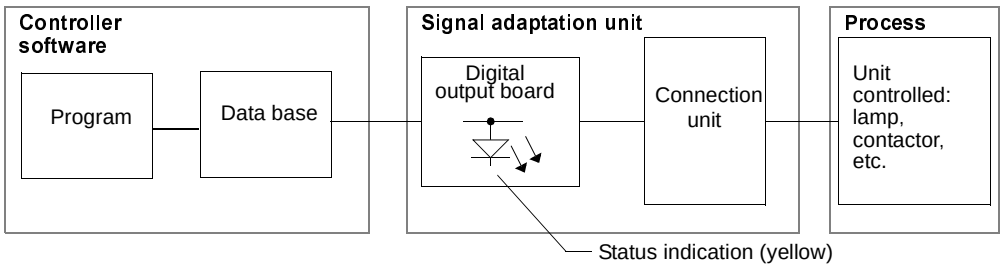

Figure 1-23. Digital Output Signal, Block Diagram

Analog Input for Standard Signal, Main Points

- Input units are available for standard voltage or current signals, single-ended or differential, with or without live zero.
- An isolation amplifier is available in the form of a connection unit. The isolation voltage is 3 kV.
- Some board has reference channels for automatic calibration and testing.
- The data base is updated by scanning, with cycle times normally selected from the range 100 ms to 600 s.
- Optional software filtering, square-root linearization and deadband limits for updating can be selected.
- Optional redundancy. Two types of boards can be duplicated to achieve increased availability.
- A board is offered which combines analog inputs and analog outputs (loop dedicated I/O).

Analog Input for Pt 100, Main Points

- Different temperature ranges for optimization of measurement accuracy.
- A 13-bit resolution unit is available. This very high resolution requires special precautions when it comes to cabling. The unit can optionally be used with 12-bit resolution.

- Each board has built-in reference channels for automatic calibration and testing.
- The data base is updated by scanning, with cycle times normally selected from the range 100 ms to 600 s.
- The suppression frequency is selectable from 20, 30, 50 and 60 Hz.
- The current generators for sensors deliver 2.5 mA, in accordance with DIN 43760.
- Optional software filtering and deadband limits for updating can be selected.

Analog Input for Thermocouple, Main Points

- Thermocouple inputs are available for different sensor types.
- Each board has built-in reference channels for automatic calibration and testing.
- The data base is updated by scanning, with cycle times normally selected from the range 100 ms to 600 s.
- Optional software filtering and deadband limits for updating can be selected.

Analog Input, Board Types

Table 1-15 presents available analog input boards.

Table 1-15. Analog Input Boards

Board type	Description	Connection unit	Cable
DSAI 130	16 channels, differential inputs, resolution 12 bits + sign, 0 to ±10 V, 0 to ±5 V, 0 to ±2.5 V, 0 to ±1.25 V or 0 to ±20 mA, 0 to ±10 mA, 0 to ±5 mA, 4 to 20 mA (elevated zero obtained by SW) shunt 250 Ω 0.1%, CMV 100 V	DSTA 131	DSTK 221L3
DSAI 130A	16 channels, differential inputs, resolution 12 bits + sign, 0 to ±10 V, 0 to ±5 V, 0 to ±2.5 V, 0 to ±1.25 V or 0 to ±20 mA, 0 to ±10 mA, 0 to ±5 mA, 4 to 20 mA (elevated zero obtained by SW) shunt 250 Ω 0.1%, CMV 50 V	DSTA 131	DSTK 221L3
DSAI 130	Eight differential and eight directly grounded inputs (single ended), transducer supply fused channel by channel, resolution 12 bits, 0 to ±10 V, 0 to ±5 V, 0 to ±2.5 V, 0 to ±1.25 V or 0 to ±20 mA, 0 to ±10 mA, 0 to ±5 mA, 4 to 20 mA (elevated zero obtained by SW) shunt 250 Ω 0.1%, CMV 100 V	DSTA 133	DSTK 221L3

Table 1-15. Analog Input Boards (Continued)

Board type	Description	Connection unit	Cable
DSAI 130A	16 differential and eight directly grounded inputs (single ended), transducer supply fused channel by channel, resolution 12 bits, 0 to ±10 V, 0 to ±5 V, 0 to ±2.5 V, 0 to ±1.25 V or 0 to ±20 mA, 0 to ±10 mA, 0 to ±5 mA, 4 to 20 mA (elevated zero obtained by SW) shunt 250 Ω 0.1%, CMV 50 V	DSTA 135	DSTK221L3
DSAI 130	16 channels, differential inputs, resolution 12 bits + sign, 0 to ±10 V, 0 to ±5 V, 0 to ±2.5 V, 0 to ±1.25 V or 0 to ±20 mA, 0 to ±10 mA, 0 to ±5 mA, 4 to 20 mA (elevated zero obtained by SW) shunt 250 Ω 0.1%, CMV 100 V	DSTA 137 provides object oriented connection to DSAI 130 and DSAO 130	DSTK 150
DSAI 130A	16 channels, differential inputs, resolution 12 bits + sign, 0 to ±10 V, 0 to ±5 V, 0 to ±2.5 V, 0 to ±1.25 V or 0 to ±20 mA, 0 to ±10 mA, 0 to ±5 mA, 4 to 20 mA (elevated zero obtained by SW) shunt 250 Ω 0.1%, CMV 50 V	DSTA 138 provides object oriented connection to DSAI 130A and DSAO 130A	DSTK 150
DSAI 133	32 channels, directly grounded inputs (single ended), transducer supply fused channel by channel, resolution 12 bits unipolar, 0 to + 10 V, 0 to + 5 V, 0 to + 20 mA, 4 to 20 mA (elevated zero obtained by SW) shunt 250 Ω 0.05%	2 x DSTA 002A	DSTK 222L3
DSAI 133A	32 channels, directly grounded inputs (single ended), transducer supply fused channel by channel, resolution 12 bits unipolar, 0 to + 10 V, 0 to + 5 V, 0 to + 20 mA, 4 to 20 mA (elevated zero obtained by SW) shunt 250 Ω 0.05%	2 x DSTA 002B	DSTK 222L3
2 x DSAI 133	DSAI 133 in redundant coupling. Data otherwise the same as for DSAI 133 above.	2 x DSTA 002A (1)	2 x DSTK 222L3
2 x DSAI 133A	DSAI 133 in redundant coupling. Data otherwise the same as for DSAI 133 above.	2 x DSTA 002B (1)	2 x DSTK 222L3
DSAI 146	31 channels (+ one ref. channel) for Pt100, three-wire, resolution, 12 bits + sign, -100 to +320°C or -200 to +640°C	DSTA 145	DSTK 229SL3

Table 1-15. Analog Input Boards (Continued)

Board type	Description	Connection unit	Cable
DSAI 155A	14 channels (+ two ref. channels + one comp. channel) for thermocouples, resolution 12/13 bits + sign, measurement range: B, C, E, J, K, R, S and T for insulate thermocouples	DSTA 156 DSTA 155	DSTK 225SL3
DSAI 155A	14 channels (+ two ref. channels + one comp. channel) for thermocouples, resolution 12/13 bits + sign, measurement range: B, C, E, J, K, R, S and T for insulate thermocouples	DSTA 156B DSTA 155P	DSTK 225SL3
DSAX 110	**Analog input:** Eight channels, directly grounded inputs (single ended) resolution 12 bits unipolar 0 to + 10 V or 0 to + 20 mA, 4 to 20 mA (elevated zero obtained by SW) shunt 250 Ω 0.05% **Analog output:** Eight channels, resolution 12 bits unipolar 0 to + 20 mA, 4 to 20 mA (elevated zero obtained by SW) 0 to + 10 V (over shunt 500 Ω 0.1% on DSTA 001A)	DSTA 001A	DSTK 223L3
DSAX 110A	**Analog input:** Eight channels, directly grounded inputs (single ended) resolution 12 bits unipolar 0 to + 10 V or 0 to + 20 mA, 4 to 20 mA (elevated zero obtained by SW) shunt 250 Ω 0.05% **Analog output:** Eight channels, resolution 12 bits unipolar 0 to + 20 mA, 4 to 20 mA (elevated zero obtained by SW) 0 to + 10 V (over shunt 500 Ω 0.1% on DSTA 001B)	DSTA 001B	DSTK 223L3
2 x DSAX 110	Redundant coupling. Data otherwise the same as for DSAX 110 above.	DSTA 001A	2 x DSTK 223L3
2 x DSAX 110A	Redundant coupling. Data otherwise the same as for DSAX 110 above.	DSTA 001B	2 x DSTK 223L3

(1) Two connection units are used due to space requirement.

Analog Input, Block Diagram

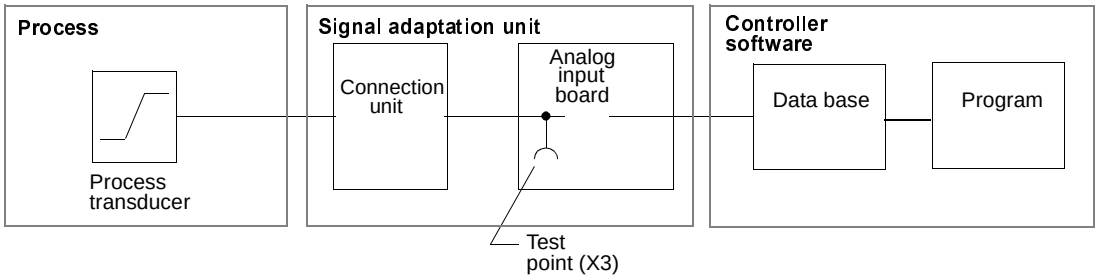

Figure 1-24. Analog Input Signal, Block Diagram

With redundancy, the pair of boards is treated as an individual in the data base.
A common connection unit connects the singular process object (transducer, actuator).

Figure 1-25 illustrates an application with redundancy.

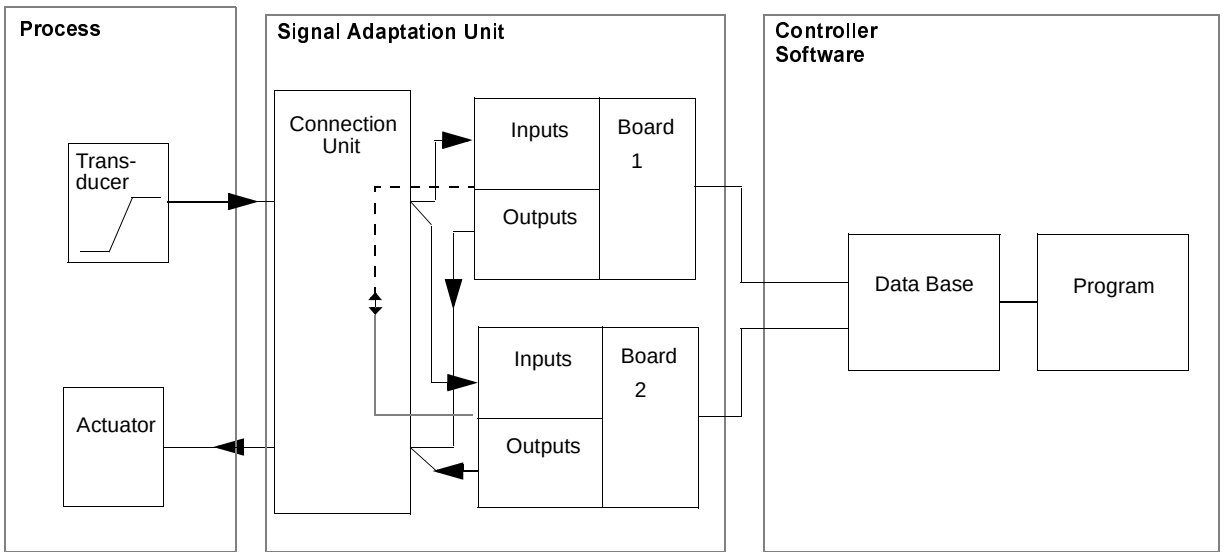

Figure 1-25. Analog Input/Output Signal with Redundancy, Block Diagram

Analog Output, Main Points

- Analog outputs are available for standard voltage and current signals.
- There are both isolated and non-isolated outputs.
- Optional redundancy is featured, where one type of board can be duplicated to achieve increased availability.
- A board is offered which combines analog inputs and analog outputs (loop dedicated I/O).
- An output is read out each time new values are entered into the data base.
- Optional software limitations can be selected.

Analog Output, Board Types

Table 1-16 presents available analog output boards.

Table 1-16. Analog Output Boards

Board type	Description	Connection unit	Cable
DSAO 110	Four channels, resolution 12 bits incl. sign, 0 to ±10 V or 0 to ±20 mA, 0 to ±10 mA, 4 to 20 mA (elevated zero obtained by SW) galvanic isolation, channel by channel	DSTA 160	DSTK 223L3
DSAO 120	Eight channels, resolution 12 bits incl. sign, 0 to ±10 V or 0 to ±20 mA 4 to 20 mA (elevated zero obtained by SW)	DSTA 170	DSTK 223L3
DSAO 120A	Eight channels, resolution 12 bits incl. sign, 0 to ±10 V or 0 to ±20 mA 4 to 20 mA (elevated zero obtained by SW)	DSTA 171	DSTK 223L3
DSAO 130	16 channels, resolution 8 bits unipolar 0 to + 10 V or 0 to + 20 mA, 0 to + 10 mA 4 to 20 mA (elevated zero obtained by SW)	DSTA 180	DSTK 221L3
DSAO 130A	16 channels, resolution 8 bits unipolar 0 to + 10 V or 0 to + 20 mA, 0 to + 10 mA 4 to 20 mA (elevated zero obtained by SW)	DSTA 181	DSTK 221L3
DSAO 130	16 channels, resolution 8 bits unipolar 0 to + 10 V or 0 to + 20 mA, 0 to + 10 mA 4 to 20 mA (elevated zero obtained by SW)	DSTA 137 provides object oriented connection to DSAI 130 and DSAO 130	DSTK 150

Table 1-16. Analog Output Boards (Continued)

Board type	Description	Connection unit	Cable
DSAX 110	**Analog input:** Eight channels, directly grounded inputs (single ended) resolution 12 bits unipolar 0 to + 10 V, 0 to + 20 mA, 4 to 20 mA (elevated zero obtained by SW) shunt 250 Ω 0.05% **Analog output:** Eight channels, resolution 12 bits unipolar 0 to + 20 mA, 4 to 20 mA (elevated zero obtained by SW) 0 to + 10 V (over shunt 500 Ω 0.1% on DSTA 001)	DSTA 001A	DSTK 223L3
DSAX 110A	**Analog input:** Eight channels, directly grounded inputs (single ended) resolution 12 bits unipolar 0 to + 10 V, 0 to + 20 mA, 4 to 20 mA (elevated zero obtained by SW) shunt 250 Ω 0.05% **Analog output:** Eight channels, resolution 12 bits unipolar 0 to + 20 mA, 4 to 20 mA (elevated zero obtained by SW) 0 to + 10 V (over shunt 500 Ω 0.1% on DSTA 001)	DSTA 001B	DSTK 223L3
2 x DSAX 110	Redundant coupling. Data otherwise the same as for DSAX 110 above.	DSTA 001A	2 x DSTK 223L3
2 x DSAX 110	Redundant coupling. Data otherwise the same as for DSAX 110 above.	DSTA 001B	2 x DSTK 223L3

Analog Output, Block Diagram

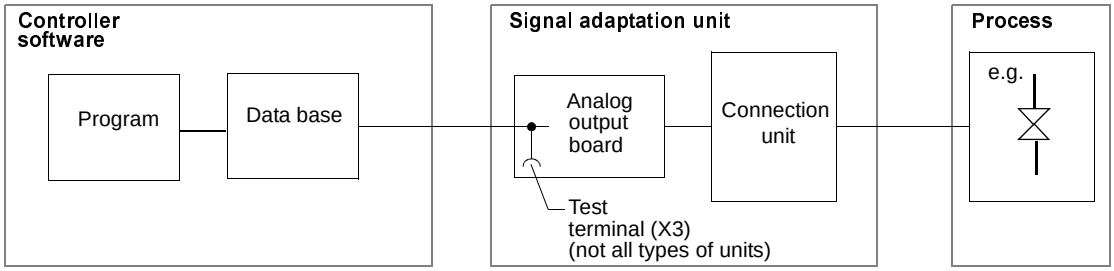

Figure 1-26. Analog Output Signal, Block Diagram

Pulse Counting/Frequency Measurement, Main Points

- Pulse counter units are available for pulse counting and frequency measurement, for 5, 12 or 24 V d.c. inputs and frequencies up to 2.5 MHz.
- Scaling (conversion to process-related units).
- Optional software limitations can be selected.

Pulse Counting/Frequency Measurement, Board Types

Table 1-17 presents available boards.

Table 1-17. Pulse Counting/Frequency Measurement Boards

Board type	Description	Connection unit	Cable
DSDP 150	12 channels, 5/12/24 V d.c., max. 10 kHz	DSTD 150A / DSTD 190	DSTK 225SL3
DSDP 170	Four measurement systems each containing inputs for pulse generator: Two channels and strobe 5/12/24 V or ±13 mA, max. 2.5 MHz DI: 24 V d.c. DO: 24 V max. 250 mA d.c.	DSTX 170	DSTK 228L3

Pulse Counting/Frequency measurement, Block Diagram

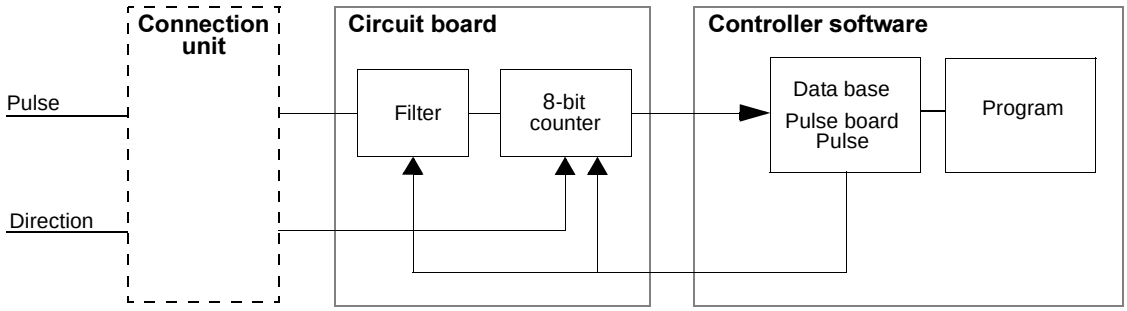

Figure 1-27. Pulse Counter Input Signal DSDP 110, Block Diagram

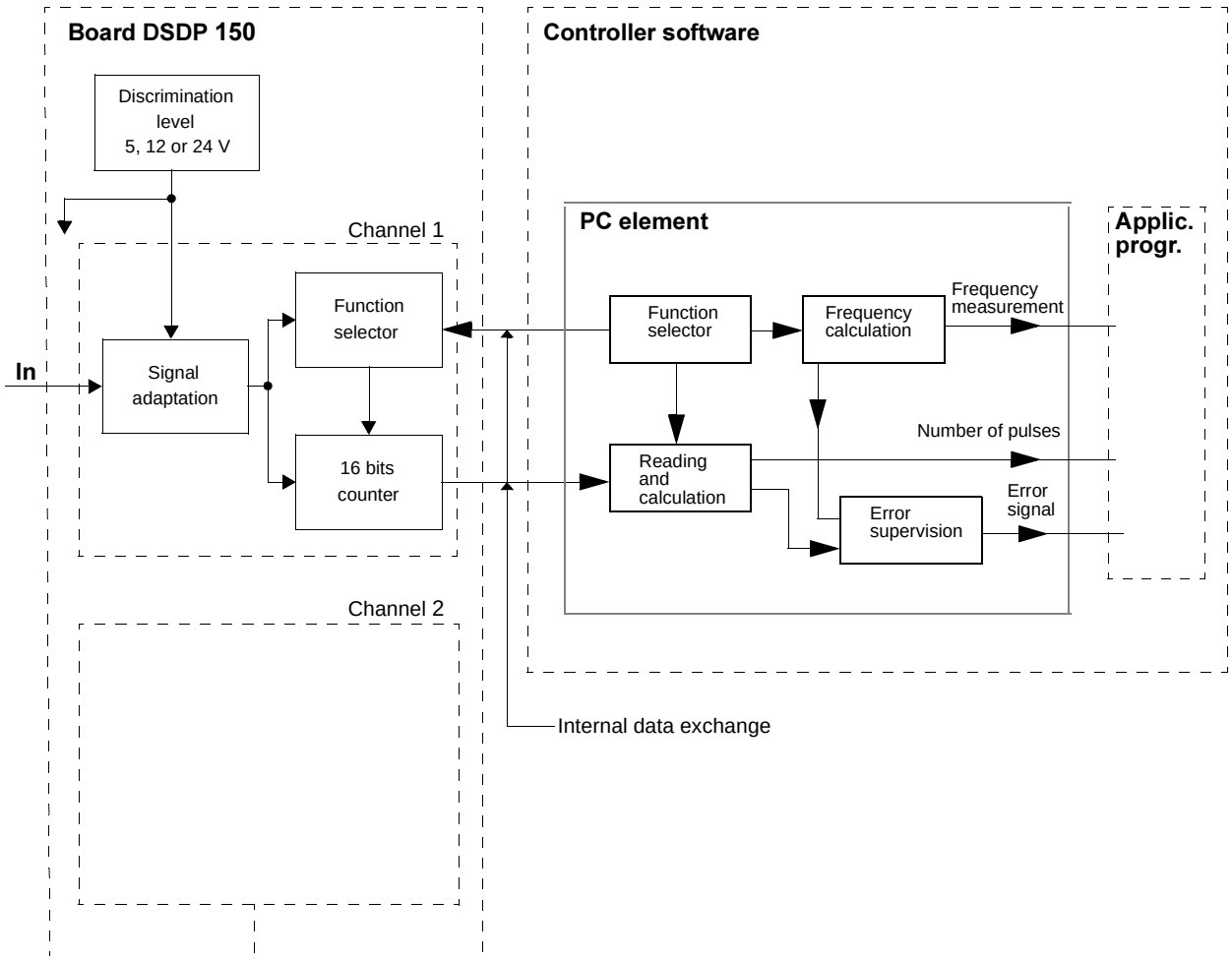

Figure 1-28. Pulse Counter Input Signal DSDP 150, Block Diagram

Positioning, Main Points

For further information on positioning, see Section 1.7.8.3, Control Functions, under the heading **Positioning** and see the *Positioning System User's Manual*.

Positioning, Board Types

Table 1-18 presents the available board.

Table 1-18. Positioning Board

Board type	Description	Connection unit	Cable
DSDP 140A	One positioning loop input for pulse generator: three channels, ±15 mA, max. 80 kHz DI/DO: 24 V d.c., AO: Resolution 11 bits + sign, 0 to + 10 V or 0 to ±20 mA	DSTD 150A / DSTD 190	DSTK 225SL3

Converter Connection, Main Points

For further information on converter connection, see Section 1.7.8.3, Control Functions, under the heading **Converter Connection**.

Converter Connection, Board Types

Table 1-19 presents the available board.

Table 1-19. Converter Connection Board

Board type	Description	Connection unit	Cable
DSDC 111	Eight DI + Sync. 24V d.c. Eight DO, 24 V d.c. Two AI AI one, resolution 9 bits + sign 0 to ±10V AI two, Ref. input to AO2 Three AO 0 to ±10V resolution: AO one, 11 bits + sign AO two, 9 bits + sign AO three, 9 bits + sign	DSTX 110	DSTK 224L3

1.7.6.2 S400 I/O

S400 I/O units communicate with the Advant Controller 450 using MasterFieldbus.
See the outline presentation of MasterFieldbus in Section 1.7.7, Communication or the separate documentation mentioned.

Process variables, connected via S400 I/O units and S100 I/O boards, are available in the process data base in the same way. The high performance of MasterFieldbus makes the delay in process scanning due to fieldbus communication negligible in most applications.
However, time-tagged events have comparatively reduced accuracy.

If an S400 I/O unit loses its contact with Advant Controller 450 for any reason, it enters "local mode." In this mode, it maintains its output signals at their most recent correct values or to a predetermined value, as selected by the user. These safe values are set in the Advant Controller 450 data base and transferred to the unit at start-up. Normal operation is resumed when the connection is re-established.

S400 I/O Units, Outline Description

A basic S400 I/O unit for binary signals has 32 channels. You can expand it with another 32 channels by adding an expansion unit. Analog units have 20 channels and cannot be expanded.

Basic units are ready for direct connection to MasterFieldbus. Expansion units are connected to the basic units by means of short ribbon cables.

The units are enclosed and equipped with a built-in power supply including a separate, isolated supply for sensors. The enclosure is in accordance with IEC 529, IP20. All external connections are made by plug detachable screw terminals. You can mount the units directly on a wall, or, more commonly, in a protective enclosure on a mounting plate, or on DIN mounting rails.

All units have LED indicators for power supply and communication. Digital units also have LEDs for indication of the status of each I/O channel.

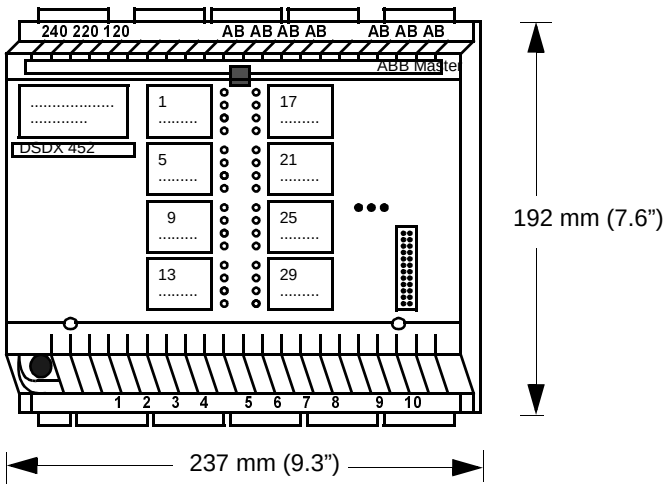

Figure 1-29. Example of basic I/O Unit, DSDX 452 - 20 Inputs and 12 Outputs

S400 I/O Units

Table 1-20. S400 I/O Units

S400 I/O units		Description
Digital basic units		
DSDX 452 DSDX 452L DSDX 454 DSDX 454L	DI: DO: Supply:	20 channels, 24 V d.c. for DSDX 452 and DSDX 452L 48 V d.c. for DSDX 454 and DSDX 454L 12 channels, relay output(1), expandable 120/220 (230)/240 (230) V a.c., 50/60 Hz
DSDI 452 DSDI 454	DI: Supply:	32 channels, 24 V d.c. for DSDI 452, 48 V d.c. for DSDI 454 120/220 (230)/240 (230) V a.c., 50/60 Hz
Digital expansion units		
DSDX 451 DSDX 451L DSDX 453 DSDX 453L	DI: DO: Supply:	20 channels, 24 V d.c. for DSDX 451 and DSDX 451L 48 V d.c. for DSDX 453 and DSDX 453L 12 channels, relay output, expandable 120/220 (230)/240 (230) V a.c., 50/60 Hz
DSDI 451 DSDI 453	DI: Supply:	32 channels, 24 V d.c. for DSDI 451 48 V d.c. for DSDI 453 120/220 (230)/240 (230) V a.c., 50/60 Hz
Analog units		
DSAX 452	AI: AO: Supply:	14 channels, differential 0 to ±10 V or 0 to ±20 mA, resolution 12 bits + sign 6 channels, unipolar 0 to + 10 V or 0 to + 20 mA, resolution 10 bits 120/220 (230)/240 (230) V a.c., 50/60 Hz

(1) Relay data for units without L in the type designation.
Loading: max. 3 A, min. 0.1 A with 24 V or 2.5 VA
Breaking capacity: a.c. max. 720 VA with $\cos\varphi$ >0.4, d.c. max. 44. 44 W with L/R <40 ms.

Relay data for units with L (outputs for low current)
Loading: min. 1 mA but min. 0.05 VA, max. 200 mA but max. 5 VA
Breaking capacity: a.c. max. 200 mA or 5 VA with $\cos\varphi$ >0.4, d.c. max. 200 mA or 5 W with L/R <40 ms.

1.7.6.3 S800 I/O

The S800 I/O provides distributed I/O to the Advant Controller 450 controller using the Advant Fieldbus 100 (AF 100). See the outline presentation of Advant Fieldbus 100 in Section 1.7.7, Communication or the separate documentation mentioned for all details.

Process variables, connected via S800 I/O modules and S100 I/O boards, are available in the process data base in the same way. The high performance of Advant Fieldbus 100 makes the delay in process scanning due to fieldbus communication negligible in most applications. However, time-tagged events have comparatively reduced accuracy for modules without internal sequence of event handling.

If an S800 I/O module loses its contact with Advant Controller 450 for any reason, it enters "local mode." In this mode, it maintains its output signals at their most recent correct values or to a predetermined value, as selected by the user. These safe values are set in the Advant Controller 450 data base and transferred to the unit at start-up. Normal operation is resumed when the connection is re-established.

Mechanics

The mechanics components of the S800 I/O are characterized by the following features:

- Highly modularized mechanics with four basic parts; Communication Interface modules (or Field Communication Interface module), Optical Modulebus modem, I/O modules and field wiring termination Units (MTUs) (Module Termination Units) which act as I/O module carriers. The communication interface modules, Optical Modulebus modem and MTUs are mounted on standard DIN-mounting rails according to DIN EN50033-35*15.
- All modules have plastic injection moulded enclosures which provide safety protection degree IP20 according to IEC 529.
- I/O modules are protected from destruction by a mechanical keying arrangement if an attempt is made to insert a module type in a position with a different key code than the factory set code of the I/O module. MTUs have keys which are set to key code of its I/O module's key code.

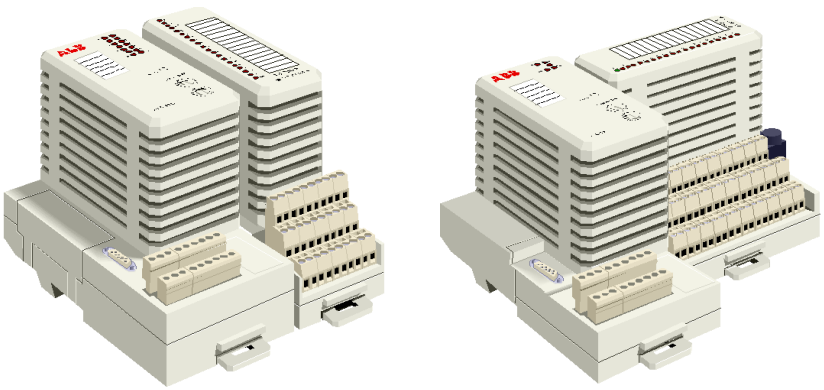

Figure 1-30. S800 I/O. Field Communication Interface with an I/O module on a Compact or Extended MTU.

S800 I/O Station

A S800 I/O Station can consist of a base cluster and up to 7 additional I/O clusters. The base cluster consists of a Fieldbus Communication Interface and up to 12 I/O modules.
I/O cluster 1 to 7 consist of an Optical Modulebus modem and up to 12 I/O modules.
A S800 I/O Station can have a maximum of 24 I/O modules. I/O cluster 1 to 7 are connected to the FCI module through an optical expansion of the Modulebus.

Modulebus

The Fieldbus Communication Interface module communicates with its I/O modules over the Modulebus. The Modulebus can support up to 8 clusters, one base cluster and up to 7 I/O clusters. The base cluster consists of a communication interface module and I/O modules. An I/O cluster consist of an Optical Modulebus modem and I/O modules. The Optical Modulebus modems are connected via optical cables to a optional Modulebus Optical port module on the communication interface module. The maximum length of the Optical Modulebus expansion is dependent of the number of Optical Modulebus modems. The maximum length between two clusters is 15 m (50 ft.) with plastic fibre and 200 m (667 ft.) with glass fibre. Factory made optical cables (plastic fibre) are available in lengths of 1.5, 5 and 15 m (5, 16 or 49 ft.). The Optical Modulebus expansion can be build up in two ways, a ring or a duplex communication.

Within a cluster the Modulebus is made up of increments integrated into each Module Termination Unit (MTU). Each communication interface module and Optical Modulebus modem has a Modulebus outlet connector to connect to a MTU. A MTU has a bus inlet and a bus outlet connector. By adding, on the DIN rail, a MTU to a communication interface module or an Optical Modulebus modem, the bus is automatically expanded, offering optional further expansion of MTUs to a maximum of 12 MTUs. Unique position codes are automatically assigned to each MTU as the bus is expanded. An inserted I/O module is assigned the unique position identity of its MTU. Through the incremental bus design the physical size of an S800 I/O installation is directly proportional to the number of installed MTUs.

MTUs and their associated I/O modules can within a cluster be set up in two or three physically separated groups with extension cable adaptors which fit to the bus outlet and inlet connectors of communication interface modules, Optical Modulebus modem and MTUs. The factory made extensions cables which plug into the cable adaptors are available in lengths of 0.3, 0.6 and 1.2 m (1, 2 or 4 ft.), allowing together with up to 12 I/O modules, for a total bus length of 2.5 meters (8.2 ft.).

The S800 I/O modules can be inserted and removed from MTUs without disturbing system operation. The physical lock which locks an I/O module to its MTU allows I/O module removal only when the lock is in its unlock position. The locking mechanism also acts as a logic lock so

that an I/O module is operable only when the lock is in the locked position. If the lock is in its unlocked position, output channels are de-energized and I/O modules can be inserted/removed without need to remove system or field power.

The MTUs are totally passive units and all active circuitry is allocated to the I/O module.

Fieldbus Communication Interface Modules

The Fieldbus Communication Interface (FCI) modules have an input for one 24 V d.c. power.

The FCI provides 24V d.c. (from the source) and an isolated 5V d.c. power to the base cluster's I/O modules (12 maximum) by way of the ModuleBus connections. There are three types of FCIs one for single Advant Fieldbus 100 configurations, one for redundant Advant Fieldbus 100 configurations and one for single PROFIBUS configurations. The power source can be the SD811/812 power supplies, battery, or other IEC664 Installation Category II power sources. Power status inputs, 2 x 24 V, to monitor 1:1 redundant mains are also provided.

The single Advant Fieldbus 100 FCI module have two connectors and built-in modems, for redundant AF 100 twisted pair cables, a connector for the Modulebus Optical port module and a galvanically isolated RS-232 service port to allow trouble free tools connection.

The redundant Advant Fieldbus 100 FCI module have one connector and built-in modem, for one AF 100 twisted pair cable and connectors to a connection unit. Two redundant FCI modules are connecting to each other via an Interconnection Unit (TB815). Connectors for electrical Modulebus, Modulebus Optical port module and two galvanically isolated RS-232 service ports are placed on the Interconnection Unit TB815 one for each FCI.

The AF 100 connector plugs can be inserted/removed without interrupting AF 100 communication between other stations.

The single PROFIBUS FCI module have one connector and built-in modems, for PROFIBUS twisted pair cables, a connector for the Modulebus Optical port module and galvanically isolated RS-232 service port to allow trouble free tools connection.

The front plate of the FCI modules provides LEDs for diagnostic and status indications. Two rotary switches are provided for setting of the station address. No other addresses are required to be set within the I/O-station. Labels for optional user text and item number are also provide.

Table 1-21. Communication Interface Module

Module type	Description
CI810A	AF 100 Fieldbus Communication Interface, 2 x AF 100 Modems for twisted pair cable. Power supply 24 V. Rated isolation voltage 50 V.
CI820	AF 100 Fieldbus Communication Interface for redundant configurations, 1x AF 100 Modems for twisted pair cable. Power supply 24 V. Rated isolation voltage 50 V.
TB815	Interconnection Unit for redundant FCI (CI820).
CI830	PROFIBUS Fieldbus Communication Interface, one Modems for twisted pair cable. Power supply 24 V. Rated isolation voltage 50 V.

I/O Interfaces

A range of I/O modules is available covering analog, pulse and digital signals of various types. Interfaces for RTDs and TCs of various types and modules with intrinsically safe interface and HART communication are available.

The S800 system provides I/O modules with typically 2, 4, 8 or 16 channels depending on type and ratings of the individual module.

All I/O modules are supervised at system start-up as well as under normal operation. The status of a module is indicated with front mounted LEDs; RUN (R), green, normal operation, FAULT (F), red, when a fault is detected, WARNING (W), yellow, when a channel fault is detected and OUTPUT SET AS PREDETERMINED (OSP), yellow, when the module has lost communication. Detailed status and diagnostics are available on the System Status Displays of the Operator Station.

All I/O modules can be replaced with both system power and field power connected.

Digital Modules

The digital I/O modules all have galvanic isolation relative to chassis ground. All modules have LEDs to indicate channel status (on/off) and the standard set of module status indicators. Some modules has also a LED per channel indicating fault.

24 V and 48V modules have two isolated groups with 8 channels.each Each group has a field power status input to indicate presence of field power. Loss of field power is indicated on Warning LED and channel status set to error. 120/250 V and modules with intrinsically safe interface modules have individually isolated channels. The input module can be configured to monitor field power status. Outputs do not need external inductive load suppression components.

Table 1-22. S800 Digital Modules

Module type	Description
DI810	Digital Input 24 V d.c., 2 x 8 channels. Current sink. Rated isolation voltage 50 V.
DI811	Digital Input 48 V d.c. 2 x 8 channels. Current sink. Rated isolation voltage 50 V.
DI814	Digital Input 24 V d.c. 2 x 8 channels, current source. Rated isolation voltage 50 V.
DI820	Digital Input 120 V a.c. 8 x 1 channels. Current sink. Rated isolation voltage 250 V.
DI821	Digital Input 230 V a.c. 8 x 1 channels. Current sink. Rated isolation voltage 250 V.
DI830	16 channels (2x8) 24V d.c., current sink, with sequence of event (SOE) handling.
DI831	16 channels (2x8) 48V d.c., current sink, with sequence of event (SOE) handling.
DI885	Digital Input 24/48 V d.c. 1 x 8 channels, Current sink with sequence of event (SOE) handling. Rated isolation voltage 50 V.
DI890	Digital Input, Intrinsically safe interface 8 x 1 channels Rated isolation voltage 50 V.
DO810	Digital Output 24 V d.c. 0.5 A Current source short circuit proof, 2 x 8 channels. Rated isolation voltage 50 V.

Table 1-22. S800 Digital Modules (Continued)

Module type	Description
DO814	Digital Output 24 V d.c. 0.5 A short circuit proof, 2 x 8 channels, Current sinking. Rated isolation voltage 50 V.
DO815	Digital Output 24 V d.c. 2 A current source short circuit proof, 2 x 4 channels. Rated isolation voltage 50 V.
DO820	Digital Output Relay 8 x 1 channels. 24-230 V a.c. 3 A cos φ > 0.4 Normal Open d.c. < 42 W. Varistor protected. Rated isolation voltage 250 V.
DO821	Digital Output Relay 8 x 1 channels. 24-230 V a.c. 3 A cos φ > 0.4 Normal Closed d.c. < 42 W. Varistor protected. Rated isolation voltage 250 V.
DO890	Digital Output, Intrinsically safe interface 4 x 1 channels Rated isolation voltage 50 V.

Analog Modules

The analog I/O modules all have galvanic isolation relative to chassis ground in a group of 4 or 8 channels. The modules have the standard set of module status indicators.

Open circuit detection is available for inputs and outputs configured for 4…20 mA and for the RTD and TC inputs.

Table 1-23. S800 Analog Modules

Module type	Description
AI810	Analog Input 1 x 8 channels. 0(4)…20 mA, 0(2)…10V, 12 bit., 0.1% Current shunt resistor is protected to 30 V. Rated isolation voltage 50 V.
AI820	Analog Input differential 1 x 4 channels. -20…20 mA, -5...5 V, -10…10 V, 12 bit + sign, 0.1 %, CMV 50 V. Current shunt resistor is protected to 30 V. Rated isolation voltage 50 V.
AI830	Analog Input 1 x 8 ch. Pt100 (-80... 80°C, -200... 250°C, -200 ... 850°C), Ni100 (-60 ... 180°C), Ni120 (-80 ... 260°C), Cu10 (-100 ... 260°C), Resistor (0 ... 400Ω), 14 bit. Rated isolation voltage 50 V.
AI835	Analog Input 1 x 8 ch. Termo Couples (TC), type B (0 ... 1820°C), type C (0 ... 2300°C), type E (-270 ... 1000°C), type J (-210 ... 1200°C), type K (-270 ... 1372°C), type N (-270 ... 1300°C), type R (-50 ... 1768°C), type S (-50 ... 1768°C), type T (-270 ... 400°C), linear -30 .... 75 mV, 14 bit. Rated isolation voltage 50 V.
AI890	Analog Input, with Intrinsically safe interface 1 x 8 ch. 0 (4)...20mA, 12 bit, 0.1% Rated isolation voltage 50 V.
AI895	Analog Input, with Intrinsically safe and HART interface, 0(4)...20mA, 12 bit, 0.1% Rated isolation voltage 50 V.
AO810	Analog Output 1 x 8 channels, 0(4)…20 mA, 14 bit 0.1% RL maximum 500/850 Ohms. Rated isolation voltage 50 V.
AO820	Analog Output 4 x 1 channels, -20…20 mA, -10...10 V, 12 bit + sign, 0.1%, individually galvanical isolated. Current output RL maximum 550 Ohms. Voltage output RL minimum 2 kohms. Rated isolation voltage 50 V.

Table 1-23. S800 Analog Modules (Continued)

Module type	Description
AO890	Analog Output, with Intrinsically safe interface 1 x 8 ch. 0(4)...20 mA, 12 bit, 0.1% Rated isolation voltage 50 V.
AO895	Analog Output, with Intrinsically safe and HART interface 0(4)...20mA, 12 bit, 0.1% Rated isolation voltage 50 V.

Pulse Counting / Frequency Measurement Modules

The Pulse Counting / Frequency Measurement modules DP820 is a two-channel pulse counter module in the S800 I/O series. Each channel can be used for independent pulse count/length measurement and frequency/speed measurement. The module is placed in a S800 I/O station connected to the Controller via Advant Fieldbus 100.

Configuration and signal handling of module DP820 is handled via the data base element DP820 and PC-element DP820-I and DP820-O.

Table 1-24. Pulse Counting / Frequency Measurement Modules

Module type	Description
DP820	Pulse counter measurement. A 29 bits bidirectional counter with: - Coincidence detection controlling one digital output signal. - Freezing of counter value depending on different conditions. - Synchronization of counter depending on different conditions. Frequency/Speed measurement up to 1.5 MHz with: - Freezing of value depending on different conditions. - Selectable measure time within 1 up to 2000 milliseconds. - Built-in scaling of frequency value to engineering units. Transducers with quadrature encoded signals or with up/down pulse signals can be connected to the module.

Module Termination Units (MTU)

Termination Units are available as Compact MTUs or Extended MTUs. A compact MTU normally offers termination of one wire per channel for a 16 channel module. With compact MTUs power distribution of field circuits must be made with external terminal blocks and current limiting components if required. Extended MTUs with group-wise isolated interfaces allows for two or three wire termination of field circuits and provides group-wise or individually fuses, maximum 6.3A glass tube type, for powering field objects. Extended MTUs which offer two or three wire terminations allows direct field object cable termination. The need for external marshalling is therefore drastically reduced or eliminated when extended MTUs are used.

Compact MTUs are 58 mm (2.3") wide and extended MTUs are 120 mm (4.72") wide. The two MTU types can be mixed and matched within an I/O-station to fit a user's needs. Choice of compact MTU or extended MTU can be made freely trading space versus termination needs.

Compact and extended MTUs are available with rated isolation voltages 50 V and 250 V. The 50 V types can be used with all 24 V or 48 V discrete I/O and analog I/O modules. The MTUs with 250 V rated isolation voltage are used with all 120 V and 250 V rated I/O modules. There is also one compact MTU for modules with Intrinsically safe interface.

Table 1-25. S800 Module Termination Units

Module type	Description
TU810	Compact MTU, 58 mm wide. Two isolated groups each with 2 rows of 4 uncommitted terminals, 2 pcs L+ terminals and one row of 5 pcs L-. Rated isolation voltage 50 V. Conductor area: 0.2-2.5 mm^2, AWG 24-12.
TU811	Compact MTU, 58 mm wide. 2 x 8 uncommitted terminals. Rated isolation voltage 250 V. Conductor area: 0.2-2.5 mm^2, AWG 24-12.
TU812	Compact MTU, 58 mm wide. 25 pin D-sub Connector for field connection Rated isolation voltage 50 V.
TU814	Compact MTU, 58 mm wide. Crimp Snap-in Connectors for field connection. Rated isolation voltage 50 V. Conductor area: 0.5 - 1.0 mm^2, AWG 16-22.
TU830	Extended MTU, 120 mm wide. Two isolated groups each with 2 rows of 8 uncommitted terminals, 2 pcs L+ terminals and one row of 10 pcs L-. Rated isolation voltage 50V. Conductor area: 0.2-2.5 mm^2, AWG 24-12.
TU831	Extended MTU, 120 mm wide. 2 x 8 uncommitted terminals. Rated isolation voltage 250 V. Conductor area 0,2-4 mm^2, AWG 24-10.
TU835	Extended MTU, 120 mm wide. Two isolated groups with 2 rows each one rows of 4 uncommitted terminals individually fused, one rows of 4 uncommitted terminals, 2 pcs L+ and 2 pcs L- terminals. Rated isolation voltage 50 V. Conductor area: 0.2-2.5 mm^2, AWG 24-12.

Table 1-25. S800 Module Termination Units

Module type	Description
TU836	Extended MTU, 120 mm wide. Two isolated groups with one row of 4 uncommitted terminals individually fused (3 A), one row of 4 uncommitted terminals, 2 pcs L and 2 pcs N- terminals. Rated isolation voltage 250 V. Conductor area: 0.2-2.5 mm^2, AWG 24-12.
TU837	Extended MTU, 120 mm wide. 16 individually isolated terminals (8 ch) each channel has one process voltage terminal and one fused (3 A) load outlet. Two groups of uncommitted return terminals. 2 + 3 interconnected terminals. Rated isolation voltage 250 V. Conductor area (ch): 0.2-4 mm^2, AWG 24-10. Conductor area (return): 0.2-2.5 mm^2, AWG 24-12.
TU838	Extended MTU, 120 mm wide. Two isolated groups. Each group 8 I/O channels, 4 fused transducer power outlets, 4 return connections and process power connection. Rated isolation voltage 50 V. Conductor area: 0.2-2.5 mm^2, (Stranded) AWG 24-12.
TU890	Compact MTU, 58 mm wide for modules with Intrinsically safe interface. 27 uncommitted terminals and 4 terminals for power supply. Rated isolation voltage 50 V. Conductor area: 0.2-2.5 mm^2, (Stranded) AWG 24-12.

Power Supplies

The power supplies SD811 and SD812 (24 V output) can be used to power processor modules and S800 I/O modules, through the processor unit and to power 24 V field circuits (optional).

The supplies have a wide input voltage range, nominally 110V-240 V without input voltage range selection. The primary side can connect to industrial mains installation class III (IEC664).

The outputs are short circuit proof and can operate with resistive, capacitive and constant power loads, for example, switched mode power converters.

The outputs of the supplies can be connected in parallel to increase power, 2 x SD811 or 2 x SD812, or be configured for redundant mains to increase availability, 2 x SD811 or 2 x SD812. Each supply has a power OK signal which can connect to the SA or SB inputs of the communication interface modules or Optical Modulebus modem to monitor power status in 1:1 redundant mains configurations.

Table 1-26. Power Supplies

Module Type	Description
SD811	SD811 Power Supply 100-240 V a.c./185-250 V d.c. 24 V d.c. 2.5 A. Rated isolation voltage 300 V.
SD812	SD812 Power Supply 100-240 V a.c./185-250 V d.c 24 V d.c. 5 A. Rated isolation voltage 300 V.

Optical Modulebus Expansion

The Modulebus can be expanded by using a Modulebus Optical port module on the Fieldbus Communication Interface module and communicates via an optical cable with the Optical Modulebus modem in the I/O cluster.

Optical Modulebus Modem

The Optical Modulebus modems have an input for one 24 V d.c. power. The FCI provides 24V d.c. (from the source) and an isolated 5V d.c. power to the base cluster's I/O modules (12 maximum) by way of the ModuleBus connections. The power source can be the SD811/812 power supplies, battery, or other IEC664 Installation Category II power sources. Power status inputs, 2 x 24 V, to monitor 1:1 redundant mains are also provided

The front plate of the Optical Modulebus modem provides LEDs for diagnostic and status indications. One rotary switches is used for setting of the cluster address. Labels for optional user text and item number are also provided.

Modulebus Optical Port

The Modulebus Optical port have connectors for optical cables and connector for connection to the communication interface module.

Table 1-27. Modulebus Items

Module type	Description
TB810	Modulebus Optical port 10 Mbit/s for Modulebus optical expansion used together with S800 I/O and Drive equipment Option to the Fieldbus Communication Interface.
TB811	Modulebus Optical port 5 Mbit/s for Modulebus optical expansion used together with Drive equipments. Option to the Fieldbus Communication Interface.
TB815	Module Bus Interconnection Unit to redundant FCIs (CI820)
TB820	Optical Modulebus modem. Optical and electrical Modulebus interface. Power supply 24 V Rated isolation voltage 50 V.

1.7.7 Communication

System communication resources are primarily treated in Section 1.7.7.1, Provided Link Types. You will find an enumeration of the main applications of these communication links in Advant Controller 450 in this section.

1.7.7.1 Provided Link Types

Information in this section is divided according to the different link types. An outline description follows. All link types, besides the widely spread standard V.24/RS-232-C, are described in separate users' guides. For referrals to specific documents, see Section 1.4, Related Documentation.

Provided link types in Advant Controller 450 are:
MasterBus 300/MasterBus 300E, GCOM, Bus Extension to S100 I/O, MasterFieldbus, Advant Fieldbus 100, PROFIBUS-DP, LONWORKS Network, RCOM, EXCOM, MultiVendor Interface and **V.24/RS-232-C**

MasterBus 300/MasterBus 300E, Outline Description

Use MasterBus 300 to interconnect Advant Controller 400 Series, Advant Station 500 Series, MasterPiece 200/1, MasterView 800/1 Series and MasterBatch 200/1 stations in a control network (network communication). It provides high-speed, high-performance communication over medium distances.

MasterBus 300 is based on the IEEE 802.2 class 1 connection-less unconfirmed data link service protocol and IEEE 802.3 CSMA/CD (Carrier Sense Multiple Access/Collision Detection) medium access control. In short, this means that there is no specific master station, but all stations/controllers have equal access to the bus. A connection-oriented transport protocol according to ISO class 4 ensures flow control and reliability.

Use MasterBus 300E (Extended) when communicating via bridges (and radio links, satellites, and so on) to interconnect MasterBus 300 networks. The communication bridges must conform to the IEEE 802,3 standard. The characteristics of MasterBus 300E are the same as for MasterBus 300 except that the communication parameters can be tuned to allow communication over links, which introduces delays and limits the bandwidth.

The MasterBus 300/MasterBus 300E separates the communication function within a station/controller. You can expand or reconfigure the control network without any changes to the application in the controllers or operator's stations. The network is self-configured, that is no configuration of the data base is required. The configurator sets network and node identity on hardware.

There is a low-load version of MasterBus 300/MasterBus 300E for the Advant Controller 450 which uses special hardware. The low-load version has dedicated CPU support, so it causes a lower load in the main CPU of the controller.

The transmission rate is 10 Mbits/s.

To also ensure availability of data communication when a cable or a communication unit fails, you can duplicate MasterBus 300/MasterBus 300E.

GCOM, Outline Description

GCOM is a data link protocol used for data exchange with the help of message passing between external computers and Advant OCS stations/controllers. The protocol is available for VAX computers. The following data link protocol alternatives are supported:

- IEEE 802.2 class 1 logical link control and IEEE 802.3 CSMA/CD medium access control
- CCITT recommendation X.25.2 LAPB with transmission rate 19.2 or 50 kbits/sec
- ADLP-10 (ABB Data Link Protocol), an asynchronous protocol based on ECMA 16 and ECMA 24, with transmission rate of 9.6 kbits/sec.

You can duplicate GCOM to achieve full redundancy.

Bus Extension to S100 I/O

The processor module and optional communication boards are located in a controller subrack. This cannot accommodate any process I/O. One way you can connect such I/O is to use I/O subracks. With an electrical bus extension the I/O subracks can be located close to the controller subrack.

For increased availability, you can duplicate CPUs, bus extension and cables.

Figure 1-31 illustrates a bus extension comprising two I/O subracks.

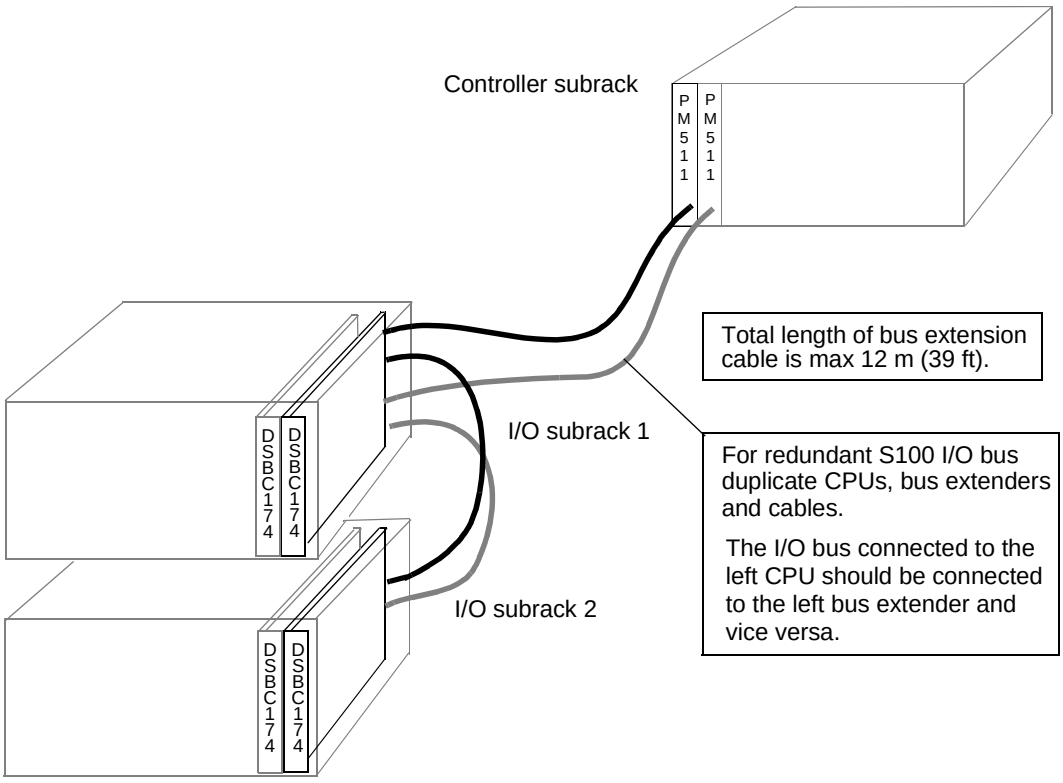

Figure 1-31. Example of Electrical Redundant Bus Extension

An optical bus extension is available which makes I/O subrack distributable. Figure 1-32 illustrates a configuration combining a central I/O subrack and two distributed I/O clusters.

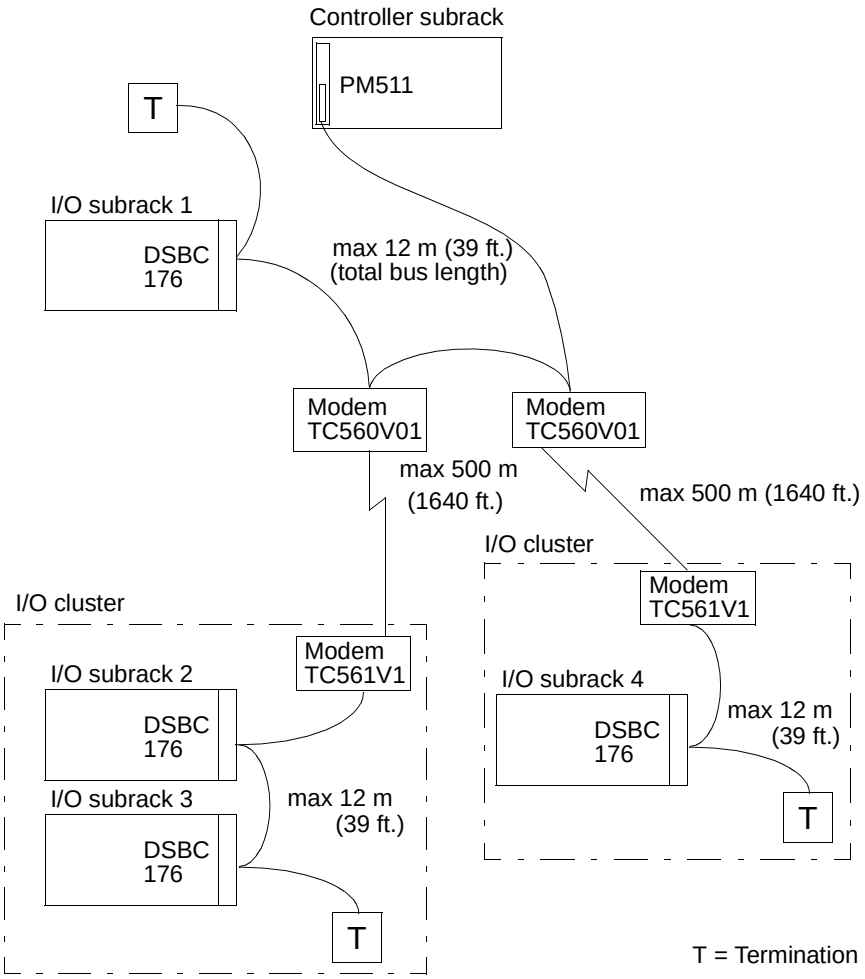

Figure 1-32. Example including Non-redundant Optical Bus Extension

The bus extension is part of the I/O system described in a separate manual, *S100 I/O Hardware*.

MasterFieldbus, Outline Description

MasterFieldbus is a high-speed communication link that connects S100 I/O. In addition, it also connects local processing units such as MasterPiece 90, MasterPiece 51 and converters for motor drives (TYRAK L or SAMI) to Advant Controller 450.

You can connect several buses to one Advant Controller 450, and each bus can take up to 16 remote units.

You can disconnect remote units from the bus and replace them without disturbing other units or their communication with Advant Controller 450. Communication with a reconnected unit is resumed automatically.

MasterFieldbus operates at 2 Mbits/s.

For distances up to 25 m (82 ft.), use MasterFieldbus with twisted pair cable and without modems. For longer distances, use modems. Both coaxial and optical types of cable are available.

MasterFieldbus can also operate at 375 kbits/s. This speed is used, for example, when communicating with MasterPiece 90.

For increased availability, you can duplicate the cables and modems (physical redundancy).

Figure 1-33 gives an example of a physical configuration.

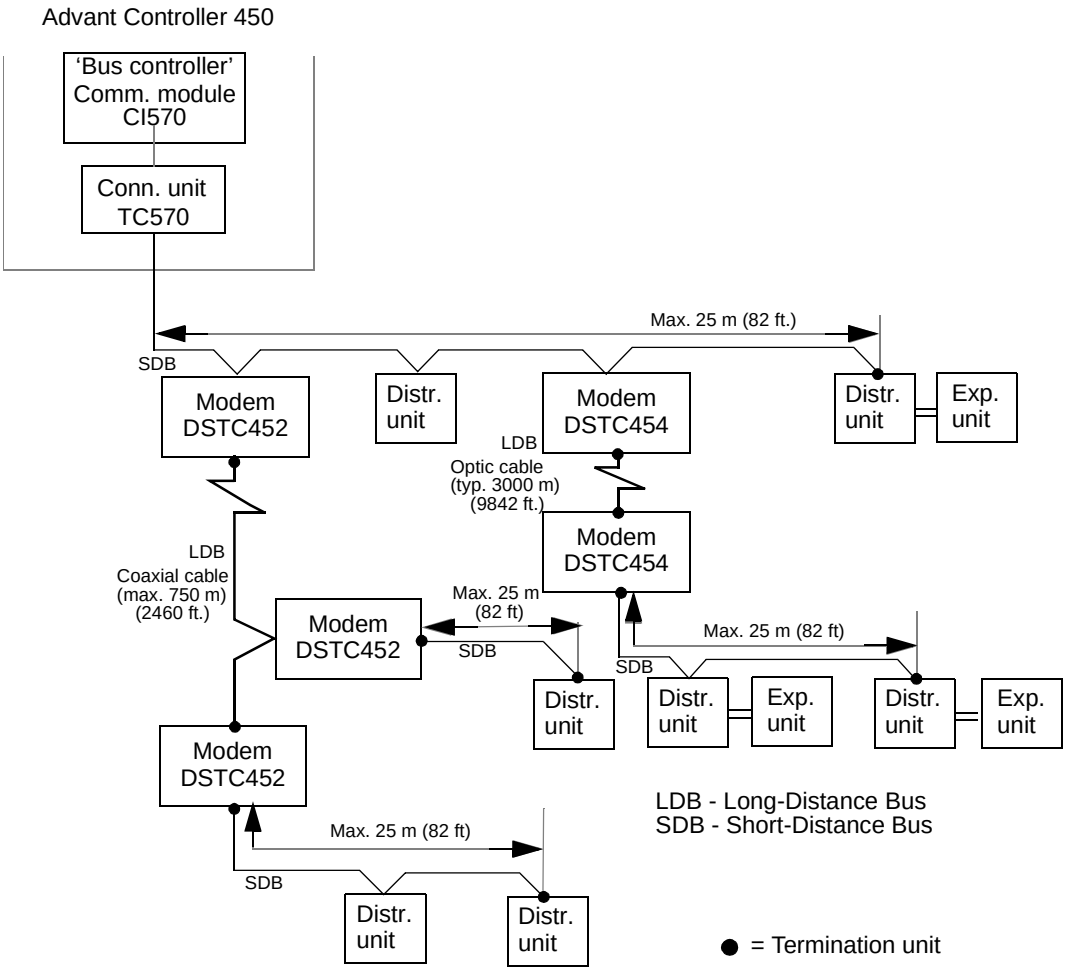

Figure 1-33. Example of Physical Configuration of Non-redundant MasterFieldbus and S400 I/O Units

Advant Fieldbus 100, Outline Description

Advant Fieldbus 100 is a high-performance bus specially designed for real-time applications. A number of different products are connectable to Advant Fieldbus 100, that is Advant Controller 410/450, Advant Controller 110, distributed S800 I/O stations, ACV 700 Converter, and so on. It features reliable, cyclic data transfer as well as event-driven background transfer of service data.
Advant Fieldbus 100 also features a distributed master scheme. If one or several controllers are lost, the bus is not affected and operations continue.

Three types of transmission media, coaxial cable, twisted pair cable and optical fibre are supported. The maximal bus length is depending on which transmission media is used.

For increased availability, you can duplicate the cables and modems (physical redundancy) or for full redundancy also duplicate the bus interface modules.

An S800 I/O station has a built in modem and communication interface for the twisted pair media.

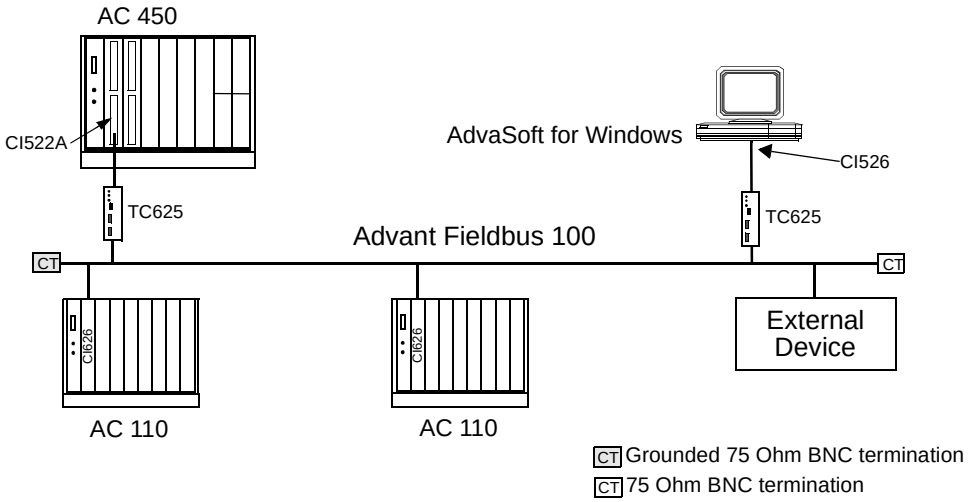

Figure 1-34. A non-redundant Advant Fieldbus 100 Configuration using Coaxial Media

With modem TC515V2 you can extend the bus length up to 1400 m.

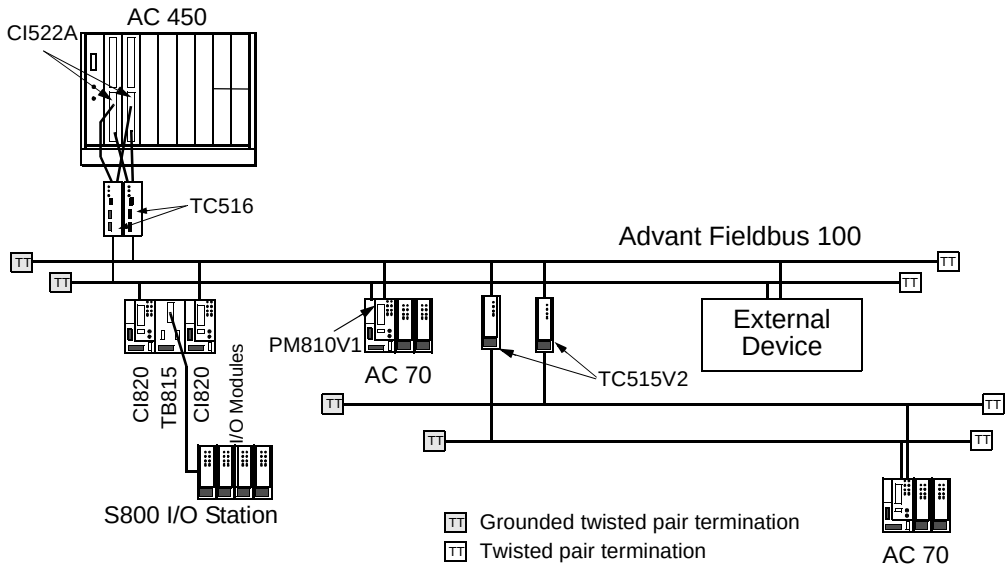

Figure 1-35. A redundant Advant Fieldbus 100 Configuration using Twisted pair Media

Together with the opto-modem TC630 or TC514V2 and opto-fibre cable, you can extend the bus length up to 1700 m.

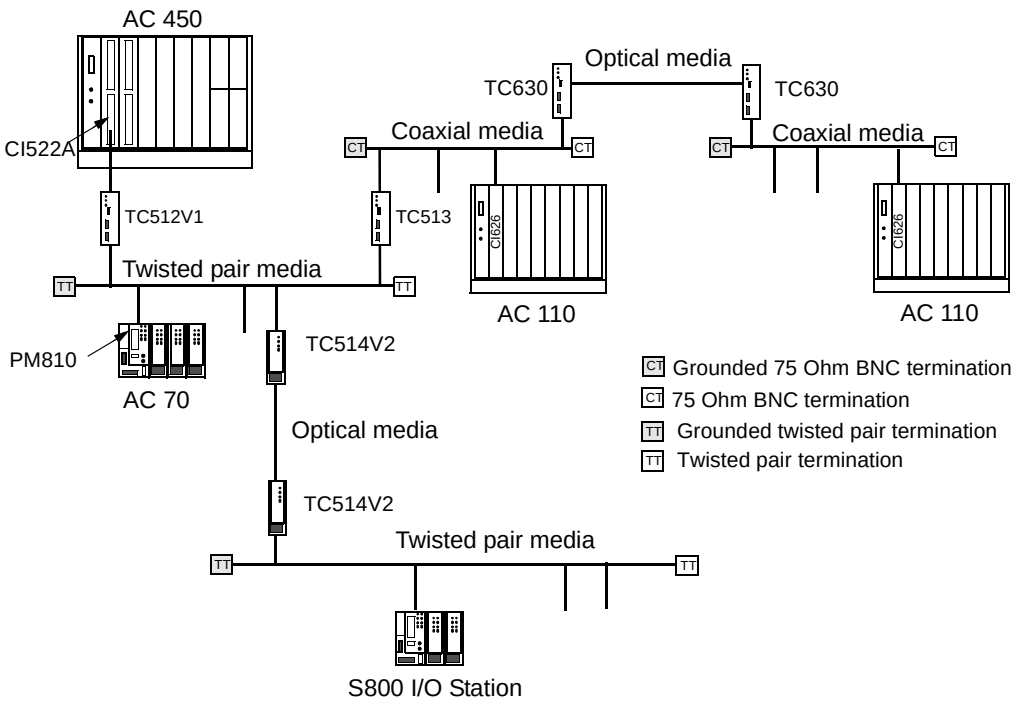

Figure 1-36. Media Conversion in Advant Fieldbus 100

PROFIBUS-DP Outline Description

PROFIBUS is a set of international fieldbus standards included in the European standard EN 50 170. Within the PROFIBUS family of protocols, PROFIBUS-DP is optimized for high speed and inexpensive hookup. It features reliable, cyclic data transfer.

PROFIBUS-DP is designed especially for communication between automation control systems and distributed I/O at the device level.

Network Configurations

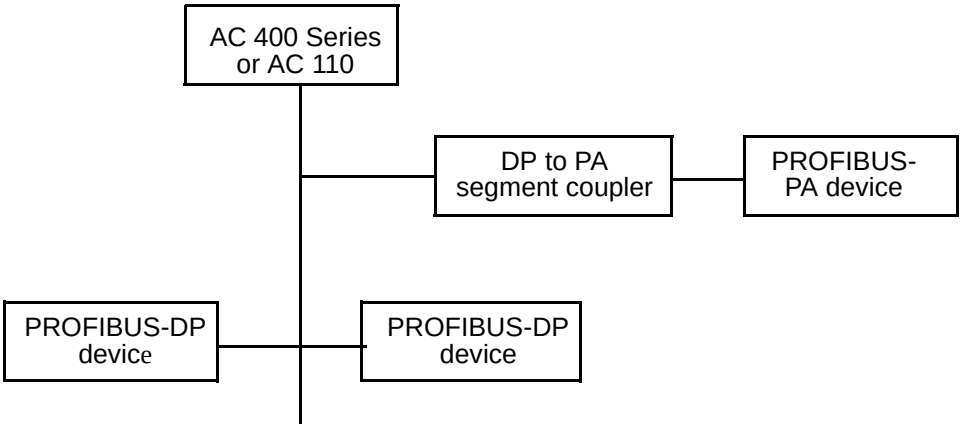

Figure 1-37. PROFIBUS-DP configuration example

Up to 125 slave nodes can be connected to one bus. Up to eight buses can be configured in an Advant Controller 450.

LONWORKS Outline Description

LONWORKS is an open fieldbus which has been designed to be used as a control network. Is is characterized by multiple communications media, multi vendor equipment, low maintenance cost, and very low per node cost. It features event handling and reliable, cyclic data transfer.

Network Configurations

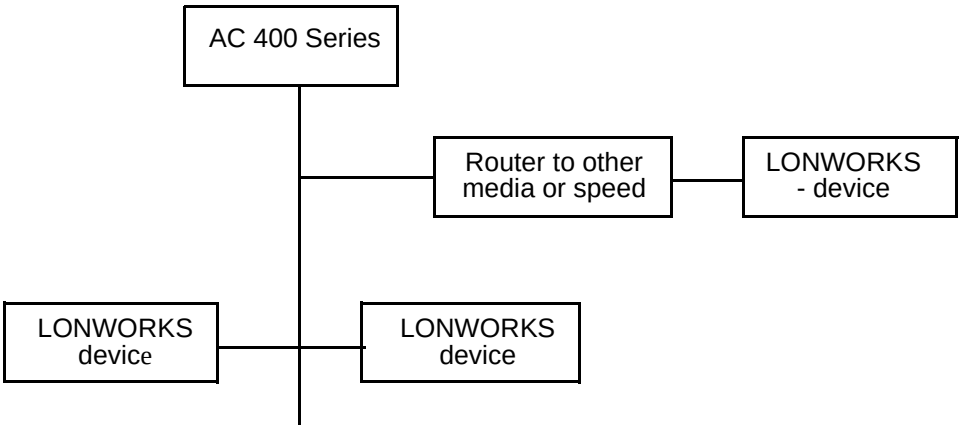

Figure 1-38. LONWORKS network configuration example

Up to 128 supervised devices can be connected to one bus. Meaning that more devices can be connected to the bus, but can not be supervised by the Advant Controller 450. Up to eight buses can be configured in an Advant Controller 450.

EXCOM, Outline Description

EXCOM (EXternal computer COMmunication) permits the external computer to read or write in the Advant Controller 450 data base with the help of simple commands and an asynchronous serial communication link V.24/RS-232-C. The communication is controlled by the external computer. Figure 1-39 shows the possible alternative means of connection with an external computer. This figure shows how you can connect an external computer directly to one or more Advant Controller systems. The external computer can reach other nodes in the configuration through communication via a MasterBus.

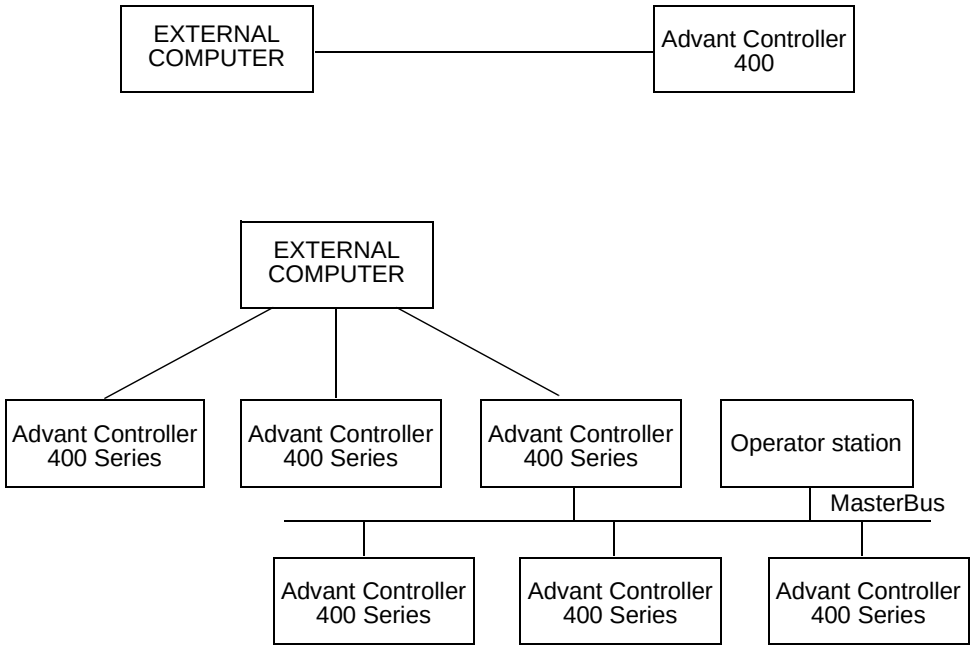

Figure 1-39. Alternative Connections of an External Computer to Advant Controllers

RCOM, Outline Description

RCOM (Remote COMmunication) enables Advant Controller 450 to communicate/transmit data to other units over long distances via a serial V.24/RS-232-C asynchronous communication bus.

You can connect the following Advant OCS product lines and alien equipment to the Advant Controller 450:

- Advant Controller 50 series
- Advant Controller 100 series
- Advant Controller 400 series
- MasterPiece 200/1
- Older types of ABB Master process stations or alien computers
- Various equipment, for example, Essentor PC manager.

RCOM functions in accordance with the master-slave principle. The communication is performed via point-to-point or multi-drop connection. You can also connect a dialing modem on telecommunication authority lines. The modem must have command-initialized dialing and an automatic reply function.

Redundancy is possible at different levels by optional duplication of communication boards, modems and cables. Use redundant RCOM only for point-to-point connections.

MultiVendor Interface, Outline Description

MultiVendor Interface (MVI) is communication with other manufacturers' control systems. The following MVI protocols are available as standard:

- MODBUS
- Siemens 3964 (R)
- Allen-Bradley DF1.

In addition, there is an MVI free-programmable communication interface which you can use to support user-defined protocols. This function enables you to connect "intelligent" transducers of different types to an Advant Controller. The module used has two serial asynchronous channels and is programmed in C language. The programming is done in a MVI Development Environment based on a personal computer.

The module CI535 requires an older Development Environment based on a work station.

MVI uses a V24/RS-232-C asynchronous serial communication link. This link allows communication at long distances.

1.7.7.2 Applied Communication

Advant Controller 450 communicates with a wide range of products, as indicated in Table 1-28. The links used are shown. RCOM is, in some cases, an alternative for long-distance or low-cost/less-performance applications. The main functionality obtained is given. Additionally, there are diagnostics generally included as a basic link function.
Diagnostics information on the communicating units is also commonly accessible via status messages.

Table 1-28. Communication Survey

Equipment	**Used link(s)**	**Functionality** (explanations below)
Advant Controller 410/450	MasterBus 300/300E, RCOM	R I B EA
Advant Station 500 Series OS	MasterBus 300/300E	E S C
Advant Station 500 Series IMS	MasterBus 300/300E	E S C
Advant Station 500 Series ES	MasterBus 300/300E	**2)**
MasterPiece 200/1	MasterBus 300/300E, RCOM	R I B EA
MasterView 800/1	MasterBus 300/300E	E S C
MasterBatch 200/1	MasterBus 300/300E	**1)**
MasterGate 230/1	MasterBus 300/300E	E S C
Advant Station 100 Series IMS	GCOM	E S C
SuperView 900	GCOM	E S C
AdvaSoft for Windows	GCOM	R I B
S100 I/O	Bus Extension to S100 I/O	E **6)**
S400 I/O	MasterFieldbus	EA **6)**
S800 I/O	Advant Fieldbus 100	R I B EA **6)**
MasterPiece 51	MasterFieldbus	B
TYRAK L, SAMI, and so on	MasterFieldbus	R I B **3)**
Advant Controller 110	Advant Fieldbus 100, RCOM	R I B E
MasterPiece 90	MasterFieldbus	R I B
ACV 700, DCV 700 Converter	Advant Fieldbus 100	R I B
Advant Station 100 Series ES	Internal bus	**2)**
ABB Prologger, DCS Tuner	EXCOM	R I B **4)**
Printer	V.24 / RS-232-C	**5)**
MasterView 320	V.24 / RS-232-C	R I B E
Advant Controller 55	RCOM	R I B EA

Table 1-28. Communication Survey (Continued)

Equipment	Used link(s)	**Functionality** (explanations below)
Advant Controller 70	Advant Fieldbus 100	R I B E
ABB Active Mimic Controller	RCOM	B
Other manufacturers' equipment	MVI	R I B
	PROFIBUS-DP	R I B
	LONWORKS Network	R I B E

Explanations

1) Mainly recipe data and report data are sent.

2) Configuration data transfer.

3) The control of d.c. motors in a drive system is integrated in the converter, which involves a considerable exchange of signals with Advant Controller 450. A special communication package implemented in the converter makes this adaptation possible.

4) EXCOM also provides reading of object data of the type AI, AO, DI, DO (Analog Input/Output, Digital Input/Output). This is utilized by the given product.

5) The main use of a printer for generating reports is described in Section 1.7.8.3, Control Functions, under the heading Reports.

6) Read/write process I/O data.

R, I, B indicates Real, Integer and Boolean data, respectively. Bi-directional information flow is possible.

E indicates handling of time-stamped events. Events are defined and time-stamped in the central I/O of Advant Controller 450 or in distributed units of the type Advant Controller 110 and Advant Controller 70. Advant Controller 450 sends the information to operator stations for presentation in lists. High accuracy in time.

EA also indicates handling of time-stamped events. Events originated in certain distributed units are time-stamped in the Advant Controller 450. Time delay due to communication must be reflected. When Data Set is used a supporting application program is needed in the Advant Controller 450. Advant Controller sends the information to operator station for presentation in lists. Less accuracy in time.

S indicates subscription of data from the Advant Controller 450 data base. It is requested by an operator station or a similar station. A subscription is normally an object-oriented, complex package of mixed data used for presentation purposes.

C indicates command signals, for example complex commands including several parameters or increase/decrease, start/stop, and so on from an operator station or similar device.

Data Set

Information is exchanged between separate controllers (and between a controller and other equipment indicated in Table 1-28) by means of "Data Sets," that is messages containing aggregates of data base information. Data Sets are explicitly specified in the communicating controllers, as part of the application programming.
With a Data Set, the communication normally transmits cyclically between the nodes.
The cyclic time is configurable.
In addition to Data Set, other variants exist, for example MVI Set, Data Set Peripheral.

A Text Set is a type of Data Set. With a Text Set, you can send text between controllers/process stations of the type Advant Controller 410/450 and MasterPiece 200/1 using MasterBus 300. Transmission of a Text Set is commanded from a PC program.

For a detailed description of Data Set and Text Set, see the reference manual *AMPL Configuration Advant Controller 400 Series*.

1.7.8 Process Control

Advant Controller 450 offers powerful features covering all aspects of process control in most application areas. For information on the application language used, the principles of configuration/application building and the functional resources, see the following sections.

1.7.8.1 Application Language

General

Process control applications are programmed in the ABB Master Programming Language (AMPL), a function-block language with graphic representation which has been developed especially for process control applications. The language is characterized in this way: each function is seen as a building block with inputs and outputs. The function of such a block can be simple, such as a logic AND function, or complex, such as a complete PID regulator. A program written in AMPL is referred to as a PC (process control) program, and the building blocks are called PC elements. The range of ready-to-use function blocks is wide and powerful.

You can program a controller in AMPL fully on-line with the programs running and controlling the process. If required, you can block part of a PC program, a complete PC program or the whole controller during programming. You can also develop programs off-line in an engineering station and load them into the controller at a later stage.

In addition to functional PC elements, AMPL contains a number of structural elements for division of a PC program into suitable modules which can be managed and executed individually. You can give the modules different cycle times and priorities so that both fast and slow control operations can be managed by the same PC program.

The inputs and outputs of an element are connected to the inputs and outputs of other elements or to process I/O points. Picking these elements and making these connections constitutes the programming work. The resulting PC program can then be documented graphically, which Figure 1-40 illustrates.

When a dedicated station is used for programming, it can be connected, either directly to the controller to be programmed, or indirectly via another controller in the communications network. For remote access, the public telephone network can be used.

Signals are represented in engineering units throughout the whole application program. This facilitates the configuration work, especially in connection to arithmetic operations. It also simplifies reading and understanding of the graphical documentation of the application program.
Scaling of an I/O signal from an electrical variable, for example, 4 - 20 mA, to a variable expressed in engineering units is made in the data base for the point.

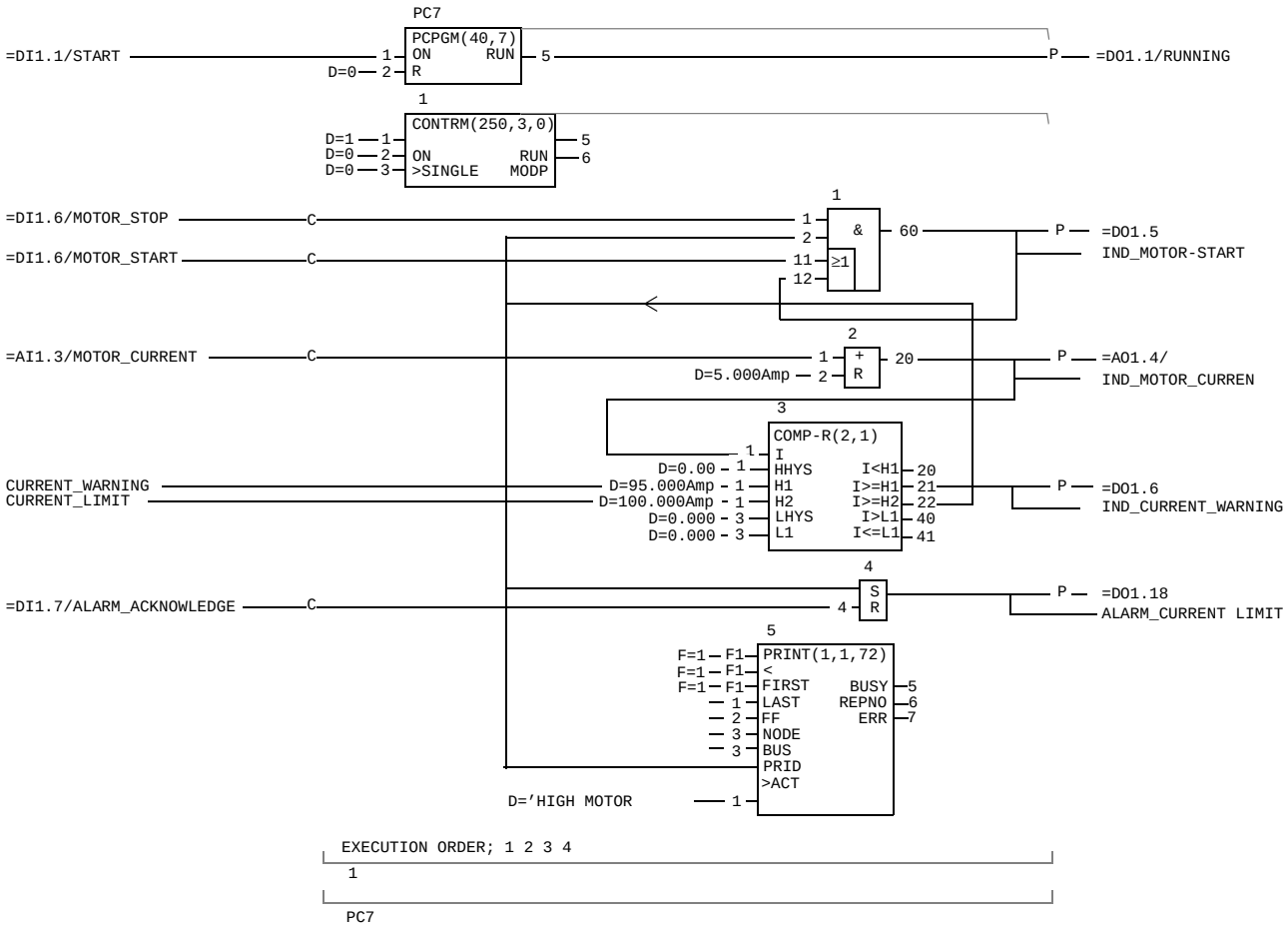

Figure 1-40. Example of Automatic AMPL Document Printout

Type Circuits

To boost application programming productivity even further, the engineering stations support the use of type circuits, that is, control solutions that are repeated frequently in an application area or in a specific application project. For instance, a type circuit may comprise all the functions required to control motors of a certain type, or pumps, valves, temperature loops, and so on, including all the necessary controller data base definitions for I/O and operator communication.

User Defined PC Elements

Another way to implement your frequently used control solution and ensure a fully integrated engineering environment is to make use of the option User Defined PC Elements.

A user defined PC element appears in every sense as a standard PC element. Actually the control solution of a user defined PC element is defined by other PC elements. See illustration in Figure 1-41.

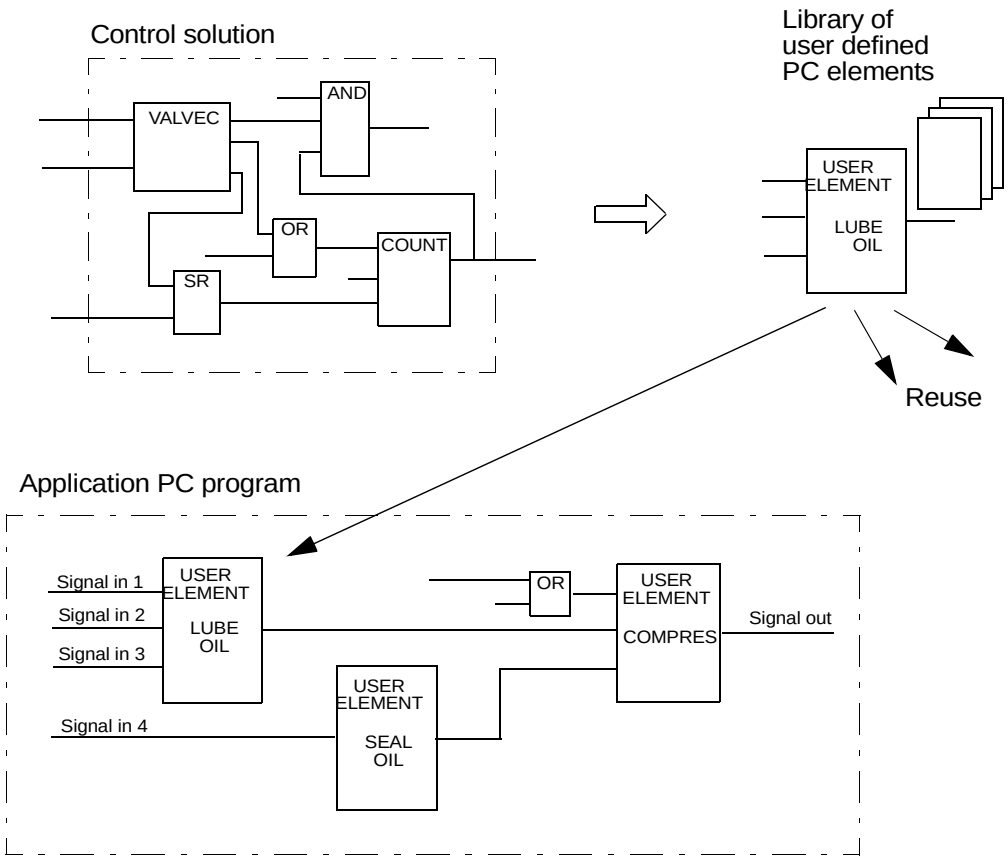

Figure 1-41. Process Objects Implemented as User Defined PC Elements

By designing your application with user defined PC elements you are gaining:

- Significant reduction in translation time
- Memory saving with reuse
- Similar documentation in Function Chart Builder and On-line Builder
- User defined PC element hierarchy
- Reduced man-hours in commissioning and maintenance.

1.7.8.2 Principles of Application Building

Figure 1-42 illustrates how process signals available in the data base are linked to the AMPL application program.

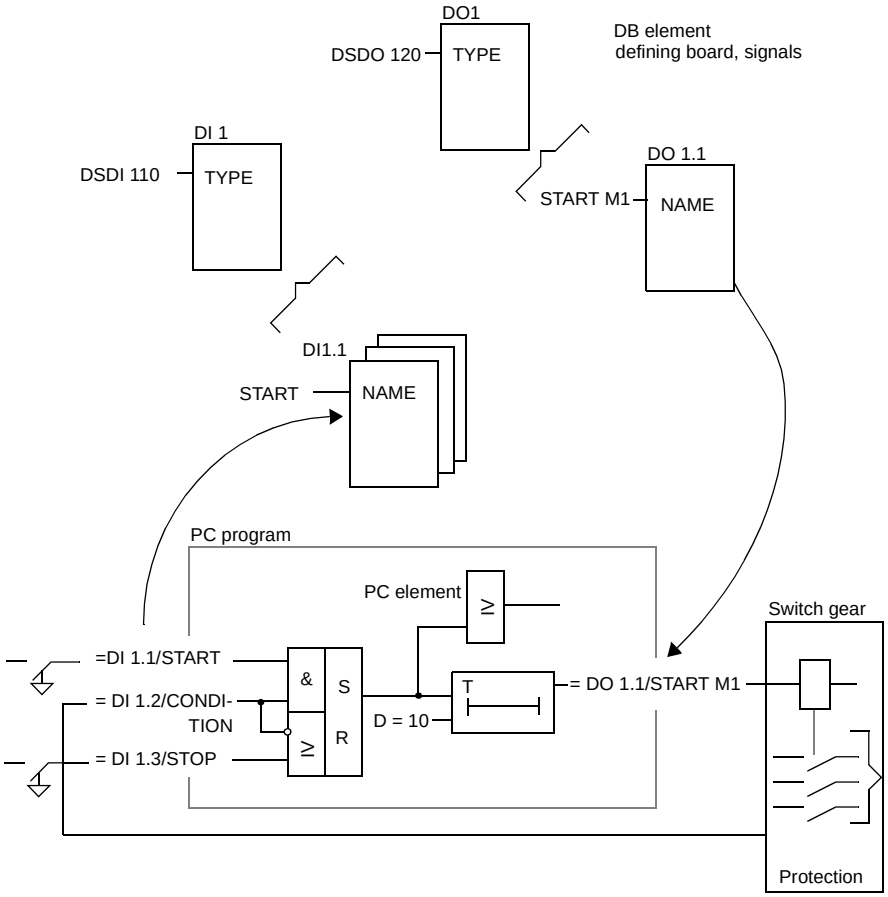

Figure 1-42. Simple Control Function Realized in AMPL

PC Elements and Functional Units

Besides the PC elements, the function library consists of functional units. Functional units are available to supplement the library for more complex functions. A functional unit is a package of different program functions such as PC element, data base element and operator's functions. This simplifies the realization of combined functions with both the control function and associated operator's handling via a display screen and keyboard.

The application can be a closed loop control function or a motor or valve control function requiring an advanced "face-plate" for the operator.

You can use several functional units in combination.

The functional units are also used individually. Examples of this can include a measuring circuit with alarm activation/deactivation and display screen presentation or a simple command function from the operator to the process.

You can freely combine the functional units with other PC elements.

Figure 1-43 illustrates the application of functional units in a complex burner control.

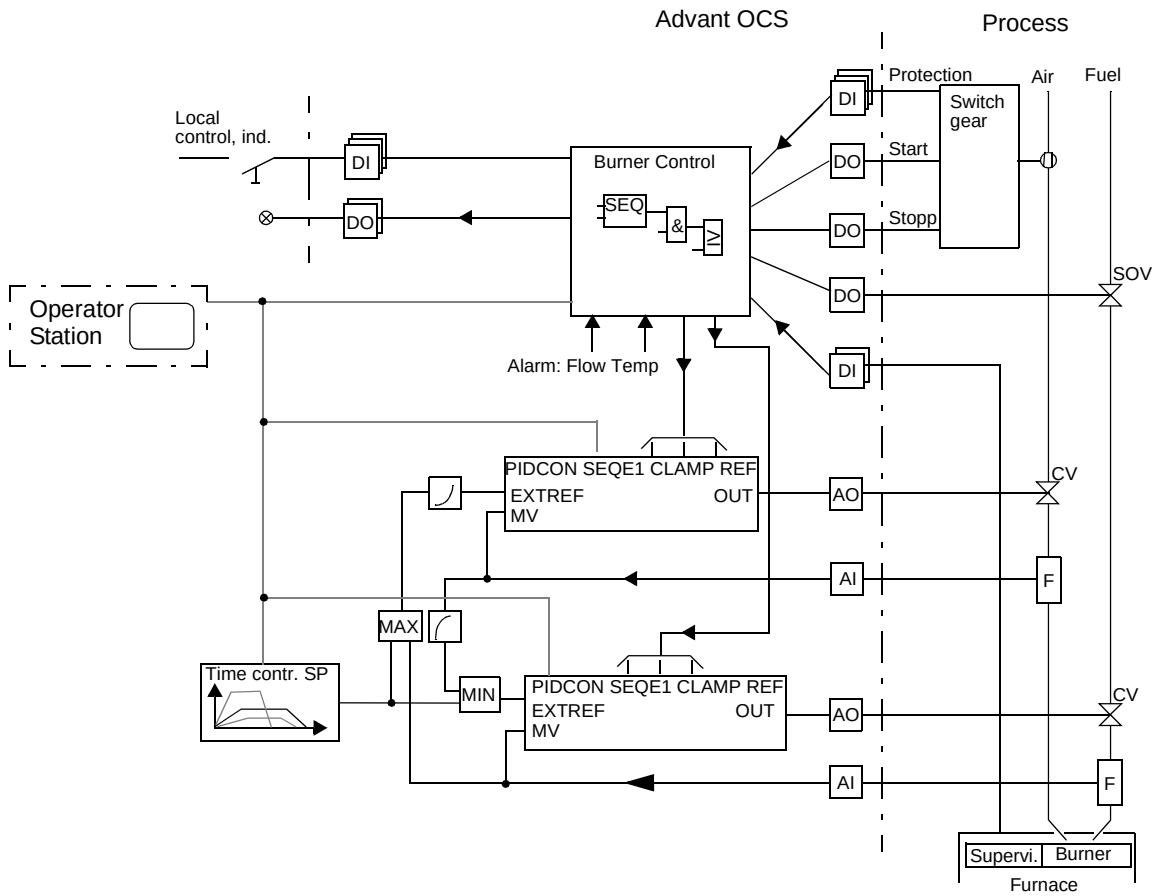

Figure 1-43. Principle of a Functional Unit Application

1.7.8.3 Control Functions

The main built-in control functions available for application building are grouped and presented briefly below. Most of the functions are supported by PC elements, that is the PC elements are the base of the functionality of the Advant Controller 450.
For a listing of those PC elements included in the basic system program module and the different optional program modules, see Section 1.7.3.3, Program Module Contents.
For detailed function descriptions of the different PC elements, see the separate reference manual, *PC Elements Advant Controller 400 Series*.

Logic and Time Delays

- Basic Boolean functions
- Composite Boolean functions
- On/off delay, pulse generation.

Sequence Control

- General structuring functions
- Sequence control influenced by standard IEC 848.

Data and Text Handling

You can arrange text strings to be presented on the operator station display screen or used in event printouts.

Calendar Time Functions

Date and time can be used when an automatic function shall be started or when a report is printed out.

Arithmetic

Standard arithmetic expressions as well as special functions are available.

Positioning

Positioning is a general term for position measurement and position control of d.c. and a.c. motors and hydraulically and pneumatically servo-controlled mechanisms in industry.
A special circuit board, DSDP 140A, is used together with a suitable pulse transmitter such as QGFA 110, QGFA 110 V or the equivalent. (It is also possible to connect other transducers.)

The circuit board communicates directly with PC elements for rapid positioning in which the pulse generator is used for feedback of actual values. A processor is provided on the circuit board for the fast calculation in the inner loop of the positioning system. The positioning board has a flexible design and is intended to perform several functions, together with different PC elements:

- POS-A(0) Length measurement
- POS-A(1) Positioning with analog output signal
- POS-O(0) Positioning with digital output signal for three speeds
- POS-O(1) Positioning with digital output signal which can be pulsed
- POS-L Length measurement with digital output signal with coincidence.

The following functions and properties are available:

  – Position measurement via an incremental pulse transmitter and a direction discriminator and a hardware counter which updates a software counter at regular intervals.

  – Three pulse inputs adapted for the ABB pulse generator QGFA 110: A channel, B channel and STROBE. Maximum frequency 80 kHz.

  – Analog output for speed reference, 11 bits + sign. 0 to ±10 V or 0 to ±20 mA.

  – Position control ON-OFF with fast, medium-speed or slow retardation to the interval "correct position." Position control ON-OFF with pulsed control. At low speed, the output signal is not constant but is pulsed forward to the "correct position" with pulse lengths varying with the deviation from the "correct position."

  – Functions on the board are supervised by means of self-testing. Faults are indicated by the illumination of LEDs on the board.

For a detailed explanation of the positioning system, see the manual *Positioning System*.

Pulse Counting and Frequency Measurement

These functions are used for different applications in the industry, such as position measurement, flow measurement, speed measurement, synchronization of machine movements, and so on. The pulse-counting function requires special hardware.

- The cycle time for the reading-in program is determined individually with the parameters in a DB element. After the reading-in, the values are converted to process-related units and checked against limits. The limits which are exceeded are stored in the data base.
- The pulse-counting/frequency measurement function requires hardware module DSDP 150. This circuit board is used for both pulse counting and frequency measurement and has inputs which can be connected to pulse generators with a frequency of up to 10 kHz.
- DSDP 170 is a circuit board which is primarily intended for positioning/length and speed/frequency measuring. Maximum pulse frequency is 2.5 MHz.
- DP820 is a module which is primarily intended for positioning/length and speed/frequency measuring. Maximum pulse frequency is 1.5 MHz.

Reports

The report function permits you to connect a printer to the Advant Controller 450 system to print out simple reports.

Figure 1-44 shows an example of a simple report which is "edited" with the help of data base and PC elements. Values, date and time are transformed into text strings.

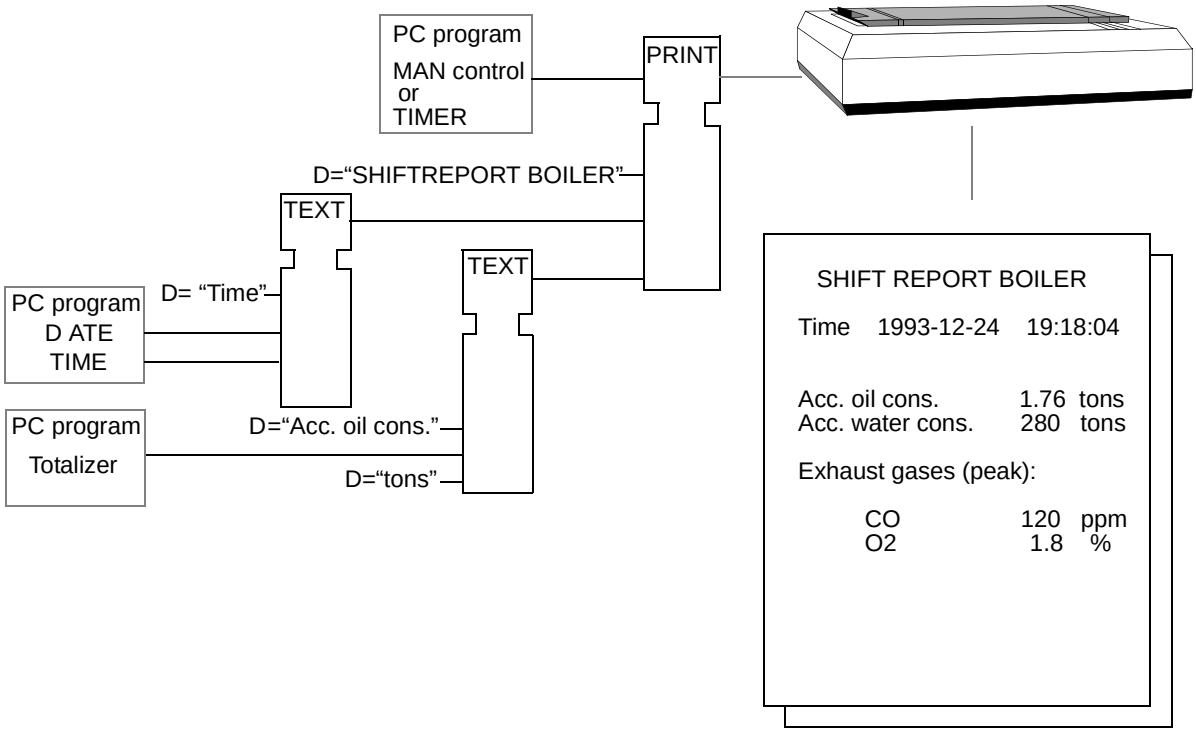

Figure 1-44. Example of Simple Report

Some notes regarding the printer and report application follow:

- You can direct the printout of a report to a printer connected to another Advant Controller on the control network.
- Advant Controller 450 has a REPORT PC element, which makes it possible to initiate a hard copy printout of a display in an operator station.
- The printouts can be made, upon operator demand, event-driven and cyclic.
- The print out of application information, that is data base lists and PC program diagrams, is done on a printer connected to the configuration tool.

As an alternative to a controller-connected printer, you can use the facilities from a large operator station (Advant Station 500 Series, MasterView 800/1). Actually, this is the most common way of printing information from any station in a control network. Advanced reports can be arranged from the contents and layout viewpoint. Also, you can use a local operator station for reports. In the latter case, the display information from a MasterView 320 is printed out. Once the report/display is configured, it is possible to remove the MasterView 320. In other words, MasterView 320 in such an application can be used as a configuration tool only.

For further information regarding report generation in operator stations, see the appropriate separate documentation.

Supervision

Process supervision has an important role in a control system like Advant Controller 450. Any logic state transition in the process or application program, or any limit transition of a process variable or complex calculated variable, can be defined as a point of event.

Events can be time-stamped with a resolution down to 1 ms, which enables you to perform excellent analyses of cause and effects in complex situations.

Events can be defined further as alarm points. The operator's attention can be drawn by audible signal or a flashing light requiring acknowledgment. Such handling can be built up in an application program with the support of the powerful FAULT element. An operator station which is part of the MasterView 800/1 or Advant Station 500 Series provides powerful ready-to-use event and alarm handling.

Measuring

You can connect process variables with different electrical representations as follows:

- Standard signal types, 4 - 20 mA, 0 - 10 V.
- Pt 100, Thermocouple
- Pulse, Frequency.

Pre-filtering is important in digital systems to obtain interference-free control and logging. The irrelevant frequency content in the process signals must be limited.
Standard signals for current and voltage are pre-filtered in steep active hardware filters whereas temperature measurement signals are filtered by integrating A/D conversion. In addition to hardware filtration, the software can select digital filtration with single pole filters and with the required break frequency.

In the case of temperature measurement, linearization is performed in accordance with the type of Pt 100 transducer or thermocouple selected. Linearization through root extraction, for example with pressure difference measurement, can be selected if required.

Feedback Control

Powerful functions for feedback control are provided with a great number of PC elements and functional units. Examples of applications are:

- Basic PID control
- Cascade-coupled controllers
- Ratio control
- Manual control from central/local operator's workplace
- Controlling final elements with two- or three-position action
- Override control
- Batch control
- Split range
- Gain scheduling or other adaptation strategies
- User-defined control strategies combining the range of available algorithms P, PI, PDP, PIP, DER, INT, FILT-1P/2P, P-DEADB and RAMP.

The built-in features in one of the complex loop controllers, the functional unit PIDCONA, are:

  – Several control modes with built-in priority scheduling
  – Automatic tracking for bumpless control mode changeover
  – Cascade inputs
  – Differentiation, either of the measured value or the control deviation
  – Parameter scheduling
  – Forcing control of the output signal
  – Limitation of set-point and output with respect to amplitude and rate of change
  – Limit supervision with event and alarm handling
  – Powerful operator interface.
  – Self-tuning and adaptive PID algorithm.

It is easy to combine such a loop controller with supplementary functions, for example interlocking, start-up and shut-down sequences, calculations, process optimization and so on.

Fuzzy Control

The function FUZZYCON allows the user to specify the control algorithm using fuzzy control, which is an applied science of fuzzy theory. Moreover, the function supports multi variable input and multi variable output, that is several controlled variables and manipulated variables can be handled simultaneously. To the operators, FUZZYCON exposes the same "look and feel" as other functions, that is PIDCON, with respect to object displays and dialogs. This is also true for other run time features and most of the engineering tasks.

Motor and Valve Control, Group Start

High-level functional units are available for applications such as valve control or group control of motors. The built-in features in one of the complex motor controllers, the functional unit MOTCON, are:

- Supervision of control circuits
- Evaluation of interlocking
- Control of on/off
- Supervision of motor current
- Running of tests from the motor site
- Control from central/local operator's station
- Manual/Auto running
- Forward/Reverse running or selection of High/Low speed.
- Presentation of Motor/MCU diagnostics (MOTCONI).

The functional unit MOTCONI has the same functionality as MOTCON. The difference is that MOTCONI controls INSUM Motor Control Units (MCU) over the LONWORKS Network.

Drives Integration

For large control systems, built on Advant Controller 450, the connection to ACS 600 drive systems is made via Advant Fieldbus 100. Each fieldbus node connects up to 24 drives through an optical ring.

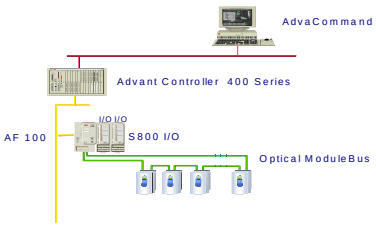

Figure 1-45. AC 400 configuration with drives

Information from the drives:

> Process values are sent as cyclic data, with an updating frequency decided by the application engineer. The data enables the control system to have access to basic information such as speed, current, torque and diagnostic information.

Information from the controller:

> A set point for speed or torque in percentage or absolute values can be sent. It is also possible to give commands to the drive, for example, start, stop and fault reset.

The operator support in AdvaCommand includes a number of drive specific displays and dialogs as well as the possibility to use functions such as system status, alarm and event handling and trend curves.

In order to minimize engineering efforts, a predefined type circuit is offered. It consists of control logic for a drive in a system with Advant Controller 450.

Variable Speed Drive Control

Variable-speed motor drives can be directly connected to Advant Controller 450 via a specialized interface board that resides in the controller. The board contains a pulse counter for accurate rotational-speed measurement and outputs a compensation signal to an analog converter. The accuracy normally associated with digital drives only is also made available to analog drives. The board exchanges setpoints, measured values, start and stop commands and indications with the drive controller.

Central Operator Station Support, Adva Command, MasterView 800/1

Using a central operator station, for example Advant Station 500 Series or MasterView 800/1 Series, provides a powerful operator interface to the process control. For further information, see the appropriate operator station documentation.

The main areas of support from Advant Controller 450 are summarized as follows:

- Object data base
- Alarm and events
- Group Alarm
- Reports
- Trend Data Storage
- Status List
- System Status List.

1.7.9 Operator's Interface

Advant Controller 450 offers a range of interfaces to operators of different categories. A short presentation is given below. For detailed information, see separate documentation.

1.7.9.1 Maintenance Personnel

The main purpose of this type of interface is to support fault tracing and backup handling of the application program. There are:

- Start mode selector, LED indicators and character display on the processor module
- Diagnostics LED indicators on most hardware modules
- Configuration tool setup for fault tracing and backup handling.
  Otherwise, the normal use of a configuration tool is to configure the controller. It would also be used to adjust and change the application in a level not reachable from an operator station.

1.7.9.2 Local Operator

Mimic Panel

Two alternatives are possible:

- Panel units, for example numeric display, keyboard, function keyboard, push button and thumbwheel connected via Modbus protocol.
- ABB Active Mimic Controller.
  An Active Mimic Controller module makes it possible to control active mimic panels from an Advant Controller 450 via one or more RCOM links. You can use the module for local collection of inputs from push-button switches (PBs), for updating of LEDs or lamps, and for control of an alphanumeric text display.
  The display unit displays a number of text strings with 20 or 40 characters. These text strings are programmed according to the customer's specification and located in a text-PROM on the Active Mimic Controller module.

  You place the module in large control room mimic panels or in traditional control desks, or use it for small distributed operator panels in the process area.

Local Operator's Station

Two alternatives are available:

- MasterView 320
- Personal-computer-based operator station.

The operator's station **MasterView 320** is a VT100-compatible terminal connected to Advant Controller 450. You can connect two MasterView 320 terminals.
You can create and present process displays in each MasterView 320 terminal. Each display can include both static and dynamic information. The static information, that is those parts of the display which remain the same during operations, consists of an optional number of text strings. Dynamic variables with optional appearance which are presented on the display screen are varied by the PC program via the data base and can consist of real numbers, integers or Boolean variables. The operator can intervene in the process by changing, via the keyboard, the data presented in the display.

You can also program, directly from the MasterView 320, certain keys to give signals to/from the PC program, which in turn can affect the process directly. MasterView 320 is provided with an event-handling function which permits the storing up to 100 events for each terminal.
Of these events, 16 can be presented on the display screen at one time. The event messages are sent to the MasterView 320 terminal and can be programmed with a special PC element, EVENT. You can present the event list on a display and/or you can obtain a copy of the event list as a printout if required. Dialog and error texts associated with the MasterView 320 function can be presented in different languages, which can be defined with the configuration tool.

Figure 1-46 below shows a monochrome VT 100 terminal with keyboard.

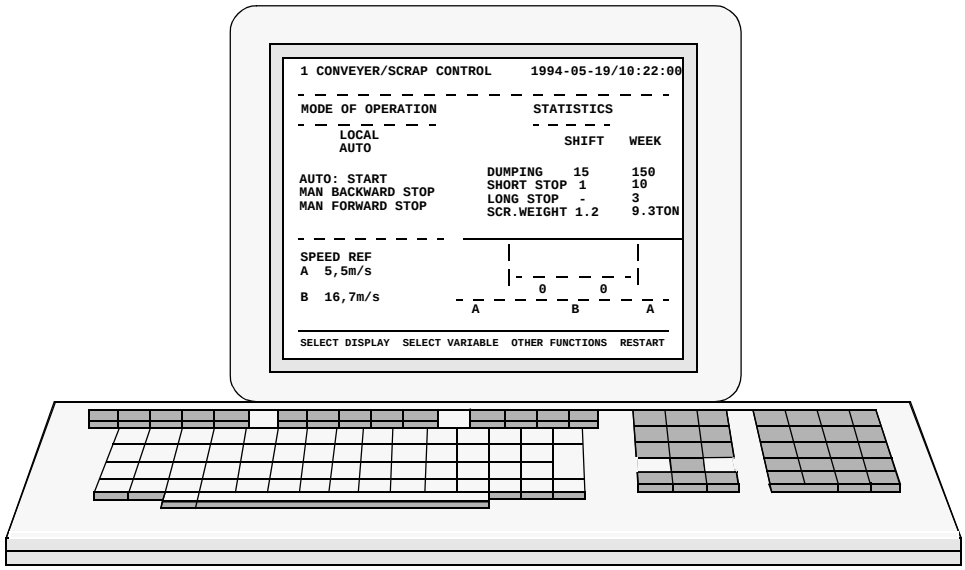

Figure 1-46. VT100 Terminal and Keyboard for MasterView 320

A feature you are offered when you use a personal-computer-based operator station is that it can be connected via the communication link RCOM and a dedicated, or a public, telephone network. However, you must be aware of its limited performance.

1.7.9.3 Central Operator

A central operator station of the Advant Station 500 Series or MasterView 800/1 type provides a powerful operator's interface.

Examples of the main functions are as follows:

- Presentation of user-designed process displays, standard displays, curve displays and reports
- An effective operator's dialog for manual control
- Alarm and event presentation
- Presentation of the status of the control system
- Display design "on-line" directly on the display screen
- Handling of group alarm
- Presentation of the status of signals
- Presentation of trend curves.

The central operator station communicates with the application program and the process is controlled via the signal and object files in the data base of the Advant Controller 450.

All of the information about the process signals connected and the process object are stored in these files (see Figure 1-47 below).

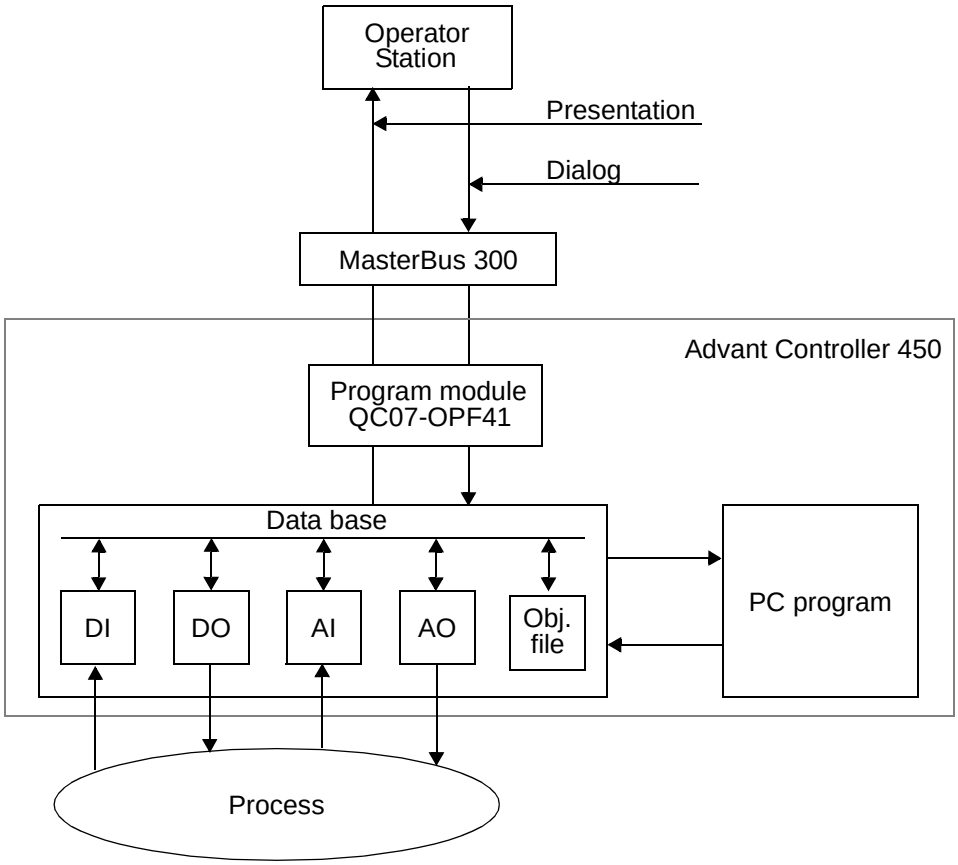

Figure 1-47. Communication, Operator Station-Controller-Process

1.7.9.4 Printer

You can obtain printouts of reports, generated in the report function, or paper copies of event lists when a MasterView 320 is included, with a printer connected to an Advant Controller. For further information on the primary use of a printer for generating reports, see Section 1.7.8.3, Control Functions, under the heading Reports.

The printer requirement specification is given in Section 3.2.6.3, Printer.

1.7.10 Availability and Security

Many factors affect the reliability and availability of a control system. Redundancy is perhaps the first thing to reflect upon, but it is never the most important factor. Basic system properties of the Advant OCS are, in general, more important.

Advant OCS is designed to satisfy extreme demands for reliability, availability and security.

For further discussion of various aspects of reliability, availability and security, see separate documentation. Some keywords follow:

- Solid mechanical and electrical construction
- Security against electrical interference
- High-quality components
- Well-tested electronic units
- Thoroughly developed and tested modular software
- Easily interpreted program language for application programs, AMPL
- Complete documentation
- Integral supervision and diagnostic functions
- Powerful tools for testing
- On-line replacement of faulty hardware units
- After-sale service
- Redundancy.

Below you can find important information regarding security. Descriptions of the provided diagnostics and the possibilities of redundancy in the Advant Controller 450 also follow.

Process Outputs Behavior at Interrupts

From the viewpoint of security, the behavior of the control outputs to the process in connection to ordered or unintentional interrupts is very important.
Advant OCS has a straightforward philosophy: all process outputs are controlled to zero (loss of elevated zero) and relay outputs are de-energized.
Unintentional interrupts are caused, for example, by the following events:

- Fault in central processing unit and memory
- Loss of power supply
- Fault in power supply
- Fault in parallel bus communication (backplane bus on CPU and I/O subrack).

In spite of the fact that an Advant Controller 450 is a very reliable system, reset of outputs to zero cannot be guaranteed during all conditions. Always assume a combination of errors or an incorrect system handling which can cause an output to behave in an unexpected way. This is of great importance when it comes to personnel safety and preventing expensive technical equipment from being damaged.

Duplication for Security

Duplication of control system functions is one way to ensure that all tasks are performed correctly. It is, however, very important to emphasize that the security in a process control system, when it comes to personnel safety, must never be based on duplication of system functions alone. You must always consider other measures as well.

Integrated Safety System

In the most critical applications, a special design of the Advant OCS, the Master Safeguard, is applicable. It is fully compatible with the rest of the Advant OCS products, including Advant Controller 410/450. Master Safeguard operates on the same network and from the same type of operator stations. Functionally, the Master Safeguard is almost identical to an Advant Controller 410/450, and is configured and documented in the same way.

1.7.10.1 Diagnostics

System level diagnostics, including the Advant Controller 450, have an error reporting and indicating structure that makes use of system messages, console diagnostic displays and LED status indicators to indicate the status of hardware.

Comprehensive system diagnostics not only detect problems, but also let an operator know where a problem is located. The diagnostic features of the system provide for timely, reliable detection and notification of both software and hardware errors.

The diagnostic philosophy for the Advant OCS is that single-fault situations are detected and processed.

The diagnostics support the maintenance philosophy of fault isolation and replacement down to module or subassembly level.

A survey of the fault announcement in Advant Controller 450 follows. The diagnostics built in to different modules and system functions are mentioned briefly. You can also find more information on LED indications and so on, in connection to module descriptions. For a detailed description of the use of diagnostics, among other things, see Chapter 5, Maintenance.

Run/Alarm Relay

The Advant Controller 450 provides one collective run/alarm relay for each processor module. These relays are included in the supervision module TC520. The indicating contacts can be reached via a connector on the module front. Within the limits of electrical data, you can use this contact in any desired application function, for example, creating an audible alarm or interlocking certain process objects in the event of a controller safety shut-down.

The main reasons for de-energizing the alarm relay and **opening** the alarm contact are:

- Fatal Error in CPU and memory
- Fatal Error in program execution
- Loss of power supply in the controller subrack
- Switch over depending on loss of communication on S100 I/O bus extension if redundancy.

NOTE

Only a single contact function per processor module is available. They are normally closed but are open when there is an error.

LED Indicators

Most of the replaceable hardware modules are equipped with LED indicators.
A green LED indicates running.
A red LED indicates fault.

Some modules provide additional yellow LEDs for increased maintainability, for example send and receive information on communication modules.

Indications in Application Software

Diagnostics information is available in the data base and in PC elements, which means it is possible to build up, for example, different control strategies with respect to the status of relevant functions and hardware modules. It is also possible to arrange external fault announcement of internal controller disturbances and faults.

System Messages and System Status

If the controller is included in a control network with a central operator station such as Advant Station 500 Series Operator Station or MasterView 800/1, the following facilities apply.

- System messages:
  - Give information about probable cause of malfunction in coded form or plain language.
- System status displays showing fatal or non-fatal errors in:
  - Controller total function
  - Redundant functions
  - Processor module
  - Power supply
  - Auxiliary functions like fans, and so on.
  - Communication
  - Connected terminals and printer
  - Process I/O boards and units.

Most of this information is also available with a connected engineering station, but the engineering station is not arranged to suit an operator.

Diagnostic of CPU and Memory

- Time supervision of operations
- Continuous parity check of RAM
  - One-bit errors are corrected automatically
  - Two-bit errors results in safety shut-down.
- Total check of RAM during start-up
- Supervision of checksums on program card
- Supervision of bus error.

Program Execution Check

Execution check by "watchdog" is carried out with respect to three priority levels. Task reference, supervision time and consequences at exceeded time are given below:

- Timer task - 100 ms - safety shut-down
- Application program - 5 s - safety shut-down
- Idle task - 30 minutes - system message about a system too heavily loaded.

Diagnostic of I/O Modules

All I/O modules are checked regarding missing hardware or errors in the addressing logic. It is common to all I/O modules that, if any error is detected, an alarm and a message go to the operator. The error is also indicated with a red LED on the front of the board. The application program handles necessary actions via the data base. Different types of I/O modules have adapted diagnostics and error handling. For further information on this topic, see Chapter 5, Maintenance.

Diagnostic of Power Supply

- Supervision of the internal 24 V supply and the stabilized 5 V supply
- Applicable supervision of power supply for sensors
- Supervision of the battery backup supply.

Other Diagnostics and Error Handling

Adequate diagnostics and error handling are also available/possible for the following equipment and functions:

- Communication links
- Terminal/printer connection
- Fans
- Redundant functions in general.

Supervision Module

The System Status Collector TC520 in the controller subrack performs certain system supervision. Diagnostic signals from power supply units and fans within the cabinets are connected to TC520.

The front connector of TC520 provides the connection for four extra user-defined supervisory signals (24 V). Two of them are intended to be used for redundant I/O voltage supply supervision. The signal cables may not be extended outside the controller cabinets due to the risk of interference.

1.7.10.2 Redundancy

In general, the following subsystems and functions are available with redundancy:

- Mains distribution network
- Voltage supply, 24 V
- Voltage regulation, 5 V
- Battery and charger
- CPU and memory
- Network communication
- GCOM
- MVI (Multi Vendor Interface) communication
- RCOM
- MasterFieldbus
- Advant Fieldbus 100
- S100 I/O Bus extension
- I/O module.

You can add redundancy within a specific controller in a flexible way to meet the desired demands upon system availability.

The controller utilizes different principles of redundancy for included subsystems. Both hot stand-by and independent parallel operation are used. Duplicated hardware is primarily used in what is known as 1:1 implementation.

Maintainability is always provided by diagnostics, fault announcement and adequate unit exchangeability.

Mains Distribution Network

Redundant a.c. networks, or a combination of an a.c. network and a d.c. network, are primarily connected to separate circuit breakers and power supply units. Secondarily, at 24 V level, the two networks are wired by diodes. The controller always needs an a.c. supply for use by certain external equipment such as modems. In the case of redundant a.c. networks, automatic relay devices are used to maintain the power supply in case of a single network error.
The duplicated equipment is normally in parallel operation, sharing the load. In the event of a single failure, the full responsibility is taken over bumplessly by one piece of equipment.

Power Supply, 24 V

Duplicated power supply units for 24 V d.c., secondarily wired by diodes, are utilized.
This is the same redundancy solution as for mains distribution network. The wiring diodes are distributed to the 5 V voltage regulators in the controller subrack. When redundant powering of I/O subracks is desirable, a voting unit is used.

Voltage Regulation, 5 V

The stabilized 5 V supply is organized as n+1 parallel voltage regulator modules sharing the load current. The n modules are required to meet the demand. The extra module gives what is known as n+1 redundancy. In the event of a single failure, the full responsibility is bumplessly taken over by the remaining equipment.
The n is equal to 1 in the standardized Advant Controller 450.

The 5 V supply is distributed as single supply to each module.

Battery and Charger

You can duplicate the battery unit and the backup power supply. The main reason to duplicate is to double the battery capacity.

Processor Module

Processor module redundancy is available. In this case, the controller contains two processor modules, each including memory for system and application software. One processor module is acting as primary, the other is backup (hot stand-by). The primary processor module controls the process. The backup stands by to take over in case of a fault in the primary. The changeover is done bumplessly and in less than 25 ms. During the changeover, the process outputs are frozen.

Following a changeover, the system operates as a system without redundancy with only one processor module in operation. You can replace the malfunctioning processor module while the system is running. After the replacement is carried out, the system once again has a redundant processor module.

If an error arises in the backup unit, you can also replace the backup unit while the system is running.

Errors which occur in the backup unit can never affect the primary unit's operation. The primary unit and the backup unit are logically separated from one another.
Hardware errors in the primary processor module cause the system to perform a correct changeover. These hardware errors are "single errors."

The application programming and the communication are totally unaffected by the redundancy.

Processor Module - Fault Tolerance Principle

The principle of fault tolerance in the redundant processor modules is based on continuous updating of the backup unit to the same status as the primary unit. This enables the backup unit to assume control without affecting surrounding systems in a bumpless manner.

This principle involves dynamic division of the program execution into execution units and the creation of rollback points at which the processor module's status is completely defined.

In this context, the processor module's total status is defined as the processor module's internal status, that is, the contents of the processor registers, plus the contents of the data memory.

The backup unit's status is updated each time the primary unit passes a rollback point, enabling the backup unit to resume program execution from the last rollback point passed, should the primary unit fail due to error.

In order to minimize the amount of information involved in the update, the backup unit is updated only with the changes taking place since the latest rollback point.

Between rollback points, these changes that writes in the data memory, are stored in a log buffer in the backup unit. At a rollback point, the processor's total register contents are also written into the data memory, so that this information is also logged. Once the rollback point is established, the logged write operations are transferred to the backup unit's data memory.

If the primary unit fails because of an error, the backup unit resumes execution from the last rollback point, which means the last execution unit is partially re-executed by the backup unit. In order to re-execute a portion of the execution unit without affecting the peripheral units (I/O and communication units), the peripheral units' references are also logged between rollback points. During re-execution, the results of the peripheral units' references, which have already been executed, are used, rather than re-executing them. The results of read operations are retrieved from the log, and write operations pass without execution, since they have already been executed. The peripheral units' statuses, then, are not affected by the re-execution in any way, except for the time delay which occurs.

The RAM included in the processor module provides automatic error detection and error correction.

- If one bit becomes incorrect in a storage location, this is corrected automatically. If the error repeats, a system message is sent to warn that the memory is about to become defective.
- If two bits become incorrect in a storage location, the system changes over to the backup unit.

Network Communication

There are two alternatives for network communication redundancy available.

Normally, the duplicated submodules are distributed to separate carrier modules, an arrangement which provides maximum availability. See Figure 1-48.

You can also mount duplicated MasterBus 300 communication submodules in a common carrier module. This gives rise to a common point of failure, that is, reduced integrity and reduced availability.

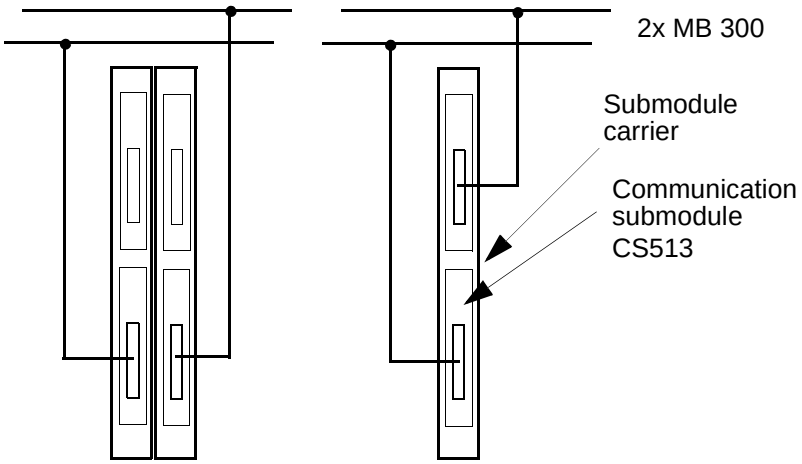

Figure 1-48. Network Communication, Alternative Module Arrangement

From a functional viewpoint, the redundant networks work in a hot stand-by implementation. This means that the primary network has the communication responsibility. The secondary network stands by to take over in case of a fault in the primary network. In the stand-by mode of operation, basic messages for diagnostics are continuously sent and received.

GCOM

The information given above for the network communication is also applicable to GCOM, except for the communication submodule which for GCOM is called CI543.

MasterFieldbus

The communication to a remote unit can be equipped with transmission media redundancy. This includes:

- One communication interface submodule in the controller
- Two cables including duplicated modems
- One remote unit.

Advant Fieldbus 100

The Advant Fieldbus 100 redundancy concept comprehends:

- Media redundancy
- Communication interface redundancy.

Media redundancy includes redundant cables and redundant modems.

Communication interface redundancy is achieved by using two interface modules CI522A connected to a media redundant bus.

S100 I/O Bus Extension

S100 I/O Bus Extension redundancy is available. In this case each I/O rack contains two bus extenders. Each bus extender is connected to one processor module. The bus extenders that is connected to the primary processor module is acting as primary, the others are backup (hot stand-by). A faulty bus extender causes a processor module changeover by stopping the primary processor module. The previous backup processor module is now acting as primary processor module and previous backup bus extenders, connected to the new primary processor module, are primary bus extenders.

A changeover, due to a faulty bus extender, is only activated when all backup bus extenders are functioning. If a faulty backup bus extender exists, when any of the primary bus extenders is detected as faulty, the faulty primary bus extender is marked as erroneous and a system message is presented.

You can replace the malfunctioning bus extender when the system is running. If an error arises in a backup bus extender, you can also replace the backup unit while the system is running.

Errors which occur in the backup unit can never affect the primary units operation. The primary units and the backup units are logically separated from one another.

The application programming and the communication are totally unaffected by the redundancy.

I/O Module

The controller primarily uses single process functions, for example transmitter, valve, or switch. However, for the categories analog input and analog output, there are special I/O modules which can be duplicated. Different requirements for single loop integrity or signal redundancy are met. Please refer to Section 1.7.6.1, S100 I/O.

Duplicated hardware is kept together in the data base as one object. From a maintainability viewpoint, duplicated hardware is handled individually. Functionally, the redundancy is, however, invisible to the control application program. Duplicated hardware is wired in a common terminal panel or connection unit.

You can mix redundant and non-redundant I/O modules in any application-adapted way.

It is preferable that you distribute redundant boards to separate I/O subracks.

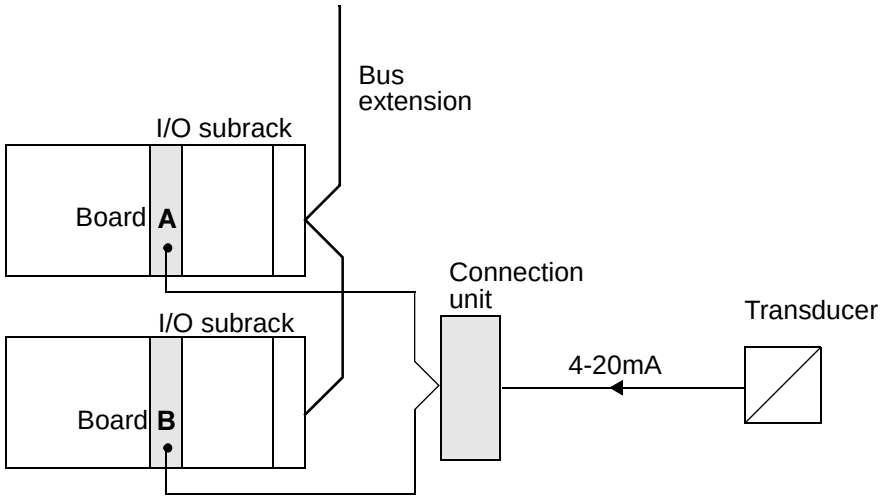

Figure 1-49. Arrangement of Redundant I/O Modules

The principle of redundancy is hot stand-by or parallel operation, depending on the design of each module. For example, analog inputs use hot stand-by. Analog outputs use parallel operation.

1.7.11 Mechanics

1.7.11.1 Cabinets

Available Cabinet Types

An Advant Controller 450 is normally installed in one or several cabinets, depending on the number of centrally connected process I/O signals. The cabinet type is RM500 and it is available in two versions with different dimensions (RM500V1 and RM500V2).

Single as well as double cabinets are used to house an actual installation, or a combination of single-double cabinets (not screwed together on delivery).

Cabinet Features

Figure 1-50 shows a cabinet of the RM500 type. Features and applications are listed below:

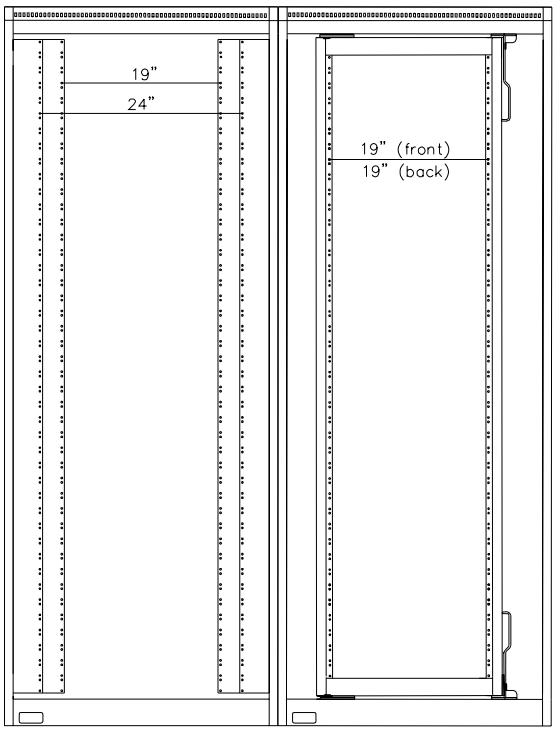

Figure 1-50. Cabinet, type RM500

- RM500 is prepared for installation of subracks, process connection units and terminal blocks. Subracks are used to house circuit boards and other plug-in units.
- RM500V1 features a 19-inch and a 24-inch installation width. The latter is applied to process connection equipment. The 24-inch installation width and shallow cabinet design facilitates the installation and the maintenance. RM500V2 only features the 19-inch installation width.
- Entrance to the rear of the cabinet is not necessary. Controller hardware is physically installed and electrically connected from the front.
  Certain equipment, like the S100 I/O subrack, is mounted in a hinged frame in the cabinet. This enables entrance and possible maintenance and repair of parts of the subrack which are only accessible from the rear, for example, units for voltage regulation.
- The cabinet front door is hung at either the left-hand or the right-hand side adapted to the final cabinet configuration determined at the design. Please check that the position of the hinges is acceptable with respect to the final location of the cabinets on site.
- A double door variant is available for the RM500V1.
- Process wiring usually enters through the floor of the cabinet.

- Normally, there are no intermediate walls between cabinets designated to one controller installation.
  Intermediate walls are used between different controllers in a row of cabinets or between a controller and other equipment to suppress interference.

Environmental Adaptation

RM500 cabinets are available with the following degree of protection ratings according to IEC529; IP21, IP41 or IP54.

Independent of the protection rating, the controller subrack is, for cooling purposes, always equipped with a fan unit.

IP21, the basic version of the cabinet, is ventilated by openings in the lower and upper end of the door.

IP41 is ventilated by openings in the lower and upper end of the door. The openings are covered by netting with openings 1mm^2 or less.

NOTE

A heating element is mounted in the bottom of the IP41 cabinet. This heating element shall be activated when the equipment in the cabinet is inactive.

The sealing in IP54 results in a decrease of permitted power dissipation compared to IP21 and IP41. Please refer to Section B.6, Permitted Power Dissipation. Actions must be taken in certain applications, for example, a heat exchanger can be installed.

Electro Magnetic Compatibility and CE-marking

Advant Controller 450 meets the requirement specified in EMC Directive 89/336/EEC and in Low Voltage Directive 73/23/EEC provided appropriate cabinetry is used. You should request for compliance and CE-marking when you order the equipment. You can obtain CE-marking for all standard cabinets.

For further information about the environmental immunity, including EMC qualities with or without CE-marking, please refer to the data sheet *"ABB Master Environmental Immunity*".

Cabinet Configuration

Depending on the number of circuit boards necessary to control the process, an Advant Controller 450 installation can contain up to one controller subrack plus five I/O subracks located in up to six cabinets.

The controller subrack is always installed in the left-hand cabinet.

Single or double cabinets are used. Only the last one (to the right) can be a single cabinet.

I/O subracks and their associated connection units are, where possible, located in the same cabinet.

You can add an extra cabinet (number seven) to the right of a given configuration, if necessary, to house connection units. This cabinet cannot contain an I/O subrack.
For connection units in the extra cabinet, use extended-length cables to join the I/O subracks.

The controller subrack is mounted close to the rear backplane of the cabinet.

An I/O subrack is mounted in a hinged frame while the connection units for the different I/O boards are mounted in the rear backplane. Use the 24-inch installation width for the connection units in RM500V1.

Figure 1-51 shows a **typical** cabinet configuration in a RM500V1 cabinet.
The location of subracks, connection units and power supply equipment is standardized. However, the design is always adapted to the actual application and shown in the delivery-specific documentation.

All units in the cabinet are identified in accordance with the item designation system used for the Advant OCS products. See Appendix D, Item Designations

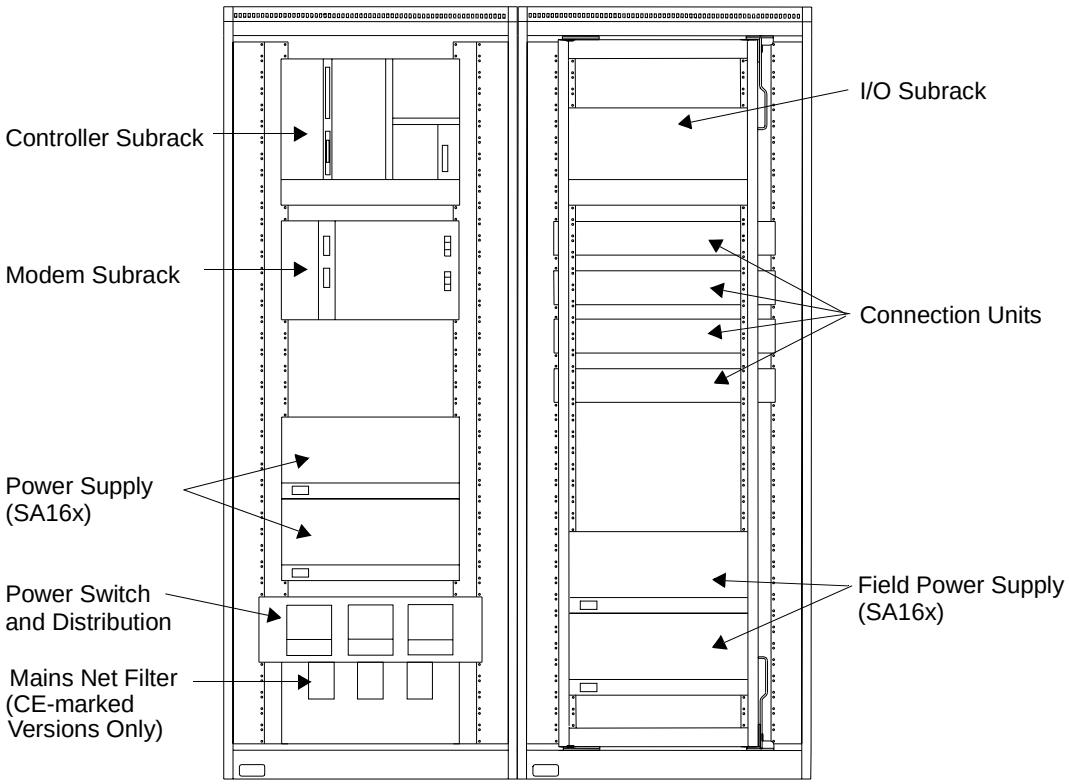

Figure 1-51. Typical Cabinet minimum Configuration, Redundant Power Supply

1.7.11.2 Subracks

Many of the Advant Controller 450 components are installed in subracks. Subracks are fitted with guide bars for circuit boards and other plug-in units. Each unit is connected to the backplane of the subrack. There are two variants of subracks, both based on a 19-inch standard: a controller subrack which houses the processor module and the various communication modules and an I/O subrack which houses the S100 I/O.

Controller Subrack

This subrack exists in one standard height, 400 mm, which includes a cable duct and fan unit.

The disposition of slots is shown in Figure 1-52.

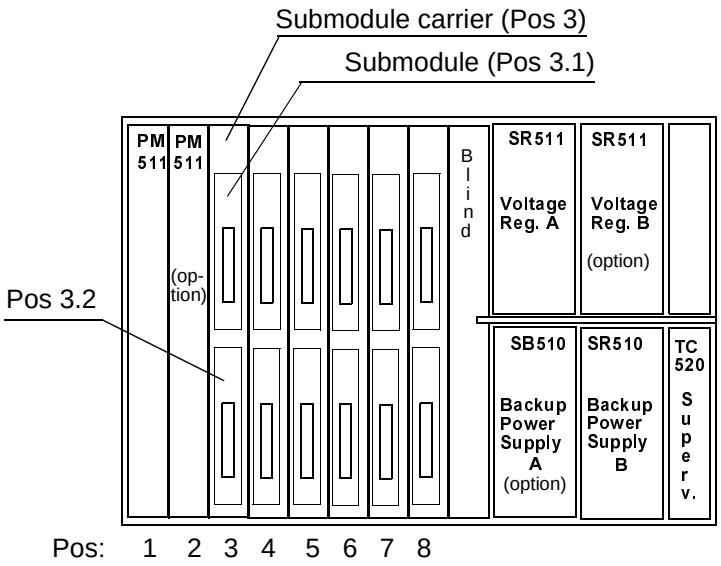

Figure 1-52. Advant Controller 450, Controller Subrack 9S

All modules are individually fixed to the subrack with a locking device.

All connections are made from the front.

I/O Subrack

The controller subrack cannot accommodate any I/O boards. If S100 I/O is desirable, you must expand the system with one to five I/O subracks.
An I/O subrack can contain up to 20 (19 in case of S100 I/O Bus Extension redundancy) I/O boards plus one or two bus extension boards which has both voltage supervision and bus-extension functions. An I/O subrack is connected to the controller subrack and to the next I/O subrack via the bus extension board, position 21 (20 and 21 in case of S100 I/O Bust Extension redundancy).

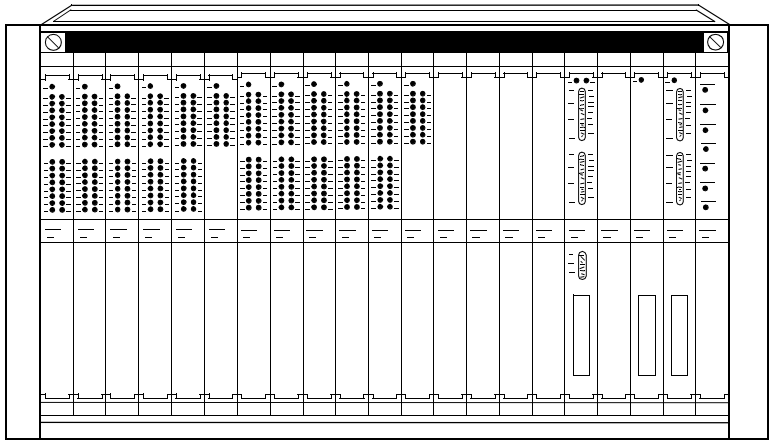

Figure 1-53. Front of I/O Subrack

A locking bar at the upper front edge fixes the I/O boards once they are inserted.

An I/O subrack can be powered by a single 5 V regulator unit or redundant 5 V regulator units located at the rear of the subrack.

A connection unit with screw terminal blocks for field connection of the process signals is provided for each I/O board. You can usually disconnect process objects individually or in groups with a disconnectible type of terminal block. The connection units are connected to the I/O board via standard cables and are mounted in the rear plane of the cabinet.

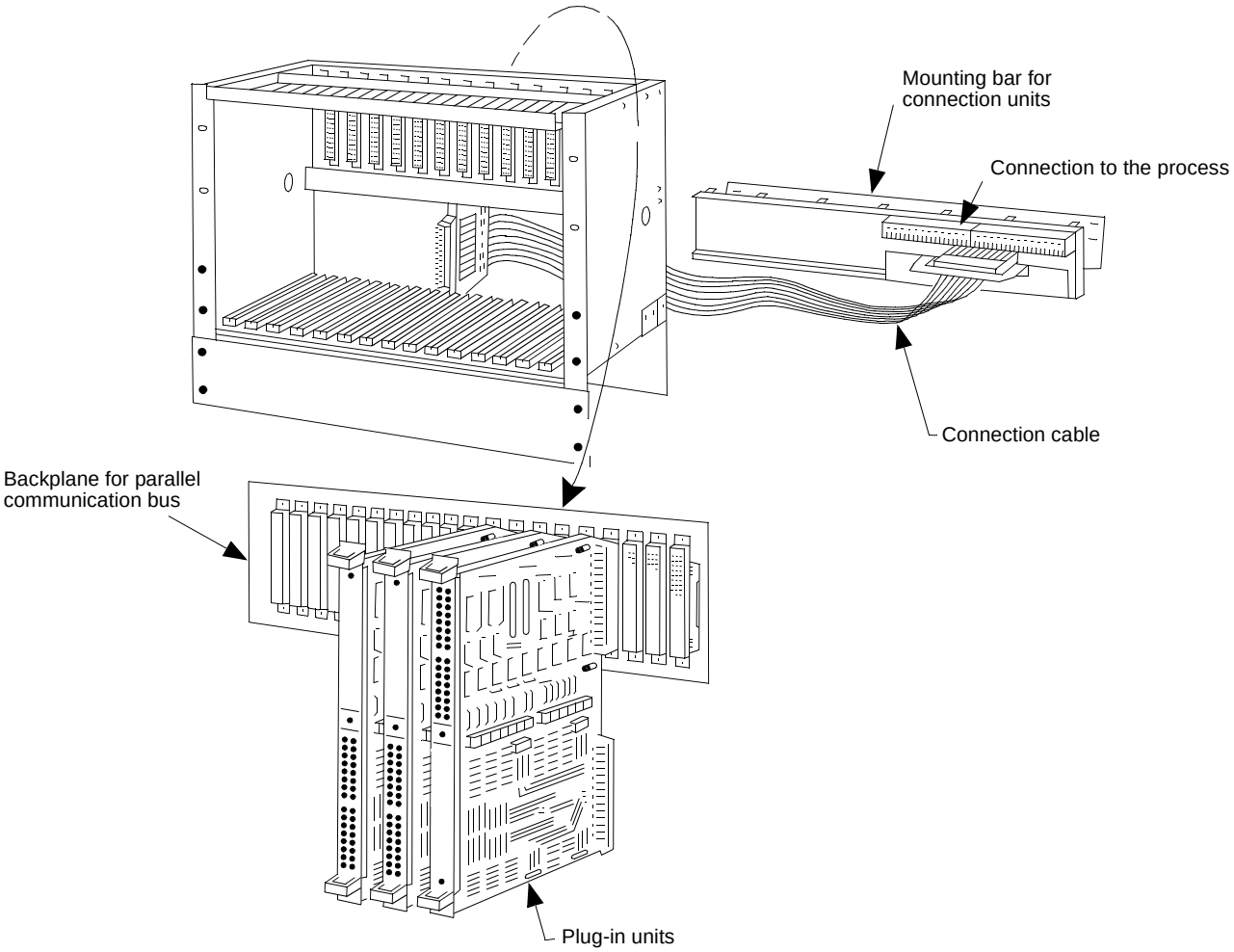

Figure 1-54. I/O Subrack Configuration

The rear side of an I/O subrack must be accessible. This is achieved by mounting the I/O subrack in a hinged frame.

1.7.11.3 Submodule Carrier and Submodule

Submodule carriers are modules which fit the controller subrack only.
Carrier modules have no complete function. A carrier module has slots for specialized submodules.
You can obtain the desired functionality by mounting submodules into the carrier module. This is illustrated in Figure 1-55.

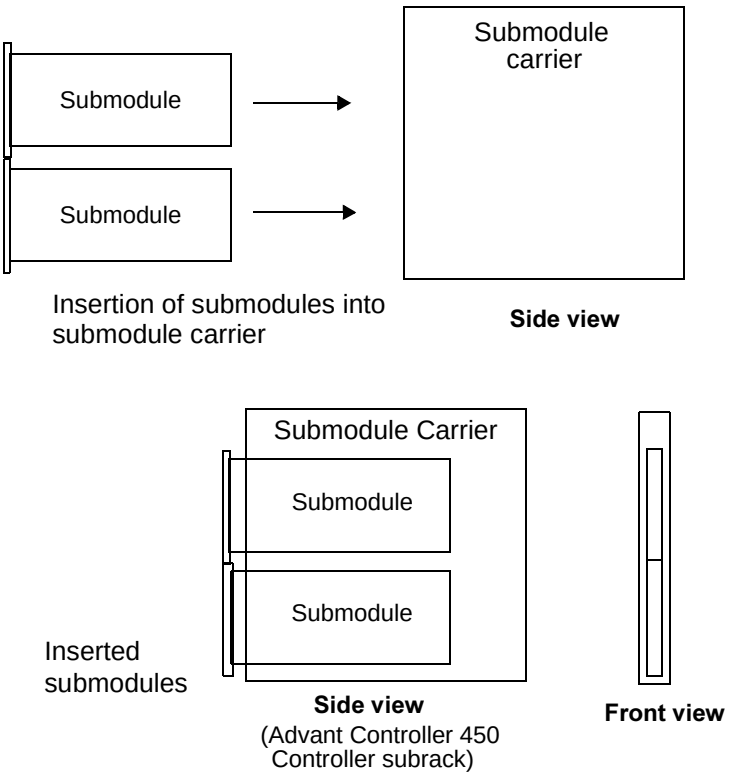

Figure 1-55. Carrier Module and Submodule Mechanics

One submodule carrier usually houses two submodules.

In principle, the one submodule is independent of the other submodule. This means you can insert, start, stop and remove the one submodule without affecting the other submodule.

The submodule carrier is a single point of failure. Damaging the carrier module may affect one or both submodules. Replacing the carrier module, however, obviously affects both submodules.

Mechanically, any submodule fits into any submodule position on Advant Controller 450. The software does not, however, necessarily support all combinations.

1.8 User Interface

A normal controller installation uses different operator's interfaces. A division into two main categories can be seen with respect to their applications:

- Operator's interface for process control.
  - Operator stations
  - Mimic panels
  - Printer.
- "User interface" for the controller seen as a computer resource.
  - System maintenance.

These different facilities are presented in the product overview description, see Section 1.7.9, Operator's Interface.

The "user interface" application is described in detail in Chapter 4, Runtime Operation and in Chapter 5, Maintenance.

Chapter 2 Installation

This chapter contains guidelines for planning the installation of your Advant Controller system, see Section 2.1, Site Planning Environment. In addition, this chapter also describes the concrete installation procedures on site, specific to Advant Controller 450, see Section 2.2, Setup.

This chapter does not, however, provide a complete list of measures to take with respect to environment and other conditions on site. The equipment should be adapted to the actual application by way of thoroughly accomplished system definition, ordering and design. You can find descriptions of alternative solutions, design considerations, elsewhere in this manual.

Since each Advant Controller system is designed to meet your specific requirements, there is no standard configuration that describes every system. Therefore, certain areas of the following instructions are meant only as a guide for planning your specific installation. However, some of the information covers specific requirements for proper system and equipment operation - you cannot modify these requirements. The difference between a recommendation and a requirement is clearly defined as necessary.

Installation of options is often described in dedicated user's guides. For information about available documents corresponding to desired options, see Section 1.4, Related Documentation.

All information given in this chapter relates to standardized models. Where alternatives exist, a typical alternative is described.

2.1 Site Planning Environment

2.1.1 Site Selection and Building Requirements

When you are planning a control system installation, please consider the following points, among others:

- The surrounding environment and atmosphere.
- The temperature in the room where the equipment is to be located.
  This includes an estimate of the resulting temperature rise with respect to the power dissipation from the planned equipment.
- The proximity of the control room to the process.
- The size and shape of the control room which is to accommodate all the required equipment.
- The lighting for a control room, which should be powered by a power source independent of the system equipment. A battery-powered emergency lighting system is recommended.
- The minimum distances from a cabinet to walls and ceiling required to obtain satisfactory results from different areas.
- The weight of the equipment and the corresponding requirements of the floor construction.
- Ease of access for moving equipment in and out of the control room.
- Space, suitably furnished for maintenance.

- The free space in front of cabinets. Also reflect on how much space is required to fully open either a left-hand or right-hand hinged cabinet door (both exist). There must always be space left for safety reasons even with open doors.
- Spare area for future enlargement of the equipment.
- A well-developed process connection, with or without marshalling facilities.
- Grounding by an effective net of copper bars.
- Cable routing with respect to installation rules.
- Availability of power and other utilities.
- Standards and legal regulations to be followed.

The following sections examine some of these factors in detail and provide recommendations and requirements as necessary.

2.1.2 Environmental Considerations

General

The Advant Controller system is designed for a demanding industrial environment. Alternative cabinetry is available for different degrees of protective rating (IP21, IP41, IP54). Interference from electrical sources is suppressed by a suitable solid design and particular installation rules. Equipment is to be located in a control room or an electric room or distributed in the process area.

The common requirements for the building where the system is to be stored or installed are:

NOTE

The building should provide an environment such that established environmental conditions are not normally exceeded.

The environmental conditions which Advant OCS products are designed to withstand, during storage and transport as well as during operation, are specified in a separate environmental data sheet. Limit values are given to: Corrosive gases, Temperature, Vibration, Moisture, Electro-Magnetic Compatibility, and so on.

Most applications need no special arrangement. Standard cabinetry and installation according to the rules suffice. Occasionally, you must consider special protection with respect to particular situations.

Sealed cabinets are a good basic solution to prevent damage to electronic equipment from, for example, corrosive gases, moisture and dust. However, sealing prevents the normal cooling resulting from self-convection or forced cooling by a fan. In turn, this reduces, to a large extent, the heat dissipation permitted in a cabinet.

Some alternatives, in addition to those offered by other standard cabinets, follow:

- Sealed cabinet pressurized by clean, dehydrated instrument air.
- Gas cleaning by chemical filter.
- Use of dehydrated air.
- Dust filter.
- Sealed cabinet cooled by a heat exchanger.
  It is reasonable to assume that a heat exchanger may be inoperative for short periods. Under these conditions, the temperature in a cabinet must not exceed 70°C.

For further information about the environmental immunity, please refer to the data sheet *"ABB Master Environmental Immunity"*.

Temperature

It is important to note the temperature within cabinets and in the surrounding environment and atmosphere. Lower temperatures mean increased system reliability and availability.

The lives of wet, electrolytic capacitors and most semiconductors are greatly reduced if the maximum permitted temperatures are exceeded.

For more information on design considerations, see Section 3.1.10.2, Heat Dissipation Permitted in Cabinets.

Vibration

The cabinets must stand on a stable floor, deck or supporting structure, free from vibrations.

If the system equipment is installed in a control room adjacent to large machinery such as shakers or large presses, where frequent major vibrations occur, shock absorbers or an isolation pad may be required to protect the system equipment. Shock absorbers normally protect the equipment from sustained low-level vibrations (vibrations that are perceptible, but not excessive). If vibrations or shock are a major problem, consider more extreme measures to alleviate the problem.

2.1.3 Electromagnetic Compatibility

Interference-free operation requires well-considered planning and realization of the installation, especially with respect to grounding, cable selection and cable routing. Some notes are given in the following sections from a planning viewpoint, while the setup instructions give you detailed information about the actual realization of the installation.

For more information, both theoretical and practical, on the subject of Electromagnetic Compatibility including interference, interference sources and suppression measures, see separate reference documents.

You can obtain CE-marking according to EMC Directive 89/336/EEC for your Advant Controller 450 provided appropriate cabinetry is selected. Please, refer to the ordering documentation.

2.1.3.1 Summary of CE-marking Aspects

CE-marking of the Advant OCS products implies some minor but important changes of the design with respect to cabinetry, mains supply filtering and handling of cable shields. All to ensure conformity to the EMC-Directive 89/336/EEC.

The following is a summary of the most important changes.

Cabinet Floor Cover Plates

From an EMC Viewpoint mounting of floor cover plates is not necessary when EMC standard cabinets of the types RM5xx and RH5xx is applied. The close distance to the normally good floor earth plane is the reason.

Avoid the erection of fixed installed radio equipment close to and beneath the Advant Controller. For example in underlying floor plane.

The floor cover plates may be mounted by any other reason determined in the particular project.

Cabinetry

According to information given in the ordering documentation, Advant Controller 450 shall be located in a EMC-proof cabinetry. Please note that the requirement is valid to controller cabinet, I/O cabinet and connection unit cabinet, if separated.

Standard cabinet RM500 is EMC-proof in its basic design for protection class IP21, IP41, and IP54.

Open compartment is not permitted for any part of the controller and its I/O including distributed connection units.

Immunity against electromagnetic fields can generally be guaranteed with the cabinet containing metallic doors only.

Arrangement of Cabinets

Advant OCS mounted in a RM500 cabinet, can be set up side by side with other cabinet types and other equipment types, but the cabinet side plates must be ordered or not be removed if included at the delivery.

Where several electronics cabinets of the same type, related to one controller with S100 I/O, are to be set up in the same row, however, it is permissible to leave out or remove the side plates between the cabinets.

Mains Net Filter

Protection against line conducted radio emissions is obtained by means of a special filter placed in the bottom part of the cabinet on the incoming supply. One filter for each supply is utilized.

Communication Cable Shields

Communication cable shields which are to be directly grounded in the cabinet must be grounded to the cabinet chassis.

Shielded communication cables which are not directly grounded in the cabinet are to be connected via a capacitive decoupling device, located in the bottom of the cabinet.

2.1.4 Standard Layout and Disposition of Cabinets

A series of rules for mounting the controller and I/O in RM500 cabinets follows.
These configuration rules are applied when the customer has no preconceived ideas regarding the design. This is the standard solution, which is important to know when you are planning a control system. The complete list of rules are presented in ordering documentation.

General

- An Advant Controller 450 with I/O, ordered on one set of price lists, is designed with cabinets that are to be placed side by side (no plates between the cabinets).
- All cabinets (single or double) sharing the same bus extension for S100 I/O (maximum 12 m) are connected to the same power switch. Exception; cabinets housing I/O with object oriented connection units have a special arrangement, see figures below.
- An Advant Controller 450 with I/O is delivered in a number of single or double cabinets.
- Up to six cabinets, for example, three double cabinets, for the five possible I/O subracks can be connected to the same electrical bus extension. With optical bus extension other rules are applied.
- You can add an extra, seventh cabinet if necessary to house connection units. This cabinet is placed to the right and cannot contain an I/O subrack. Cables with extended length have to be used from the I/O subracks.
- An I/O subrack is not filled with more than 18 (17) in case of S100 I/O Bus Extension redundancy) boards, two empty slots are kept as spares for the future.
- The number of boards in an I/O subrack is limited to either the 18 (17) available slots in the subrack or the available space for connection units within the double (single) cabinet.
- In each double (single) cabinet, space for one mounting bar (for connection units) is left unused.
- The boards are placed in the I/O subracks in the order AI, AO, DO, DI starting in subrack no. 1.

Central Location of S100 I/O Cabinets

The configuration of central located cabinets is illustrated in Figure 2-1.

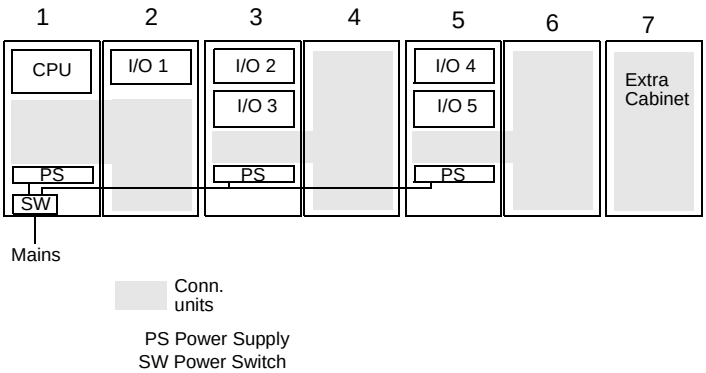

Figure 2-1. Standard Central Cabinet Configuration (maximum)

- Normal start configuration is a double cabinet (Nos. 1 and 2).
- With the controller cabinet to the left, the building direction is to the right.
- I/O subracks cannot be placed in cabinet 6 or 7, the bus extension cable exceeds 12 m.
- One set of power supplies for field equipment, if included, is placed in cabinet No. 2.
- Connection units are placed only within the same double (single) cabinet that houses the corresponding I/O subrack.

Distributed Location of S100 I/O Cabinets

With an optical bus extension you can distribute the I/O cabinets up to 500 m from the controller cabinet.

The configuration of distributed cabinets is illustrated in Figure 2-2.

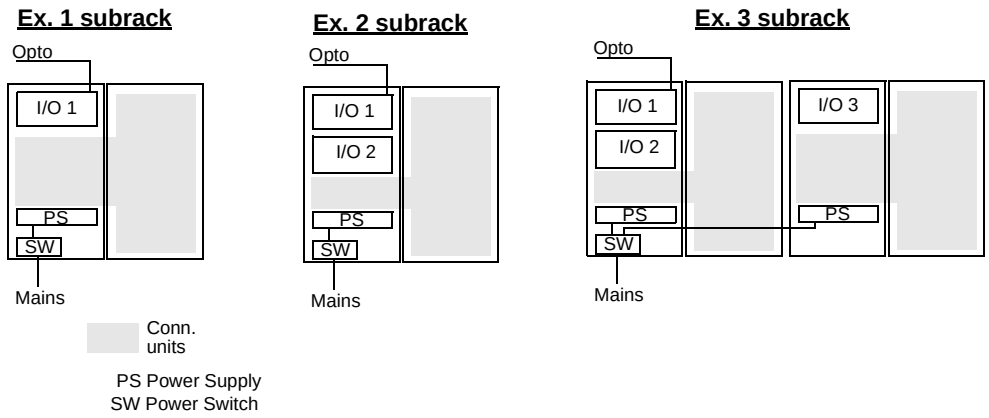

Figure 2-2. Distributed Location of S100 I/O Cabinets (Example of Cabinet Configuration)

- Normal start configuration is a double cabinet.
- The building direction is to the right.

S100 I/O with Object Oriented Connection Units

A variant of cabinet configuration is offered for this type of connection units. See illustrations in Figure 2-3.

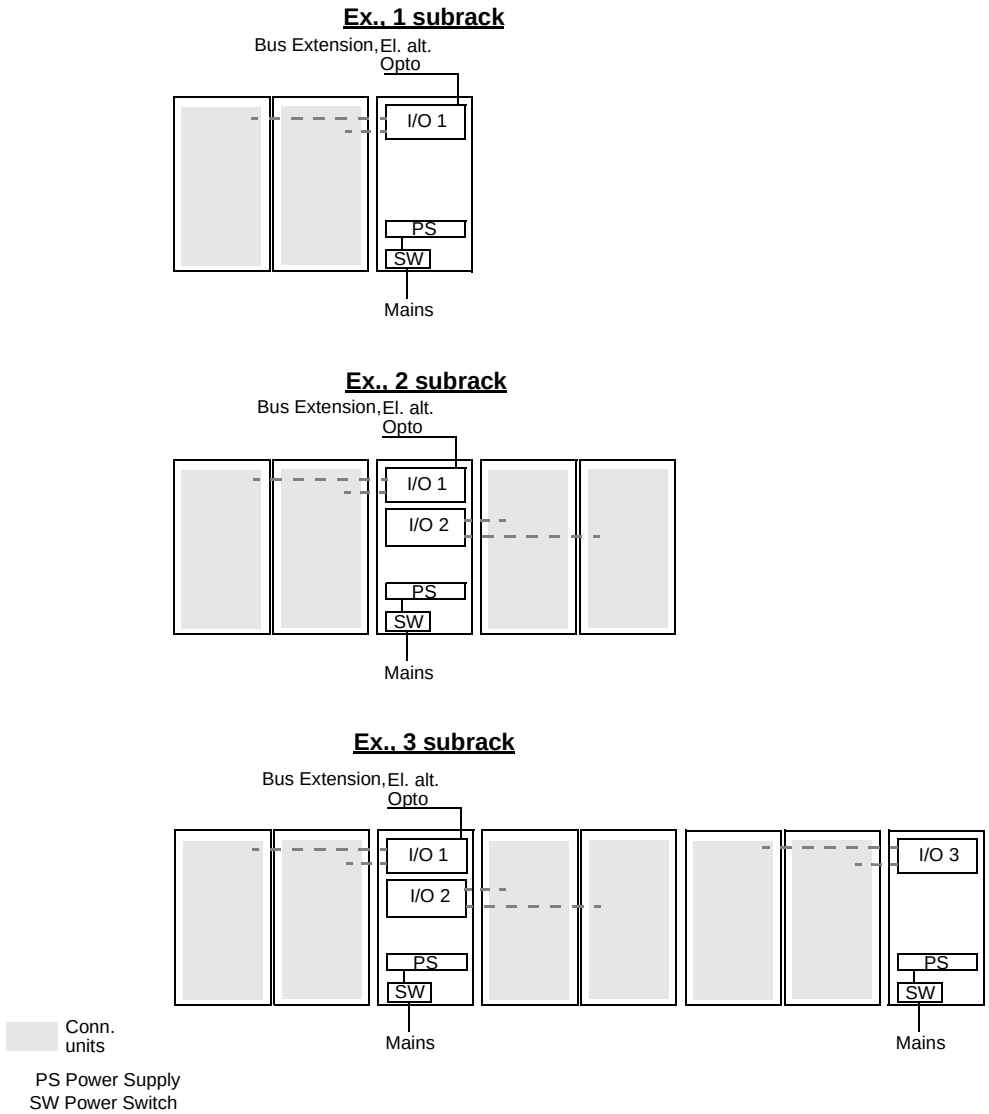

Figure 2-3. S100 I/O with Object Oriented Connection Units (Example of Cabinet Configuration)

- Normal start configuration is a double cabinet for the connection units and a single cabinet for the I/O subrack. Split delivery is possible.

You can obtain information about deviations from these rules upon request.

2.1.5 Grounding

Grounding in General

The signal processing electronics in Advant OCS, as well as all interference suppression for external signals, are normally directly grounded to chassis and plant earth.
The plant earth potential must be stable and well defined, even in the event of ground fault in low- and high-voltage equipment or lightning stroke. This claim for a grounding system is common to the high-voltage equipment. The earth line joining the grounding systems should be ≥35 mm^2 Cu.

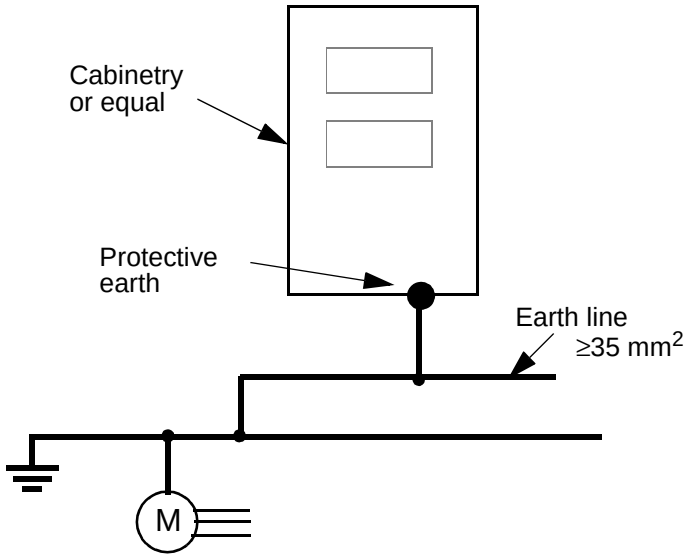

Figure 2-4. Grounding of Electronic Equipment

Protective Earth

Always provide Advant OCS cabinets supplied with 230 V a.c. with a protective earth.

Grounding of Signals and Voltage Supply

For minimum interference and maximum accuracy, it is normally most effective to ground the signals from transducers directly in the grounding bar in the Advant Controller. For freedom from interference, it is also advantageous to ground supply voltages for transducers, sensing voltage for contacts, load supply voltage, and so on.
You may have to deviate from these two basic rules in order to adapt to other requirements such as measurement techniques or safety regulations. In such cases, you must ensure that, for example, differential inputs for analog input signals are used or that digital inputs and outputs are divided into groups in the connection unit, with the possibility of supply voltage distribution and earthing in other equipment.

A consequence of requiring local grounding of a signal at the transducer location may be a requirement for a completely individual voltage supply to each transducer. This normally

hinders the use of connection units for voltage distribution. In such cases, you can use a bar with the terminal block and fuse equipment required by the application.

If the transducer has galvanic isolation of the supply from the electronics otherwise, you can ground its signal zero freely and where it is most suitable for measurement accuracy without special voltage supply requirements such as group division, fusing and grounding.

2.1.6 Cables

When you are planning for the cable routing in the plant and selecting suitable cables to use, there are some restrictions and rules to follow. These touch upon, among other things:

- The distance between Advant OCS cables and non-Advant OCS cables.
- The routing of communication cables.
- Mixing of signals and signal types within cables.
- The need for shielded cables.

For further information, please refer to the general document, *Interference-free Electronics Design and Applications*, which also gives examples for choosing cables.

All cables are normally guided into a cabinet from below.

2.1.7 Power Supply and Fusing

General

Normally, supply voltage to Advant OCS supply units and for field equipment can be obtained from the plant a.c. or d.c. supply.

A summary of the main requirements of the supply from a planning viewpoint follows.
Primarily an A, B and C network should be available as applicable.
Supply A and B refer to redundant networks.
Supply C is feeding the battery backup unit and modems which use a.c. power supply. In the tropical cabinet version the heating element is also included.
Supply C is always an a.c. supply, regardless of whether a.c. or d.c. is utilized otherwise.
Preferably supply C should be an uninterruptable power supply. In situations where redundant network A/B is used you can order a power distribution unit, SV542/543, which includes a selector relay and an isolation transformer. The relay selects between, for example network A and B and the transformer makes a secondary grounding of the network possible (adaption class III/class II).

Class II, class III states the network quality with respect to for example, level of disturbances, voltage variations, and so on. (according to IEC standards). Class II denotes higher quality than class III.

You can use power supply units made by other vendors for, for example sensor supply, and locate those units in an I/O cabinet. Such units must satisfy interference requirements in accordance with the relevant standards in the same test classes as the Advant OCS equipment and they must be CE-marked if equipment is going to be used within the EU and EFTA area.

Safety Switch

Close to the controller installation, there should be a safety switch enabling **total** power supply disconnection of the equipment. This means a common switch for all supply voltages, for example networks A, B and C discussed above.

The main use of the safety switch is to disconnect the power supply in a clear and safe way during work in the cabinet.

Install the safety switch in a visible place (outside any cabinetry) within 3 m of the controller installation.

a.c. Supply

Essential information includes:

- For the supply A (and redundant B) class II or class III a.c. networks can be used alternatively as a standard solution.
- For the supply C there are different options. Select a suitable power distribution unit with respect to available class II and class III networks and your requirement on redundancy. See Table 1-11.
- Single and return (class II), as well as two-phase (class III) connection, of a standard controller are possible.

d.c. Supply

Essential information includes:

- When using a d.c. supply, only battery-supplied systems with a non-grounded battery can be used for direct supply of Advant OCS. With this type of supply, the battery is grounded in the Advant OCS equipment.
- Supply from a grounded battery requires an isolating d.c./d.c. convertor.
- Supply C is always an a.c. supply, see heading above.

Protective Earth

Always provide Advant OCS cabinets supplied with 230 V a.c. with a protective earth.

Current Consumption and Fusing

Instructions for current consumption calculations are provided in Section 3.1.3, Power Supply. This section also gives dimensional rules for distribution board fusing.
For a quick guide to the power consumption to use whenever you need estimated figures is also located in this section.

Uninterrupted Power Supply

In certain applications, you must guard against brief voltage failures by using an uninterruptable supply. See Section 3.1.3, Power Supply for important considerations in doing so.

2.1.8 Process Connection

Process signal cables are connected to connection units. Connections between I/O boards and the associated connection units are made with prefabricated ribbon or multi-core cables.
The cables are available in the price list in one standard length. Other lengths up to 15 m (50 ft.) can be ordered separately. Any marshalling can be distributed accordingly.

There are certain restrictions regarding:

- Internal cable routing
- Signal earthing
- Shield earthing
- Earthing of connection units, mounting rails, cable channels
- Bounding of the marshalling racks (chassis) to the relevant cabinet housing the electronics. Pay special attention when using non-ABB cabinets.
- An open compartment is not CE-marked.

For further information:
- using ABB standard cabinets, see adequate sections in this installation chapter and the referred document below for further details if necessary.
- using non-ABB cabinets, see *Advant OCS Installation Rules User's Guide* for compliance with the EMC requirements or the general document *Interference-free Electronics Design and Applications*.

2.1.8.1 Connection Principles, Fusing and Voltage Distribution

Advant Controllers are delivered with connection units containing interference-suppression components and screw terminals for connection of process signals.
Each I/O board is normally provided with a connection unit and the signals are distributed by dividing the cables entering the cabinet and connecting the separate conductors to different I/O board's connection units. You can install delivery-adapted cross-couplings in the cabinet, making it convenient to use the connection units as the board-oriented half of the cross-coupling. As an alternative there is a series of connection units for object oriented connection. These facilitate the connection of field cables without using any marshalling or process cable split-up. An illustration and principal description is given in Section 1.7.6, Process Interface.

Examples of different solutions include standard installation of the connection unit in the terminal cabinet or installation in open compartments adjacent to the controller system. However an open compartment is not a CE-marked design.

In addition to terminal blocks for connecting signals, the connection units contain terminal blocks for supply distribution and fuses. The alternatives available in standard connection units in the form of extra terminal blocks for 0V and voltage distribution, number of fuses, and so on, vary among different types and are presented in the *S100 I/O Hardware Reference Manual*. The standards optimize function, price and space requirements, for example, a common fuse for the voltage supply to a group of eight outputs. Individual fusing of objects can be provided for particular connection units.

You can use a DIN terminal bar with connection terminal blocks and fuses for a particular application as a supplement to voltage distribution and terminal fusing in connection units.

Consider such an alternative at an early stage in the design to ensure that it is located in the cabinet to give optimum cable lengths.

Wiring is routed to different transducers and loads in the installation from the marshalling. It is important that the leads to and from a transducer for an electric signal be in the same cable. This requirement means that it is logical to distribute the voltage supply and the neutral from the controller or marshalling. The costs of cable and cable installation work can often be reduced by routing a multi-core cable to coupling boxes mounted nearby, from which cables can be connected to individual objects. More detailed voltage distribution and object fusing is possible in a coupling box than in a connection unit. The fusing used in the connection unit can then be dimensioned to protect the cable in the event of a short circuit.

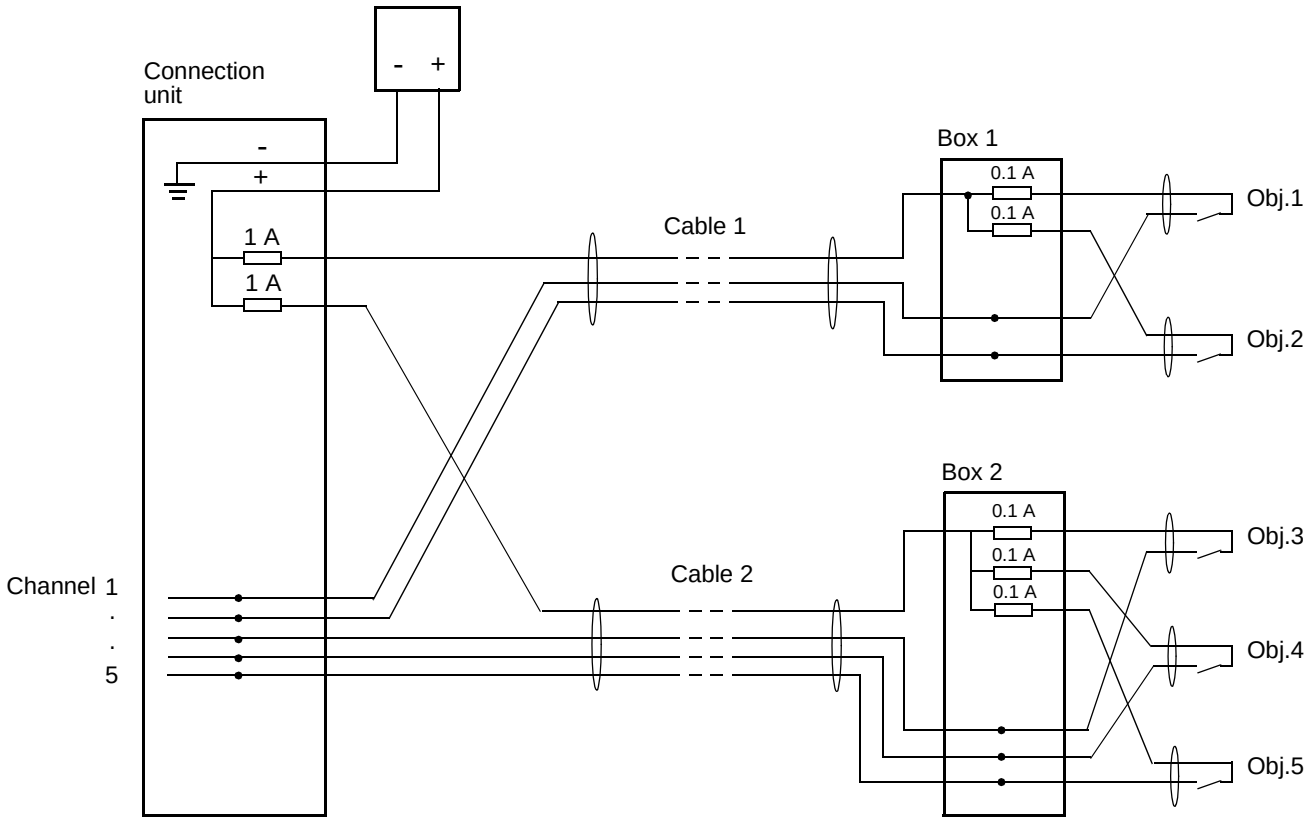

Figure 2-5. Connections with Multi-core Cable and Coupling Boxes

2.1.9 Hazardous Applications

Always combine standard process I/O boards and I/O units with barriers for ex-environment in an application-adapted way. You may use any of the available barriers on the market which meet your requirements. However, certain barrier brands provide rational connection facilities adapted to the Advant Controller 400 Series thus making these brands especially advisable.

The weighing board type DSXW 111 is an exception. It is intended for use in an explosive environment.

2.1.10 High Voltage Switch-gear Applications

Normally, Advant OCS equipment is not designed for direct connection to high-voltage switchgear. You use intermediate relays for digital input and output signals as a connecting link. For analog signals, use special measured value converters tested in accordance with Swedish standard SS 436 15 03 class 4.

2.1.11 Lightning Stroke Protection

Industrial installations and power plants are normally provided with well-integrated grounding nets installed together with the power distribution system. In installations with such grounding systems, it is not necessary to install lightning stroke protection unless you are using overhead wiring or suspended cables outdoors.

Large dispersed plants (water supply installations, refineries, and so on) can, however, have an inadequate grounding system and signal cables can be routed above ground. In such cases, lightning stroke protection must be used.

Cables outside the grounding system (even for short distances such as 10 m) always require lightning stroke protection.

For installation rules, see the general document *Interference-free Electronics Design and Applications.*

2.1.12 Weight and Mounting Dimensions

When placing a control cabinet, you must provide a number of minimum distances from the cabinet to walls and the ceiling in order to ensure satisfactory results. These minimum distances are indicated below.

When cabinets are located next to each other, you can omit from the cabinets the wall cladding on the sides in contact, except from a cabinet which contains equipment which generates any

degree of interference (for example electromagnetic relays with no interference suppression). Consider this when you are ordering the equipment.

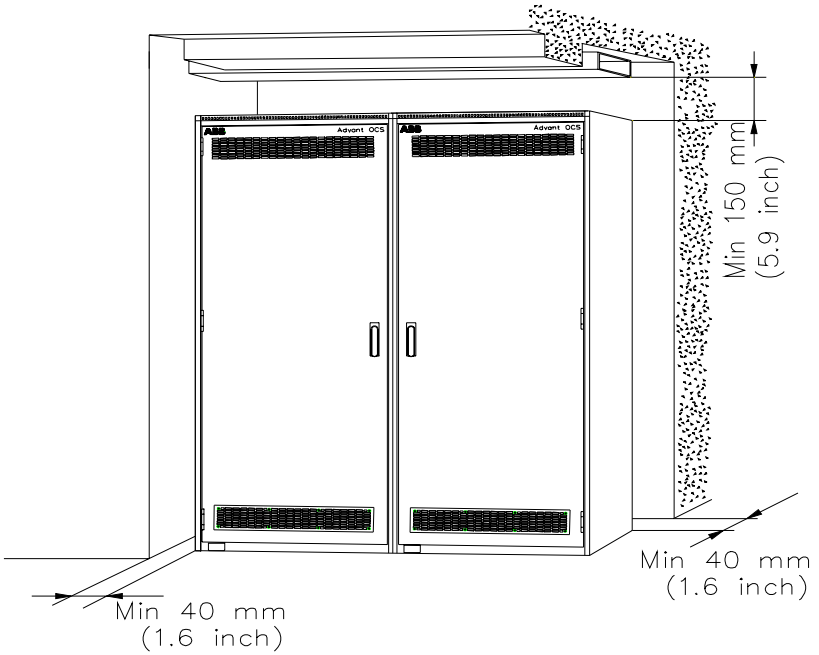

Figure 2-6. Minimum Distance to the Walls and the Ceiling

To ensure adequate ventilation, there should be a free space, 150 mm high, between the top of the cabinet and the ceiling or the underside of any beam, duct or similar structure over the cabinet. When cables enter the cabinet from above, the space available should be at least 1000 mm high to provide working space.

The distance between the rear and the sides of the cabinet and an adjacent wall shall be no less than 40 mm. This also ensures good ventilation.

If hinged frames or front doors of end cabinets are to open fully without touching adjacent walls, increase the distance as follows:

- At hinged side of hinged frame
  - cabinet RM500V1 - 300 mm (11.8")
  - cabinet RM500V2 - 350 mm (13.8").
- At hinged side of single door cabinet
  - cabinet RM500V1 - 760 mm (29.9")
  - cabinet RM500V2 - 660 mm (26.0").
- At hinged side of double door cabinet
  - cabinet RM500V1 - 382 mm (15.0").

The free space in front of the cabinet should be the width of the door plus the width of the aisle.

If a double door alternative is used, reflect the space required for any hinged frame. There must always be space left for safety reasons even with open doors or frames bent outwards.

For dimensions of the RM500 cabinet type, see Appendix B, RM500 Cabinet - Data Sheet. You can also find the estimated weight of a cabinet in that section.

2.1.13 Transportation and Storing

Cabinets are packed in a manner appropriate to the means of transport. A pallet is commonly used, so a fork-lift truck or a hand truck is usually the most suitable means of transport on site.

Cabinets are fitted with lifting eyes to facilitate transport with a crane.

NOTE

Please, observe lifting instructions enclosed with the cabinet!

Store cabinets in a dry place, protected against dust.

2.2 Setup

The goal of this section is to tell you "how to" set up the product.
Follow the sequence of activities prior to power-up described below.
It is assumed that the equipment is assembled and delivered in type RM500 cabinets. If you are using other types of cabinets, see separate documentation regarding questions such as proper levelling and how to screw cabinets together.

The equipment to be set up is ordered for and adapted to a specific application. When process I/O Series 100 is used, the delivery is normally comprised of several cabinets (single or double) which are to be placed side by side.

Apply the setup instructions with respect to the specific design!

See Section 2.2.1, Safety Regulations through Section 2.2.7, Power Supply Connection for general information, followed by individual setup descriptions for different parts of the automation system. You can find this information under the following headings, if relevant:

- **Assembly**
- **Electric Installation (including Power Supply)**
- **Functional Measures**
- **Preparation for Start-up.**

Ordinary installation drawings, terminal diagram forms and connection documents for site preparation and installation of electrical equipment also apply.

Necessary Outfit

The following kit is a minimum requirement:

- Ordinary hand tools.
- Universal instrument, for example digital multimeter.
- Test leads with 4 mm banana contacts and reducer contacts for a 2 mm test jack.
- Necessary parts of the documentation listed in Section 1.4, Related Documentation.

- Specific documentation enclosed at delivery, drawings and so on.

2.2.1 Safety Regulations

Always follow the instructions below when installing and operating an Advant Controller system to minimize the risks of injury to personnel and damage to the equipment.
Local statutory regulations, to the degree that they are stricter than the following instructions, take precedence.

2.2.1.1 Personnel and Process Safety

DANGER - CAUTION

Observe the following:

- Use only approved hoisting equipment when lifting cabinets. See lifting instructions enclosed with the cabinet.
- Never switch on the voltage supply of the cabinet during installation work.
- **Work with care when supply voltage is applied in the system. The voltage in the cabinet can cause injury and can even kill a human being.**
- Make sure that everyone working on the installation knows the location of the safety switch and the main power supply switch to the Advant Controller 450 equipment and how to use it.
- When the subsections of the process are checked and a test run has been performed, a responsible person is to check out interlocking chains, and so on.
  Inform all assembly personnel about test runs to be performed.
- Process technicians are to be present when testing and operating the process objects.
- Never press the system ENTER (initialization) button if you do not know what happens in the system with an initialization (see Section 2.4, Start-up Procedures). The command RECONFIG is equivalent to an ENTER in the CLEAR mode.
  That is a cold start takes place.
- Remember that the control system can be controlled from an engineering station connected at another node via a MasterNet. For example it can be stopped, configured and started remotely.
- Remember that an Advant Controller 450 starts automatically when voltage is applied if this is not prevented by means of the data base element START. You can also prevent start-up of an Advant Controller 450 by setting the START MODE selector in the STOP position.

2.2.1.2 Machine Safety

CAUTION

Observe the following safety rules:

- Avoid discharges of static electricity by grounding both yourself and tools before handling circuit boards and other parts of the equipment.
- Use the grounded wristband installed in the cabinet when handling parts of the system.
- Handle the circuit boards carefully, particularly those which contain MOS components which can be damaged by static electricity discharges. Note the warning label on the circuit boards.
- Use, as far as possible, the grounded wristband when handling boards not stored in envelopes of conductive plastic. This gives optimum protection against static electricity discharges.
- Always store circuit boards in envelopes of conductive plastic when not installed in the system rack.
- Always switch off the voltage before extracting a board which cannot be exchanged while under voltage. See Chapter 5, Maintenance. Wait a sufficient time for the capacitors to discharge.
- Switch off voltage to the system and withdraw all boards at least 20 mm before electrical welding is performed near the controller system.
- A warning label is fixed in the system to draw attention to possible damage by ESD (Electro Static Discharge).

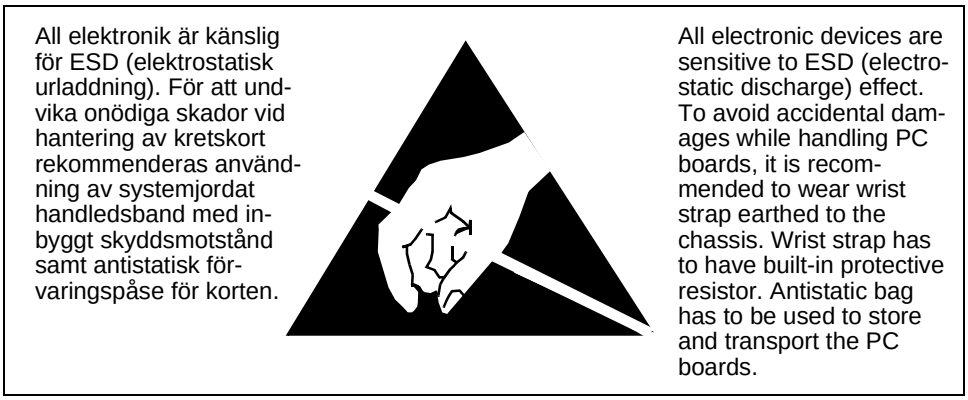

Figure 2-7. Warning Label regarding ESD

2.2.2 Unpacking and Storing

If the packaging is opened for a delivery check, reseal it if the cabinets are not to be installed immediately. Store cabinets in a dry place, protected again dust.

Avoid fixing labels on painted surfaces. If these remain in place too long, the surface can be affected.

Use care when unloading and transporting cabinets. A fork-lift truck is usually the most suitable means of transport.

Cabinets are fitted with lifting eye bolts to facilitate transport with a crane.

NOTE

Please, observe lifting instructions enclosed with the cabinet!

Temporary Installation of Heating Element

If a cabinet is provided with a heating element, activate it as soon as possible after the cabinet is unpacked to prevent corrosion.

Connect the mains supply a.c. (phase, return and protective earth) directly to the terminal blocks of the element unit.

Make the connection **temporarily**. See the delivery documentation for information on element location and terminals to be used.
When the cabinet is finally installed, supply the element according to the information given in Section 2.2.7, Power Supply Connection.

2.2.3 Location

The cabinet is to stand on a stable floor, deck or supporting structure, free from vibrations, and is to be screwed to the surface. Minimum distances to walls and ceiling are listed in the Figure 2-6.

Access to the rear of the cabinet is not necessary.

If required, you can remove the side plates on the sides in contact when two or more cabinets related to one controller with I/O are installed next to each other. The width of the cabinets is reduced by 20 mm for each end panel removed. The side plates should remain in place, as protection, on any cabinet which generates any degree of interference.

2.2.4 Arrange the Cabinets

The floor should be level and well suited for arranging (Swedish building standard-AMA tolerance 3B or class 2), so that a number of cabinets can be bolted together without any additional work being required.

If the floor is not sufficiently level, the cabinet base may be askew, making it difficult to open or close doors.

Information about how to screw the cabinets together and fixing them to the floor is given in Appendix B, RM500 Cabinet - Data Sheet.

2.2.5 Grounding

This section shows you **where** to ground in an Advant Controller cabinet. If necessary, it also shows you **how** to ground.

You should be aware of the common *Advant OCS Installation Rules*, which establish the principles of grounding and answer the questions of **when** a piece of equipment, a circuit or a cable shield should be grounded and **why** it should be grounded. It also gives alternative solutions adapted to specific plant requirements.

2.2.5.1 General

A RM500 cabinet forms a stable ground plane for all equipment accommodated.

The signal processing electronics in the controller, as well as all interference suppression for external signals, are normally directly grounded to chassis and plant earth.

2.2.5.2 Protective Earth

The mains distribution normally includes a protected earth (PE) wire. Connect this to the PE terminal block on the primary Power Switch Unit or the Mains Net Filter, if included. (See the circuit diagram enclosed at delivery.)

You are directed to use cable lug connectors when connecting to any earth screw.

2.2.5.3 Earth Line

Ground the cabinet with a copper lead (≥ 35 mm) to the plant earth line.

Use the left front M10 marked "Protection Ground" of the four screws placed in the corner of the cabinet floor. You are directed to use a cable lug connector.

One common connection from a row of cabinets is sufficient. The cabinets should be well bounded together.

2.2.5.4 Grounding of Process Cable Shields

General

Advant OCS or rather the application itself put some limited requirement on cable shielding. Only a few types of process signals must be shielded and treated in a special way in the controller cabinet. In the continued description of CE-marked and not CE-marked controller design these cables are denoted **category A** and they include:

- Low level analog input signals
  - Accuracy requirement shall be greater or equal to 12 bits
  - Pt 100 and Thermocouple.
- High-frequency pulse transmitter signals.

Normally a single shield is used and it is grounded in the controller end of the cable. Sometimes the application require a local grounding of the cable shield close to the transducer. Specific rules apply then.

By different reasons other field cables may be shielded too. For example following a company/plant standard. There is no requirement from the controller viewpoint. These field cables are denoted **category B**.

Unshielded process I/O cables can be mixed with shielded process I/O cables.

Common to all cabinet designs is the horizontal mounting bar at the left hand side of the cabinet inside, close to the bottom of the cabinet. They can be used to mechanically anchoring all types of field cables, shielded and unshielded, when entering the cabinet.

CE-marked Design

Shields of **category A** cables which are to be directly grounded in the cabinet must be grounded to the cabinet chassis, cable ducts or connection units, according to Figure 2-8. Use a short lead (<50 mm) and thread-cutting screws.

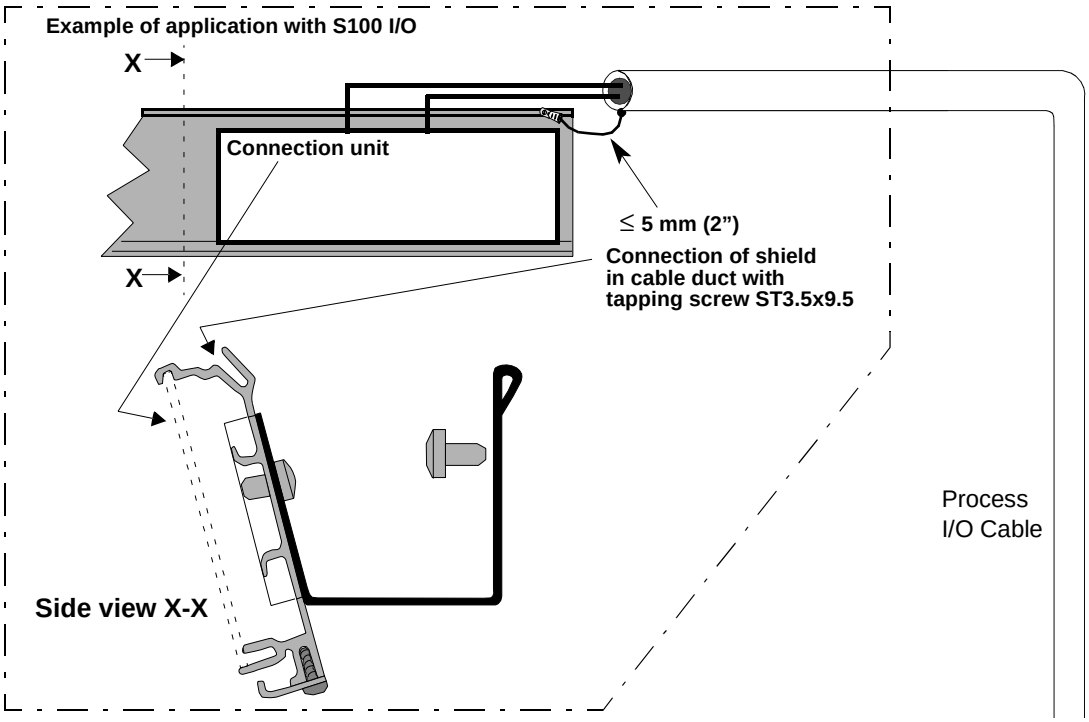

Figure 2-8. Handling of Process I/O Cable Shields in a CE-marked Cabinet

If there is a requirement of local grounding of a cable shield for, for example, a thermocouple application, cable with double shield should be used. The inner shield is grounded locally at the transducer while the outer shield is grounded according to Figure 2-8.

Shielded cables of the category A which are grounded locally at the transducer are alternatively to be connected via a capacitive decoupling device, located in the bottom of the cabinet. That is similar solution to that used for certain communication cables. See Section 2.2.5.5, Grounding of Communication Cable Shields.

Shields of **category B** cables can be handled in the same way as category A cables.

Not CE-marked Design

If a conventional cabinet is used the attachment of the cable shield and anchoring of the cable is co-ordinated by using the horizontal mounting bar, see Figure 2-9. The shield of a **category A** cable must furthermore be run all the way up to the relevant connection unit. A suitable point of grounding **in the connection unit** is shown in Figure 2-8. Use a short lead ≤ 50 mm and thread-cutting screws.

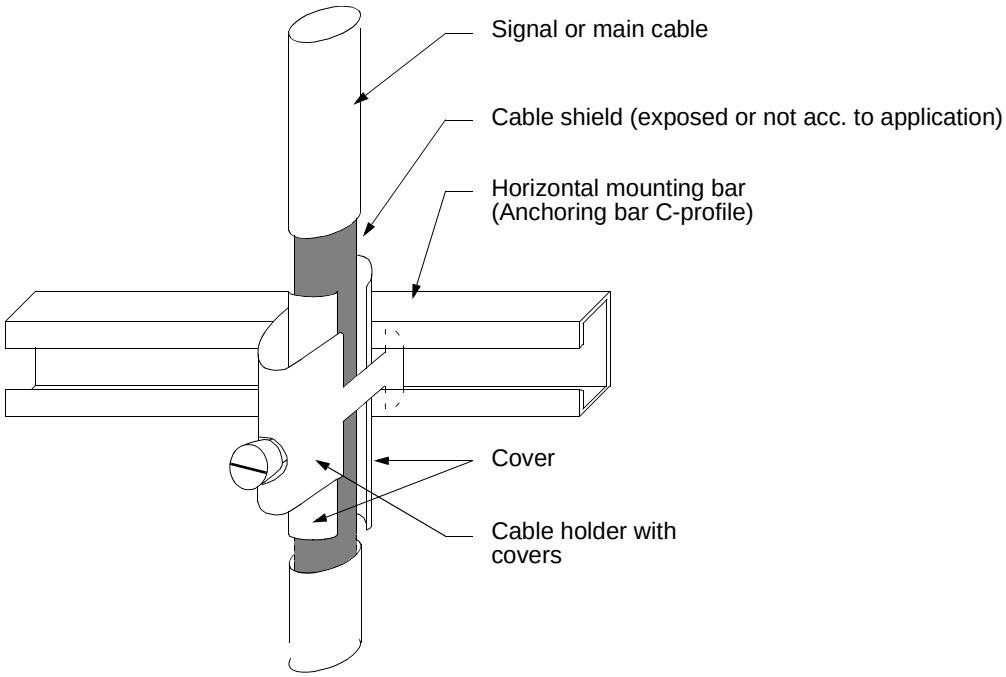

Figure 2-9. Handling of Cable Shields in a not CE-marked Cabinet

Shielded cables of the category A which are grounded locally at the transducer shall be left ungrounded in a cabinet which is not CE-marked.

After anchoring and grounding of a **category B** cable shield in the horizontal mounting bar you are free to cut the shield wherever it is most practical.

2.2.5.5 Grounding of Communication Cable Shields

General

Communication cables shall be routed directly to the actual connection unit, modem or communication module in a subrack. Never open up a cable shield when entering the cabinet. The grounding of the shield to the chassis, directly or via a capacitor is normally determined by the type of communication. You must reflect the whole installation of the communication bus to comply with a main rule: A bus communication cable shield must be directly grounded but only in one end of the bus. That is in the cabinet where the first/last connected Advant Controller (or other node) is located.

There is a supplement to the installation information given in separate communication user's guides.

CE-marked Design

I addition to the general instruction found above, further interference suppression of the cable shield is made at the enclosure port by individual methods adapted to the different types of communication. The schematic principles of direct grounding and h.f. grounding by a capacitor are shown in Figure 2-10.

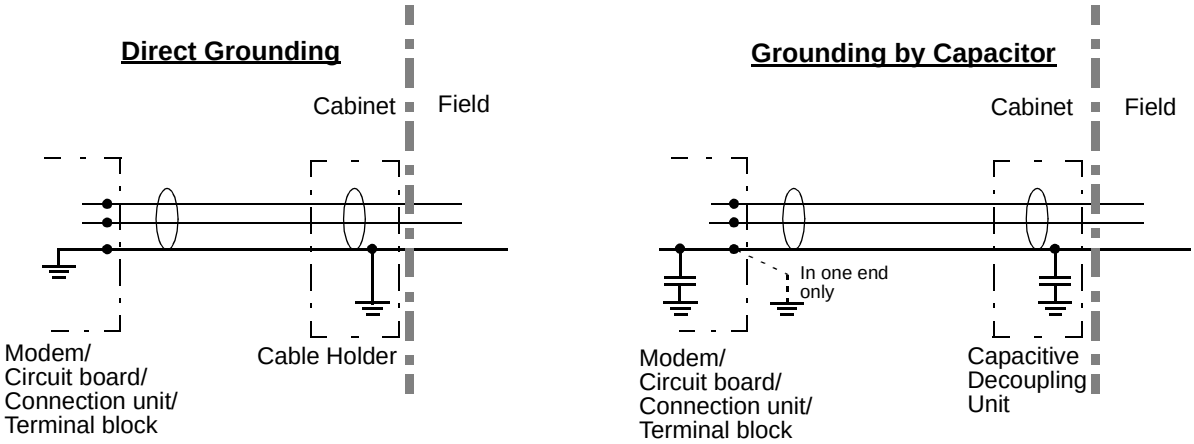

Figure 2-10. Principles of Grounding of Communication Cable Shields in a CE-marked Design

At direct grounding of the communication cable shield, the illustration in Figure 2-9 is applicable.

The grounding via a capacitor is based on a Capacitive Decoupling Unit, which is mounted on the horizontal mounting bar. The cable then passes the cabinet bottom unstripped.
See Figure 2-11.

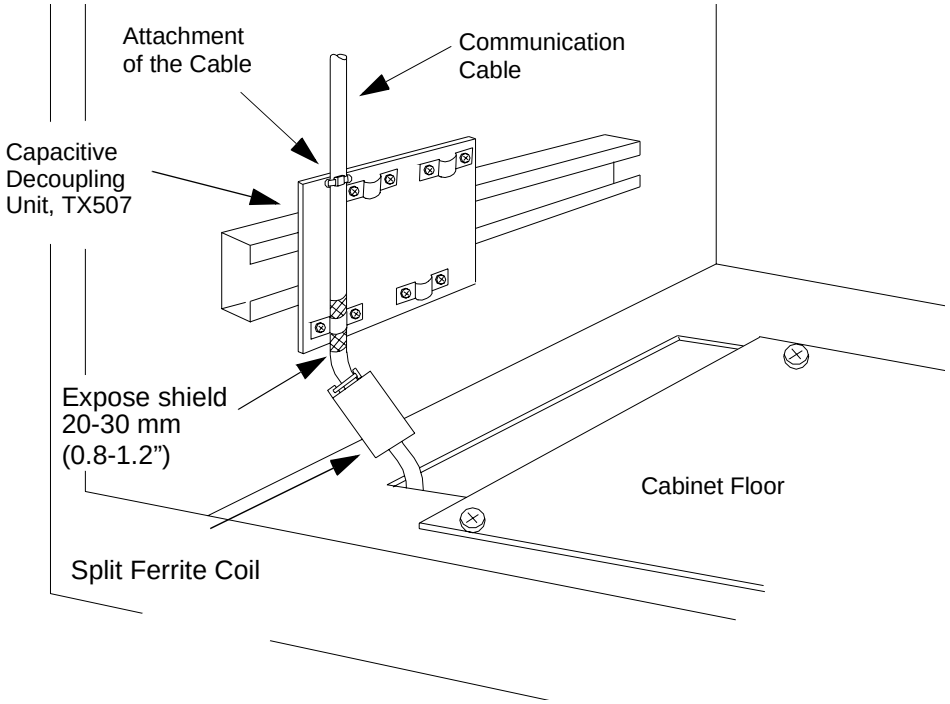

Figure 2-11. Communication Cable Shield Grounded by Capacitor and Ferrite Coil

Each unit takes up to four communication cables and it also provides the mechanical anchoring of the cable. Two units can be mounted side by side or, if necessary, on top of each other. Certain spacers are used then. This imply a maximum of 4 units on a mounting bar (16 buses).

A split ferrite core should be used on each communication cable. They should be mounted at the cabinet entry, see Figure 2-11, and have a series impedance of at least 100 ohms in the frequency range 50-300 MHz. The application of method with respect to communication type is given in Table 2-1.

Table 2-1. Methods of Handling Communication Cable Shields

Type of Communication	Grounding of Shield Directly	Grounding of Shield via Capacitor
Advant Fieldbus 100, Coaxial	--	Yes
Advant Fieldbus 100, Twisted pair	--	Yes
MasterFieldbus, Long Distance Bus	--	Yes
MasterFieldbus, Short Distance Bus	Yes (in both ends!)	--
MasterBus 300 (300E), GCOM, drop cable	Yes	--
RCOM, EXCOM, MVI	Yes	--

Table 2-1. Methods of Handling Communication Cable Shields (Continued)

Type of Communication	Grounding of Shield Directly	Grounding of Shield via Capacitor
LONWORKS Communication Twisted pair	Yes, on one end	Yes
PROFIBUS-DP		Yes
V24/RS-232-C, for example for a printer	Yes	--
Bus Extension to S100 I/O	Refer to Section 2.2.9, Bus Extension to S100 I/O	

Not CE-marked Design

The description given under the heading **General** is adequate. The cable is mechanically anchored to the horizontal mounting bar close to the bottom of the cabinet. Leave the cable unstripped. Use a cable clamp to press the cable against the bar or adjacent cable if several cables are pressed together.

2.2.5.6 Grounding of "Internal" System Cable Shields, Connection Unit -- I/O Board

General

Use shielded cables to join distributed (> 3 m) process connection units and I/O boards in a subrack. Note that the internal cable must be routed separated from other cables.

Ground the shield **in both ends**. Use sheet cable lugs and self-tapping screws ST3.5x9.5 (B6x9.5). See Figure 2-12.

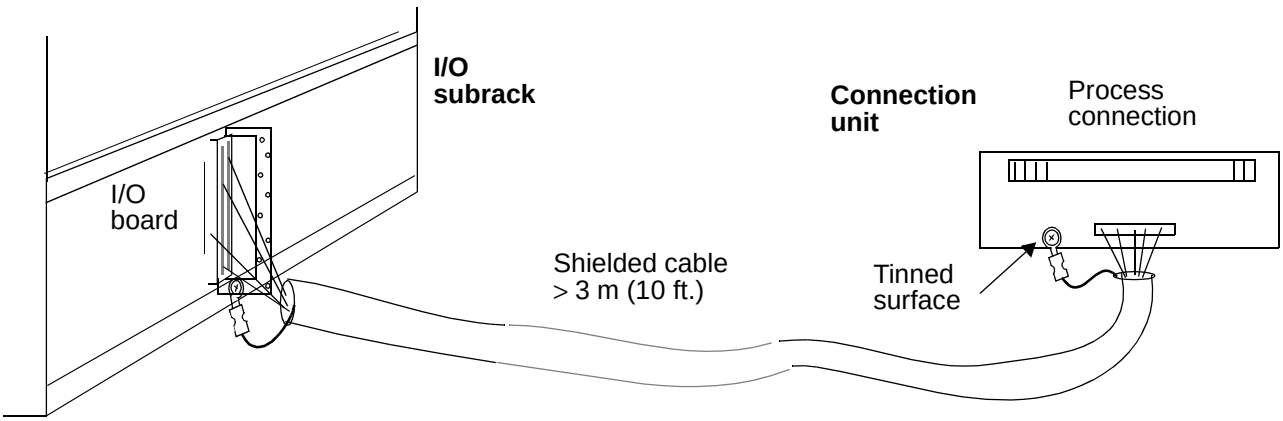

Figure 2-12. Grounding of Cable Shield, Connection Unit - I/O Board

CE-marked Design

A EMC-proof cabinet must be used for the I/O subrack and the connection units as well.

The cable shield shall be grounded in both ends according to Figure 2-12.

Not CE-marked Design

The description given under the heading **General** is adequate. The cable is mechanically anchored to the horizontal mounting bar close to the bottom of the cabinet. Leave the cable unstripped.

2.2.5.7 Grounding of Process Signals

There are three applications of signal grounding directly to the chassis. (High-frequency grounding by capacitors is always provided and not discussed in this context.)

1. Signals are automatically grounded to the chassis by the connection unit. This quality is determined by the selection of I/O unit or connection unit. Some board types require grounded signals while others can be applied to non-grounded signals (and grounded). Please see the connection unit documentation on a case-by-case basis.
2. Signals can be commonly grounded by grounding the reference 0V of centralized power supply for loads and sensing. Such a power supply system must be grounded to the same earth line as the Advant OCS.
   If the power supply unit is placed in the controller or I/O cabinet, 0V is grounded to the protective earth screw.
   Local grounding of loads and sensors is then impossible!
3. Individual grounding of a signal in the controller cabinet is possible (if it is applicable with respect to board type and connection unit type selected).
   The 0 V signal connection at the connection unit is reconnected and grounded to the mounting rail. Lead length is not critical.
   Use a self-tapping screw. See Figure 2-13.
   Such an application requires that the signal not be grounded otherwise, for example, not locally grounded at load/sensor or not grounded via a power supply grounding.

You must follow the main rule: Do not ground a signal at different points in the plant.

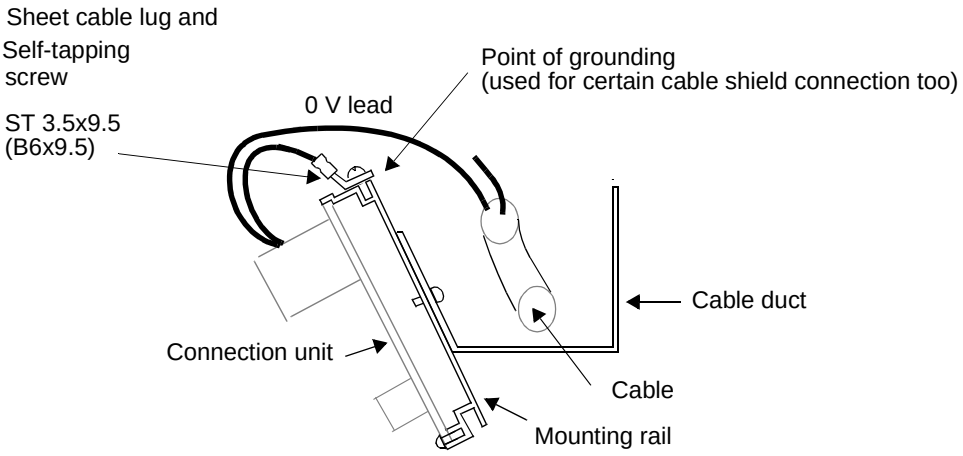

Figure 2-13. Individual Grounding of Process Signal

2.2.5.8 Grounding of Additional Equipment

Treat additional power supply units of different types, aimed at load/sensor supply and modems, and so on erected in the controller or I/O cabinet, in the following way with respect to grounding:

- Connect the apparatus chassis (or PE terminal) to the protective ground via one of the power distribution sockets on the power switch unit or directly to the cabinet chassis.
- Consider application-adapted grounding of power supply 0 V. If desirable, connect the 0 V terminal to the chassis. It is preferable that you use the protective earth screw.

2.2.5.9 Spare Conductors

Spares in field cables are to be grounded within a cabinet, in case of a CE-marked design.

2.2.6 Cable Routing in Cabinets

Cables are practically routed on either side of the cabinet depending on the final destination. The physical item destination for an actual apparatus, and thereby the connection point, appears in the circuit diagrams and other installation drawings enclosed at delivery.

The assigned space for cables that are entered in the floor opening is shown in Figure 2-14.

For your information, the space for the factory assembled cables is also indicated in Figure 2-14. Regard the latter cables and leads as sensitive to disturbances and keep them away from cables coming from the plant. You will encounter these areas only when the system is enlarged by additional equipment, for example, a circuit board and connection unit.

Plant cable routing within cabinets holding object oriented connection units (OOCU) diverge somewhat. This is illustrated in Figure 2-15.

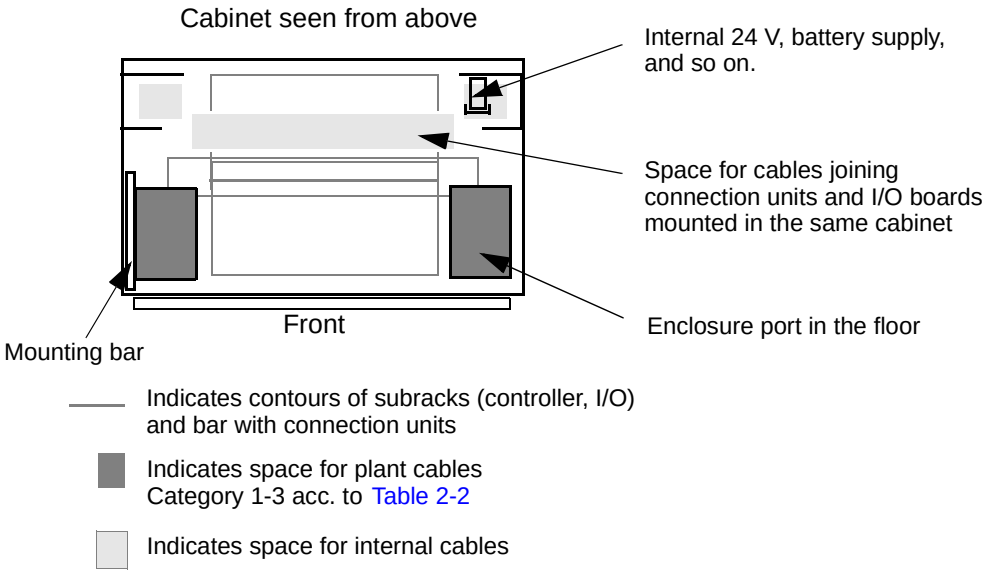

Figure 2-14. Assigned Space for Cables in a Cabinet

There are some restrictions in mixing cables within a cabinet due to the risk of interference. To describe the simple rules applicable at site installation, cables are divided in categories. See Table 2-2 and the following rules:

- Within a category, you can mix cables arbitrarily.
- Keep the distance between cables belonging to different categories ≥50 mm.
- "Cabinet internal" couplings have their own defined spaces for routing. Always keep the distance to other cables ≥50 mm.

Table 2-2. Cable Categories in a Cabinet

Cable /Application	Category
Power supply a.c. or d.c.	1
Process I/O, shielded and unshielded cables	2
Communication	2
Clock sync. STAL alarm, and so on	2
Distributed Connection unit	3
Bus extension to S100 I/O (1)	4

(1) Bus extension for S100 I/O is normally routed between cabinets in a special way, as illustrated in Section 2.2.9, Bus Extension to S100 I/O.

Route cables in horizontal cable ducts when applicable.

Fix cables with cable straps.

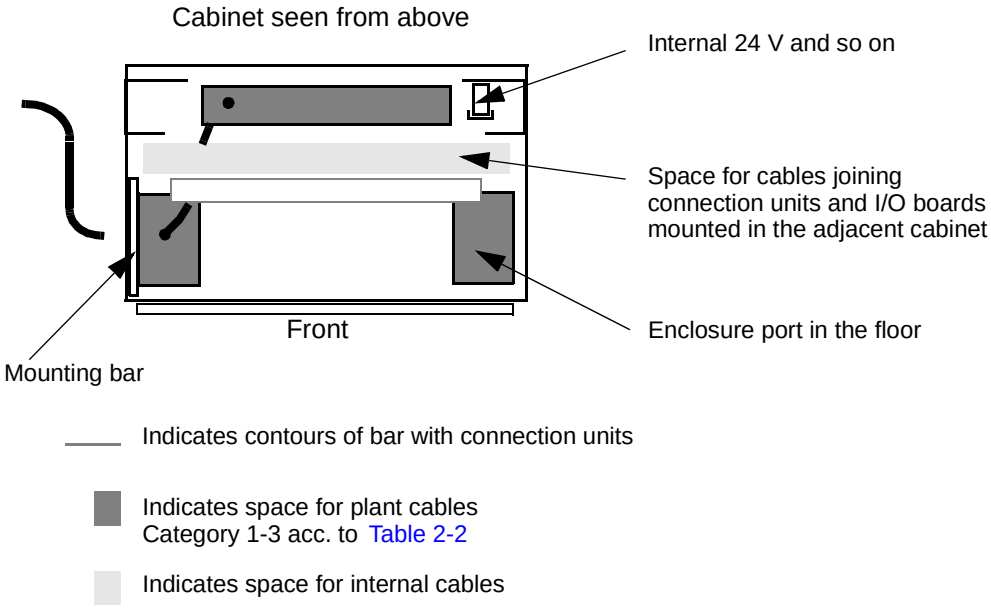

Figure 2-15. Plant Cable Routing in OOCU Cabinet

2.2.7 Power Supply Connection

2.2.7.1 General

Cabinets erected side by side, including a controller and I/O configuration, are regarded as a unit which is joined to the power supply network at one single connecting point, a centralized power switch unit. The switch unit is normally located in the controller cabinet.

The power supply is distributed to the I/O cabinets according to application. The power supply units in I/O cabinets are connected to the switch unit via ready-made cables and plug-in contacts.

In certain applications using object oriented connection units and distributed S100 I/O cabinets, divergences from the main principle illustrated in Figure 2-16 below exist. Please, see Figure 2-2 and Figure 2-3.

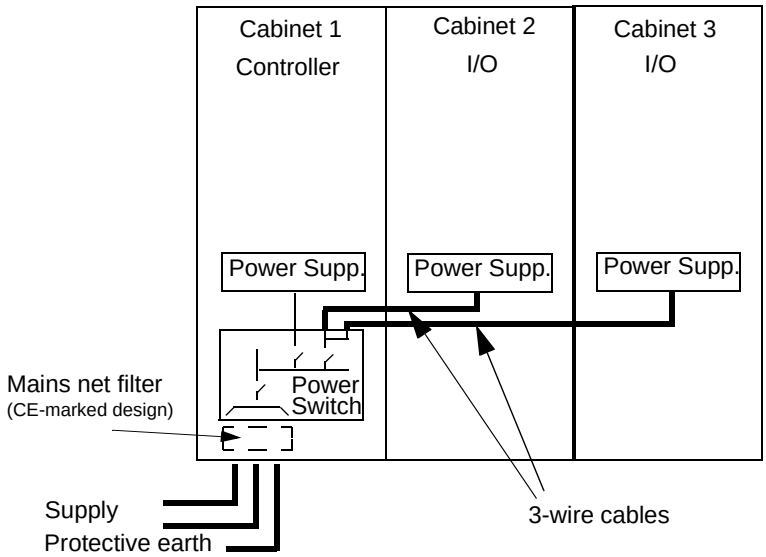

Figure 2-16. Main Principle of Power Supply Connection and Distribution

2.2.7.2 Installation

General

Ordering documents show which power supply alternative is applied.
An a.c., d.c., redundant or non-redundant supply is connected to the controller in the same way, in principle. A terminal diagram form enclosed at delivery shows the relevant physical item designations and connection points in the cabinet. You will also find the denominations supply A, B and C applicable.

A summary of the main requirements of the networks A, B and C are given in Section 2.1.7, Power Supply and Fusing.

The installation work to be done, supported by the terminal diagram form (circuit diagram), is:

- Connect network A
- Connect network B (if redundancy)
- Connect network C
- Connect the power supply units located in I/O cabinets. Use the ready-made cables and plug-in contacts. They are marked with the destination item designations.

CE-marked Design

Protection against line conducted radio emission is obtained by means of a special filter placed in the bottom part of the cabinet on the incoming supply. One filter for each supply is utilized.

The cable length between the entrance of the cabinet and the net filter should be as short as possible and mounted inside a protective screen. After connection to the net filter(s) the protective shield plate should be remounted.

Not CE-marked Design

No additional information than that given under the heading General apply.

2.2.7.3 Heating Element

If a heating element is included in the cabinet, connect it appropriately with respect to external safety switches. Do not disconnect it by the cabinet power switch unit.

2.2.7.4 Preparation for Start-up

Check that the circuit breakers on the power switch units are switched off.

Reflect the relevance of:

- Power switch in the cabinet housing the controller subrack
- Separate power switch in any cabinet housing S100 I/O subrack with object oriented connection units (OOCU)
- Separate power switch in physically distributed cluster of S100 I/O subrack.

2.2.8 Controller

Assembly

All equipment included in the controller is factory assembled. Cabinet arrangement and similar questions are dealt with in the general setup instructions above.

Electric Installation

Apart from the process I/O connections and communication connections, which are treated separately, there is little electric installation. Grounding of the cabinet, equipment, cable shields, and power supply connection are covered in the general setup instructions above. In addition to that, make the following connections of functions when appropriate:

- Run/Alarm relay
- External clock synchronization
- Additional supervisory inputs.

The location of the connections within the cabinet are specified in the terminal diagram form enclosed at delivery.

Run/Alarm Relay

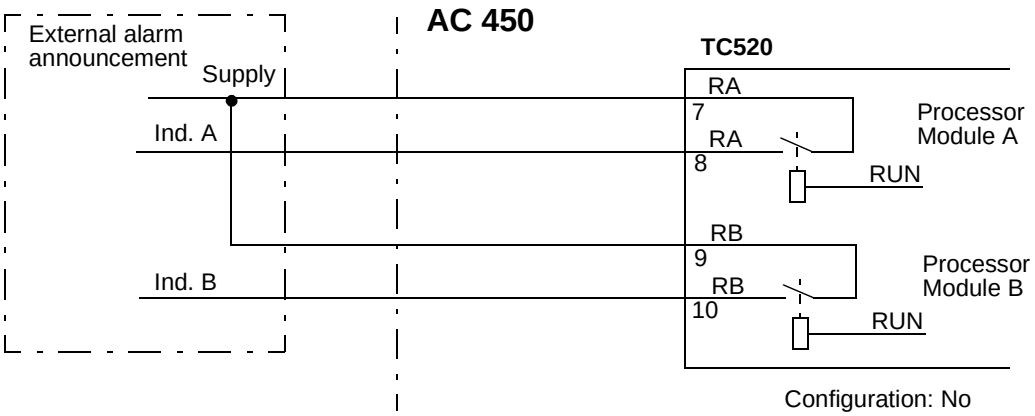

Figure 2-17. Connection of Run /Alarm Relay

External Clock Synchronization

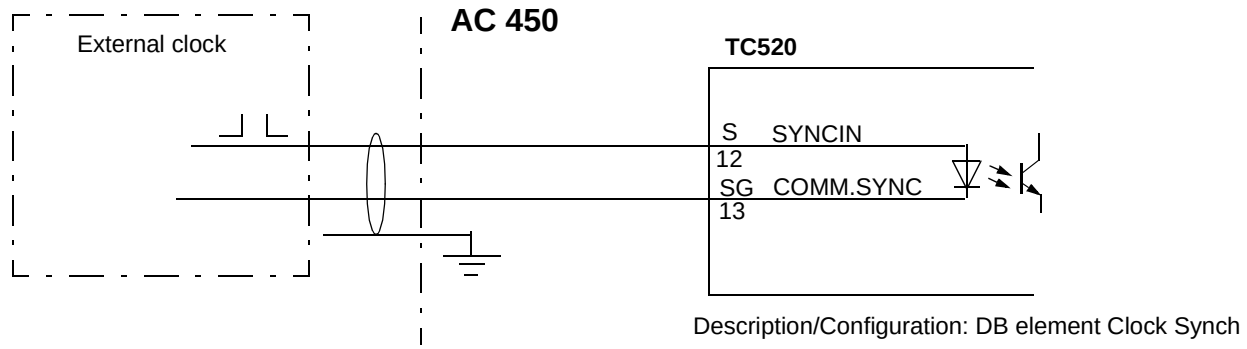

Figure 2-18. Connection of External Clock Synchronization

Additional Supervisory Inputs

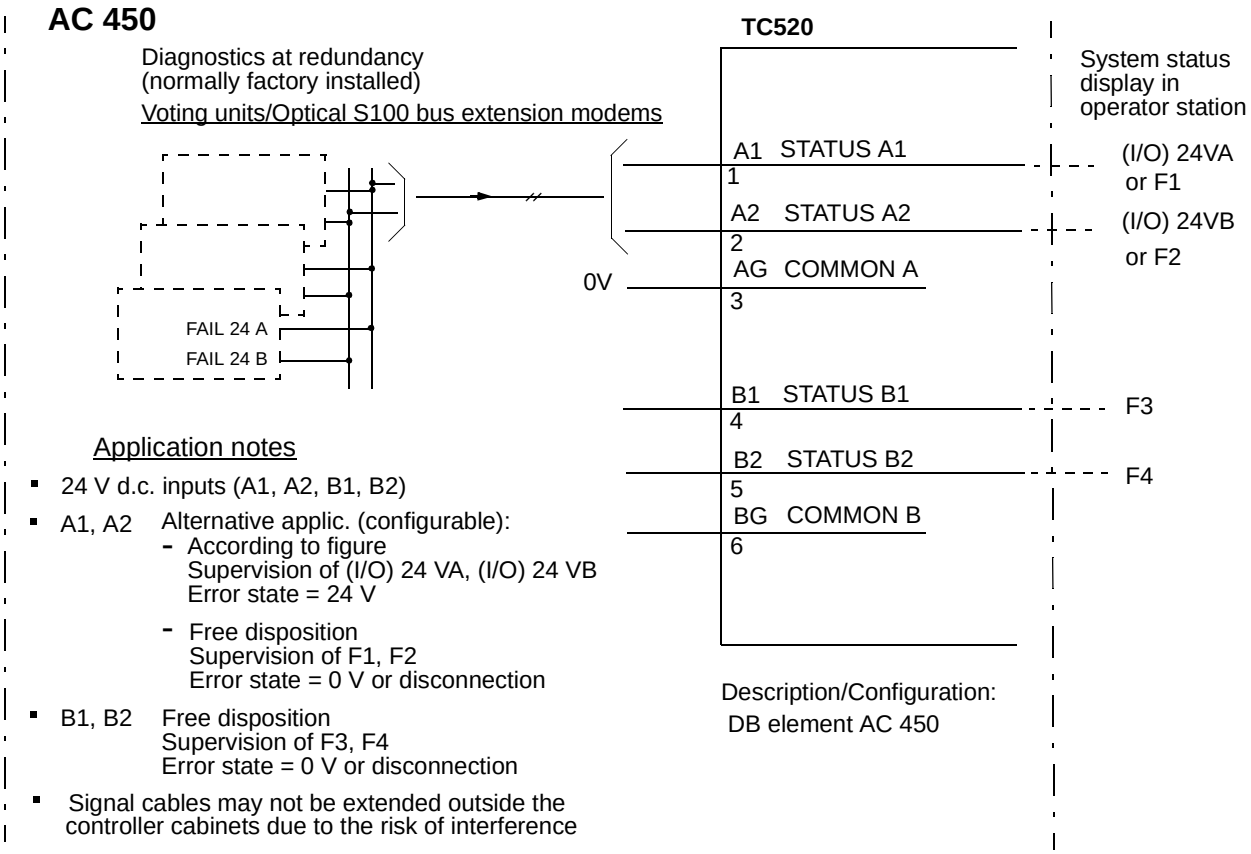

Figure 2-19. Connection of Additional Supervisory Inputs

The status information is available:

- On the Advant Controller 450 data base element for use in any application program.
- On the Advant Controller system status display presented on central operator station display screen.

Configuration, that is, defining the texts to be presented in the status displays, is performed in the AC 450 data base element.

Functional Measures

- Adjust all included communication modules designated CS513 (MasterBus 300, MasterBus 300E) with respect to the actual configuration before a power switch on. You are directed to set the following by jumpering:
  - Network number
  - Node number
  - Slave number
  - Protocol type.

  For instructions, see the manual *MasterNet User's Guide*.
  The data base elements in Advant Controller holding the corresponding data are automatically updated at power-on/initialization.
- Set the start mode selector on the CPU module front (PM511) in the CLEAR position.

Preparation for Start-up

Please see the general checklists in Section 2.2.15, Checklists.

Leave the battery for memory backup disconnected until the mains supply is switched on and the application configuration is started. Otherwise, it will be discharged in a few hours.

2.2.9 Bus Extension to S100 I/O

You can use the following basic information when you install an electrical bus extension. How to install an optical bus extension is described in *S100 I/O Hardware Reference Manual*.

Assembly

The different parts of the bus extension are mainly factory assembled. These include:

- Bus master module which is included in PM511 in controller subrack
- Slave boards DSBC 174 or DSBC 176, located in each I/O subrack (two per I/O subrack in case of S100 I/O bus extension redundancy, only valid for DSBC 174)
- Ribbon cables connecting subracks within a cabinet.

You are supposed to make the interconnection of the bus extension between cabinets. Cabinets should be arranged side by side in a designated order. Ribbon cables with adapted lengths are enclosed at delivery. The cables are marked with item designation at the connectors.

Use these cables!
It is important not to exceed the maximum bus length 12 m, that is, the total length of the cables used may not exceed 12 m.

Check that a plug-in termination unit DSTC 176 is located only on the last bus extender slave board in the chain. See Figure 2-20.

Electric Installation

Make use of the enclosed ribbon cables to interconnect the bus between the cabinets. Such a cable is connected at one end and temporarily wound up and hung up on the wall side.

Figure 2-20 shows an example of a non-redundant installation. The actual ribbon cables are illustrated with a thick line.

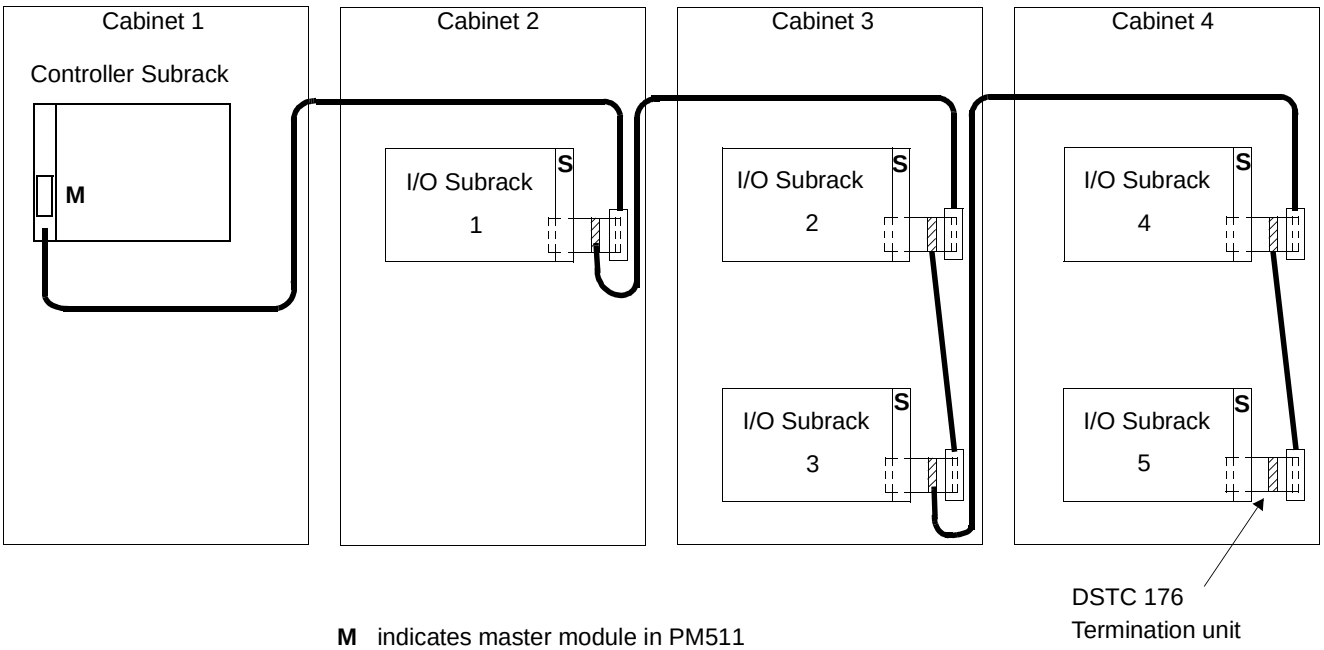

M indicates master module in PM511
Connection on module front

S indicates slave module DSBC 174 or DSBC 176
Connection from behind

Figure 2-20. Example of Bus Extension

Since no intermediate side walls or plates are used on a cabinet within a row, draw the ribbon cables directly between the cabinets.

The ribbon cables are sensitive to interference. Locate them at least 100 mm away from other cables and wires in the cabinet.

Ensure that there is no tension in the wiring, especially with respect to possibly swinging the hinged subframe for I/O subracks.

Carefully fix the ribbon cables to fixing bars or the like with the help of cable straps.

If for some reason the cabinets are not arranged side by side then the bus extension cable must be routed separated from other cables (>100 mm). A CE-marked design put the requirement that the extension cable shield is additionally grounded by the cable clamp in the cabinet floor.

Functional Measures

Address Jumpering (DSBC 174, DSBC 176)

The jumpering group S1 defines the boards I/O address. Instructions on how to set a bus extender board address are given in the *S100 I/O Hardware Reference Manual.*

Functional Jumpering

All jumpers in jumper group S3 on DSBC 174 are open when the bus extender is used in systems based on CPU PM511 (and closed when used in systems based on CPU PM510).

Preparation for Start-up

Please see the general checklist in Section 2.2.15, Checklists.

2.2.10 S100 I/O

Assembly

Circuit boards and connection units are normally factory assembled. For information regarding the location of equipment, see the actual delivery documentation. Assembly drawings, for example, also give the cross-reference between the following structures:

- Physical location of circuit boards and connection units
- Functional item designation of circuit boards and signal channels
- Board address.

The functional item designation, for example, AI1 and the board hexadecimal address, H'20 are hard related to each other and supported by the configuration tool when creating the data base. (Normally, this relation is never changed.) However, the relation to the physical location is determined when the equipment to be delivered is designed. Initially, standard location is followed, see Section 2.1.4, Standard Layout and Disposition of Cabinets. Customized layout is possible whenever applicable.

Reorganization of boards and connection units is "theoretically" possible. I/O board addresses are not hard related to physical location. The board itself is carrying the address. The question is, are there sufficient cable lengths (board-connection unit) to do the work?
A reorganization also calls for changing the documentation of the equipment.

Electric Installation

Distributed Connection Units

Distributed (3 m - 15 m) connection units are joined to the I/O boards by adapted shielded cables with plug-in connectors. The following instructions apply:

- Outside the I/O cabinet, route the cables separately from other cables.
  - 100 mm distance in general to other cables
  - 300 mm distance to cables conducting power supply >250 V a.c.
- Cable routing in cabinets, see Section 2.2.6, Cable Routing in Cabinets.
- Grounding of cable shields, see Section 2.2.5, Grounding.

Process Signals

Process signals are connected to the connection units according to site installation drawings supported by:

- Assembly drawings enclosed at delivery
- Terminal diagram forms enclosed at delivery
- Connection examples in *S100 I/O Hardware Reference Manual*.

The following instructions apply:

- Cable routing in cabinets, see Section 2.2.6, Cable Routing in Cabinets.
- Grounding of cable shields, see Section 2.2.5, Grounding.
- Grounding of process signals, see Section 2.2.5, Grounding.

Regarding cable selection and external cable routing, see general information in *Interference-Free Electronics Design and Applications*.
A carefully accomplished electric installation is the basis of future interference-free operation.

Functional Measures

Address Jumpering

All circuit boards are adequately jumpered with respect to address at the factory.
If you need them, you can find instructions on how to set an I/O board address in the *S100 I/O Hardware Reference Manual.*

Functional Jumpering

There are some board types that require jumpering to determine an application function, for example, selection of current/voltage signal, mains frequency, grounding, and so on. Functional jumpering applies to the board types and connection unit types listed in Table 2-3. Please check the relevance for your application and follow further instructions for the specific board type/connection unit type given in the *S100 I/O Hardware Reference Manual*.

Table 2-3. Functional Jumpering

Board/Connection Unit	Function
DSAI 146, 155A	Mains frequency
DSTA 001, 001B, 002, 002B	Current/voltage
DSTA 131, 133, 135	Current/voltage, grounded/floated supply
DSTA 155, 155P, 156, 156B	Grounding
DSAO 110	Current/voltage, 10/20 mA, gain factor
DSAO 120A	Current/voltage
DSAO 130	Current/voltage, 10/20 mA
DSDP 140A	Filter time, function mode
DSDP 150	Function mode, voltage level
DSDP 170	Interrupt level, measuring interval source and time, filter time for inputs
DSTX 170	Input signal level, grounding
DSDC 111	References
DSTX 110	External/internal supply
DSTY 101	Signal range

Readjustment

AO boards are factory adjusted for voltage output signals. If current signal is desired/jumpered, you must readjust for maximum accuracy. Please follow the instructions found in Section 5.5.12, Channel Adjustment on AO Board.

Preparation for Start-up

Check of the External Wiring

Judge the level of workmanship case by case. The result determines the need to thoroughly check all connections before the system is powered up.
You can, of course, check with a buzzer or similar device that the external wiring to the process equipment is correct and that all conductors are intact.
Without activating the control equipment, you can also check that transducers and actuators (including all process wiring) function correctly. This makes it necessary to connect voltage to these units and develop suitable checking methods, which are time-consuming activities.

An alternative method is to make an integrated check of the process equipment and wiring and the corresponding controller function, which can be accomplished with a circuit-by-circuit procedure. Preferably, the controller is loaded with application data base. The data base is then used as one checkpoint. Status/values can be read and control signals to process objects can be simulated by an engineering station. When an operator station is included in the system, it is

most effective to maintain the check from the automatically generated process I/O object displays. The application data base must be loaded.

CAUTION

When you use a somewhat tougher method, be aware of the risk of "accidents." Short-circuiting and over-voltage can damage a limited part of the equipment, for example, a process I/O board.

2.2.11 S800 I/O and S400 I/O

S800 I/O modules and S400 I/O units are normally arranged in suitable cabinetry. The necessary communication modules and modems are assembled in the controller cabinet. For information regarding the location of this equipment, see the actual delivery documentation. For other information, including all questions of installation, see the separate documentation:

- For S800 I/O the manuals:
  - *Advant Fieldbus 100, User's Guide*.
  - *S800 I/O, User's Guide.*
- For S400 I/O the manual:
  - *MasterFieldbus and S400 I/O, User's Guide.*

Preparation for Start-up

The general information given for a check of external wiring in Section 2.2.10, S100 I/O apply.

2.2.12 Peripheral Units

Power Supply

If you do not use a modem when communicating with a printer or a video terminal, you must take an a.c. voltage supply with a protected earth (PE) from the Advant Controller cabinet, it is not acceptable to use the closest or otherwise most convenient supply receptacle.

Make the connection as shown in Figure 2-21. The significant aspect is that the peripheral unit should be grounded in the controller protective earth.

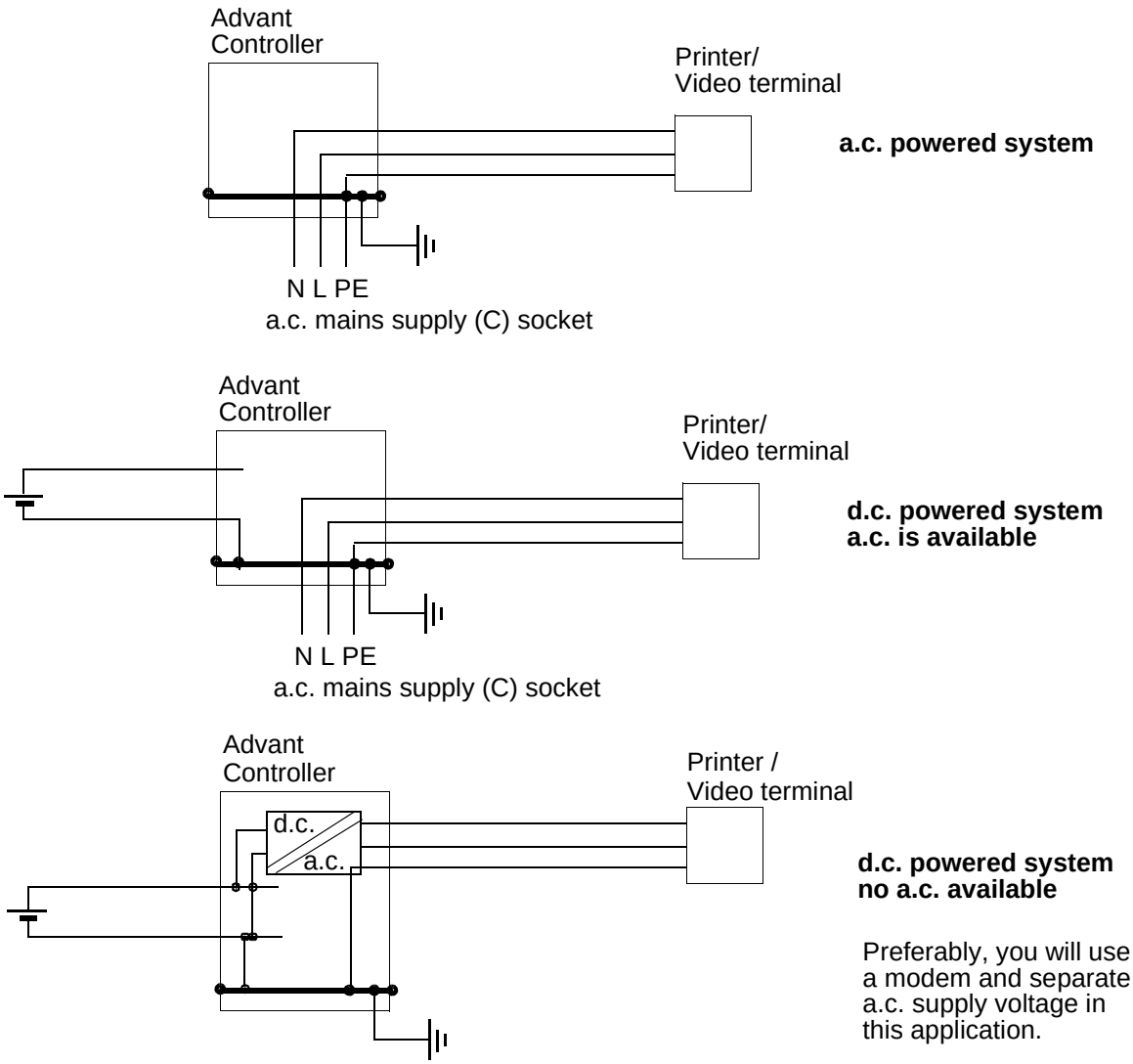

Figure 2-21. Supply of Peripheral Unit without Modem

You are directed to always check that the utilized a.c. power supply meets the quality requirements of the peripheral unit, (for example the class of the network).

Take into consideration the extra load caused by any peripheral unit:

- When an intermediate isolating transformer is used in the cabinet to convert a two-phase network to a single-phase network.
- From a fusing viewpoint.

Given the above rules, you can use any spare power outlet in the cabinet or you can arrange for an additional branching socket.

2.2.12.1 Printer

Assembly/Location

See instructions enclosed with the actual printer.

Electric Installation (including Power Supply)

Short-Distance Connection

At distances shorter than 15 m (49 ft.), join the printer with the communication module in the controller subrack with a standard cable TK520V150. See the actual delivery documentation for the controller for information regarding location of the communication module.
Cable routing in the cabinet is shown in Section 2.2.6, Cable Routing in Cabinets.

Because of the lack of isolation between the printer and the controller, it is important that they be powered from the same mains supply. See general instructions in Section 2.2.12, Peripheral Units heading Power Supply.

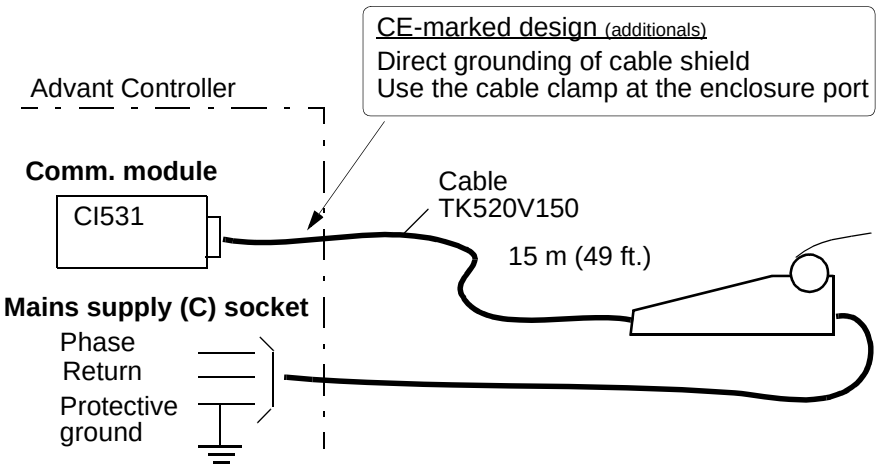

Figure 2-22. Short Distance Connection of Printer

Long-Distance Connection

If you use a communication modem, the distance between the controller and printer can be a maximum of 300 m.
The different cables prescribed are shown in Figure 2-23 below. Rules for cable shielding are given in Figure 2-24.

See the actual delivery documentation for the controller for information regarding location of the communication module and the modem.
Cable routing in the cabinet is shown in Section 2.2.6, Cable Routing in Cabinets.

From the viewpoint of the Advant Controller, there are no restrictions on the mains power supply of the printer, for example, no requirement for earthing and same supply. The controller and the printer are galvanically isolated from each other by the communication modems.

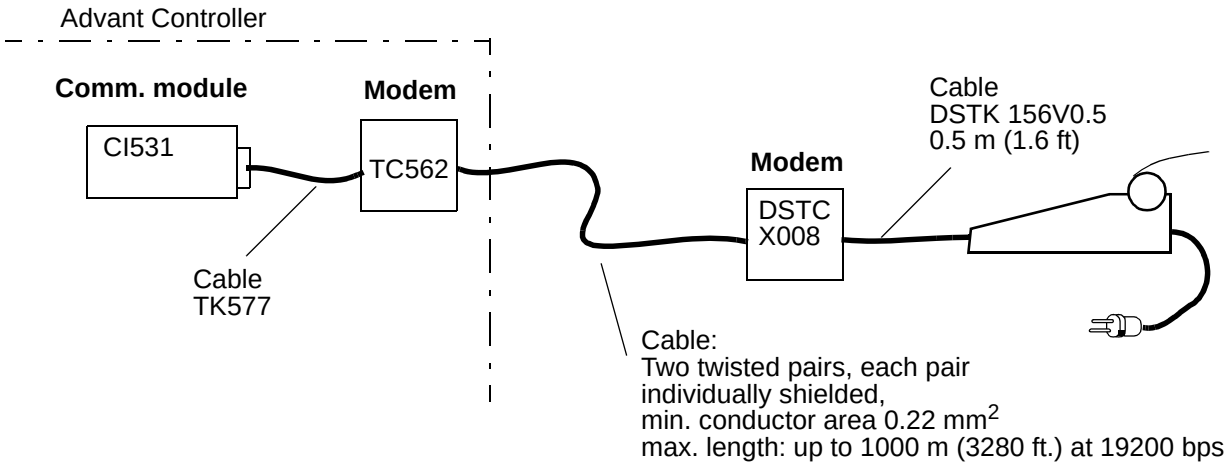

Figure 2-23. Long-distance Connection of Printer

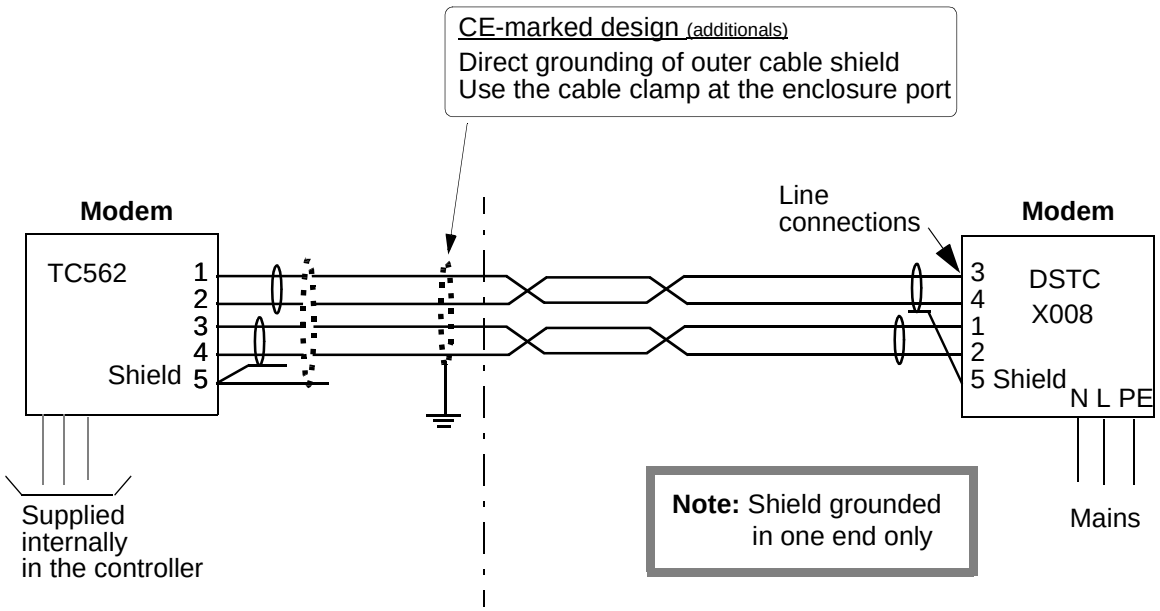

Figure 2-24. Connections and Grounding of Communication Cable Shields

Functional Measures, General

The following instructions apply.

Communication module CI531: No measures needed.

Modem: X_{ON} / X_{OFF} protocol utilized and the factory settings of the modem TC562 or DSTC X008 (jumpering) are adequate. If a.c. 230 V is not desired, please reconnect to a.c. 120 V. Instructions are enclosed with the modem.

Printer: Set the printer to meet the requirements stated in Table 2-4.

Table 2-4. Printer Settings

Data	Value
Character code	Standard 7 bits ASCII
Parity	None
Number of stop bits	1
Data word length	8 bits
Type of interface	RS-232-C
Baud rate	9600 bits/s
Protocol	X_{ON} /X_{OFF}
No. of characters per line	72
Printer speed	160 characters/s

Preparation for Start-up

Check that the printer and any modem are adapted to the mains voltage at hand.

2.2.13 Communication

Please refer to the following separate documentation:

- The user's guide for the actual communication link.
- Assembly drawings, terminal diagram forms, and so on, enclosed at delivery of the Advant Controller. These show you the location of the hardware.

The following instructions apply:

- Cable routing in cabinets, see Section 2.2.6, Cable Routing in Cabinets.
- Grounding of cable shields, see Section 2.2.5, Grounding.

Regarding cable selection, external cable routing, and so on, see general information in *Interference-free Electronics Design and Applications*.
A carefully accomplished electric installation is the basis of future interference-free operation.

2.2.14 Engineering Station

The following apply to an engineering station type Advant Station 100 Series ES when connected directly to the Advant Controller 450.

Electric Installation (including Power Supply)

Plug the communication cable enclosed with the engineering station into the X10 SERVICE connector on the processor module front.

From the viewpoint of the Advant Controller, there are no restrictions on the mains power supply of the engineering station, for example no requirement of earthing and same supply. The controller and the engineering station are galvanically isolated from each other by the communication interface.

2.2.15 Checklists

In the setup instructions, you are occasionally referred to a separate document, *Interference-free Electronics Design and Applications.*
The following checklist is a summary of important information addressed to the actual Advant Controller 450.

2.2.15.1 Grounding Philosophy, Earthing Line System

Table 2-5. Grounding Philosophy, Earthing Line System

Item	Concerning	Action
Grounding philosophy	Ground system	Grounding only to power earth line network. Only one ground system. No exceptions.
Earth line system	Design	The earth line system of the installation must be carefully installed and must incorporate the switchgear.

2.2.15.2 Process Cabling, Shielding, Grounding, Maximum Length

Table 2-6. Process Cabling, Shielding, Grounding, max. Length

Item	Concerning	Action
Cables	Prescribed type	Communication cables Pulse transducer cables Shielded for AI ≥12 bit and for Low level AI (Pt, thermocouple) Same signal types in same cable (low level/d.c./a.c./ communication/power supply) Signal wire and return wire in same cable
Shielding: Single shield	Grounding: AI, AO, DI, DO, Modem DSTC X008/TC562 Grounding: Communications pulse transducers	Same position as signal circuit At both ends
Shielding: Double shield	Grounding: Outer shield Inner shield	 Both ends As signal circuits
Cable without shield	Grounding	All signal circuits grounded at the same end
a.c. digital inputs 120 V/230 V	Max. cable length	Approx.: 115 V - 230 m 230 V - 115 m
Shield connections in EMC-proof cabinet	Connection	Cable shields which are grounded in the cabinet must be grounded according to separate instructions. (See Section 2.2.5, Grounding).
Shielded cables not grounded in the EMC-proof cabinet	Connection	Capacitive decoupling is to be used in the cabinet. Or a cable with double shield can be used where the outer shield is grounded in the cabinet.

2.2.15.3 Supply

Table 2-7. Supply

Item	Concerning	Action
a.c. Mains	Connection in cabinet	Phase (**check for correct voltage)** Return Protective earth (if distributed) **Note:** There must be no breaks in the protective earth line before the connection to the PE terminal.
	Fuse	In phase (phases)
	Connection of network:	No unsuppressed load on same finale circuit from distribution box
	Using of interference-sensitive power supply units not manufactured by ABB	Special isolation transformer for electronics supply must be used
	Internal distribution	Incoming power supply (120/230 V) must be separated from other cables by 5 cm or more
d.c. (floating battery)	Earthing, supply	Negative pole to PE terminal of cabinet directly at entry to cabinet.
d.c. (earthed battery)	Connection	Via d.c./d.c. converter
Subrack supply	Max. power output	< 90% of stabilizer capacity

2.2.15.4 Lightning Protection

Table 2-8. Lightning Protection

Item	Concerning	Action
Lightning protection		Actions are compulsory for all circuits in: Overhead lines Cables above ground Cables that leave the general earth line network

2.2.15.5 Subrack, Connection Unit, Circuit Board

Table 2-9. Subrack, Connection Unit, Circuit Board

Item	Concerning	Action
Mounting rail (for connection units)	Ground connection to cabinet chassis via mounting screws	If problems, check R < 100 mΩ, measured with equipment switched off and ribbon cables disconnected
Subrack	Ground connection to cabinet chassis via mounting screws	If problems, check R < 100 mΩ, measured with equipment switched off and ribbon cables disconnected
Connection unit	Ground connection to mounting rail via mounting screws	All screws fully tightened
Mounting rail mounted outside the cabinet (1) or in nonstandard cabinet	Electrical connection to cabinet from both ends of mounting rail. Internal or external cabling to connection unit must be kept apart.	R < 100 mΩ, A = 10 mm^2 in tele rack 2,5 mm^2 in the cabinet Spacing > 100 mm
Circuit board with 0V at X2	Grounding of 0V	Connection to chassis from X2 0V <50 mm
Connection	Quality	Only correctly made, screwed or clamped connections are approved **Note:** Inspected and approved tools must be used
Circuit boards	Variant reference	Check for lowest revision approved variant to be used for the equipment and use replacement of the same or higher revision number. This item is mainly relevant to maintenance and use of spare parts.
Circuit boards	Assembly	Check that all units located in the subracks are properly inserted.
Analog input circuit boards	Full accuracy in the frequency range	DSAI 130A + DSTA 135 (131) The other analog units can have for some frequencies in frequency range 0.15 MHz to 60 MHz error > 0.2%

(1) This application does not meet the limits for emission and therefore is not generally allowed within the EEC area (EU, EFTA).

2.2.15.6 Cabinets, Internal Cables

Table 2-10. Cabinets, Internal Cables

Item	Concerning	Action
Row of cabinets	Electrical connection (grounding)	Through short 35 mm^2 copper conductors or horizontal copper rail joining the PE terminals in each cabinet.
Hinged frame	Electrical connection to chassis (copper bar)	2 cables, top and bottom of hinged frame L < 250 mm, A = 10 mm^2
Cabinet parts (plates)	All parts electrically connected to each other and to the copper bar Divided cabinets	R < 100 mΩ Connection with special screws and nut bars
Earthing in cabinet	Design	Only a single grounding system for Advant OCS equipment **NO EXCEPTIONS**
Lighting	At maintenance	Only by filament lamp
Temperature in cabinet	Max. permitted temperature for continued operation.	Max. permitted temperature for continued operation in cabinet is 55°C. Measured just above the subracks. If this value is exceeded the number of circuit boards must be reduced.
Radio emission	Emission	Where EN or FCC requirements must be met, only EMC-proof cabinet is adequate.
Shielded cable/ ribbon cable	Design	Communication, pulse transducers and analog circuits for Low level AI (Pt, thermocouples) must be shielded up to the circuit boards
Internal cables	Routing	See: Section 2.2.6, Cable Routing in Cabinets. Check that there is no tension in the wiring.

2.2.15.7 External Cables

When you are selecting suitable cables to use and when the cables are placed in the plant, be aware that there are some restrictions and rules to be followed which involve, among other things:

- The distance between Advant OCS cables and non-Advant OCS cables.
- The routing of communication cables.
- Mixing of signals and signal types within cables.
- The need for shielded cables.

See the electrical installation rules given in the sections above and the general document *Interference-Free Electronics Design and Applications*, which also gives examples of the available cables.

2.2.15.8 Communication, Communication Cables

Table 2-11. Communication, Communication Cables

Item	Concerning	Action
Communication cables with shield (not coaxial cables)	Electrical connection to chassis	≤50 mm (1.9 inch.) (1)
	Max. permitted length	Max. specified length must not be exceeded
Coaxial communication cables	Electrical connection to chassis	Not to be directly earthed or earthed at one point only (1)
	Max. length	Max. specified length must not be exceeded
Communication without modem	Routing of cables	More than 100 mm (3.9 inch.) away from other cables
MasterBus 300 MasterBus 300E GCOM (Ethernet)	Cable length	Multiple of 23.4 m max. 500 m (1640 ft.)
	Joints	At odd multiple of 23.4 m (77 ft) (1, 3, 5 . . . .)
	Outdoor installation	Teflon cable in conduit which is grounded at both ends. An additional earth line > 35 mm^2 routed in parallel with the conduit and grounded at both ends.
	Routing	300 mm (11.8 inch.) away from other cables or on separate cable rack. For outdoor installation: underground in steel pipes.
	Transceiver	Positioned at cable marking. Insulated from the ground plane >100 mm (3.9 inch.). Not covered with other cables.
	Drop cable	Separated from other cables >100 mm (3.9 inch.) All shields must be connected together at both ends.

(1) Special rules apply to a CE-marked design. Refer to Section 2.2.5.5, Grounding of Communication Cable Shields

2.2.15.9 Miscellaneous

Table 2-12. Miscellaneous

Item	Concerning	Action
Relays and contactors in cabinets	Suppression	Cabling to non-suppressed inductive loads in Advant OCS cabinets must be kept more than 100 mm away from internal cables.
Thermo-couples	Supply connection Position of "CJC" (compensation unit for cold junction DSTA 155/155P)	Power supply for compensation of cold junction on DSTA 155/155P is taken from the cabinet. DSTA 155/155P must be placed as close to the object as possible. Located in the cabinet only if original (old) cabling is to be used.
Analog inputs/outputs	Type	Correct type: For grounded transmitters/ actuators/loads the inputs/outputs must be differential or isolated.

2.2.16 Final Procedures Before Start-up

Remove all debris remaining from the work performed and clean off all grease and dirt. Check that no tools or assembly materials are left in the cabinets. Vacuum-clean the cabinets.

2.3 Shut-down Procedures

Before power supply switch-on and start-up of the equipment, it is important that you know how to shut down in different situations.

Necessary Outfit

No special kit needed.

2.3.1 Safety Regulations

The instructions given in Section 2.2.1, Safety Regulations are applicable in all situations when you work with an Advant Controller and associated equipment. Please read the instructions carefully. One instruction is highlighted:

DANGER

Work with care when supply voltage is applied in the system. The voltage in the cabinet can cause injury and can even kill a human being.

2.3.2 Controller and I/O

Emergency Shut-down

An emergency stop should always be available. Adapt it to local statutory regulations. This is an obligation of those responsible for the plant design and construction. The controller system does not supply this specially arranged function.

NOTE

Check the location of the emergency stop and use it in an emergency situation.

From an electrical and functional viewpoint, an emergency stop has the same consequences to the controller and attached equipment as a safety shut-down. See below.

Safety Shut-down

The controller and its S100 I/O mounted in a row of joined cabinets are, from the mains power supply viewpoint, an entity. Safety shut-down aimed at disconnecting the controller from the mains is carried out in two ways:

- As prescribed in the site planning section, Section 2.1.7, Power Supply and Fusing, there should be a common safety switch installed within 3 m from the cabinets.

  NOTE

  Check the location of the safety switch and use it when working with the equipment.

  The safety switch should shut down the power supply of not only the electronics system but also the adequate transducers and other process objects. In other words, a total power shut-down for the plant section controlled.

  Since the safety switch is a plant component, this document cannot stipulate and describe the design exactly. Please check the plant documentation in this respect carefully. Instructions indicating the extent of the power supply shut-down should be attached to the safety switch.

- You can also create a selective power shut-down of the entire electronics system using the mains circuit breaker in the lower part of the cabinet where the controller subrack resides. The breaker is labeled S1.
  This circuit breaker sometimes also disconnects the field equipment supply for the plant.

  NOTE

  Sometimes exist several breakers. See Section 2.2.7, Power Supply Connection

Regardless of the shut-down method, the result and consequences are:

- Application program execution immediately stops.
- There is zero output to the process objects.
- Output relays are de-energized.
- The RAM, including system software and application program, is secured against loss of power by a supply of power from a battery backup.
- Important process values, for example totalized flow values, register content, and so on, can be stored automatically if measures are taken when the application start program is designed.
- The system is ready for a restart. You perform a restart by operating the actual mains switch when the reason for the shut-down is resolved.
  The application start program also facilitates a different way to start up the application, depending on the time of power supply disconnection.

A note about the application of distributed S100 I/O, S400 I/O and S800 I/O:
If such an I/O system is powered from the central system (the mains distributed), then the instructions and consequences given above in connection to a shut-down are relevant.
If, however, the distributed S100 I/O system, the S400 I/O system and the S800 I/O system are powered by a separate mains, separate safety switch, and so on, then you must make a distinction between a "central" and "local" shut-down.

S100 I/O

A central shut-down causes the S100 I/O outputs to go to zero.
A local shut-down causes the S100 I/O outputs to go to zero.

S400 I/O

A central shut-down causes the S400 I/O outputs to **freeze** or go to zero, as applicable.
A local shut-down causes the S400 I/O outputs to go to zero.

S800 I/O

A central shut-down causes the S800 I/O outputs to **freeze** or go to a predefined value, as applicable.
A local shut-down causes the S800 I/O outputs to go to zero.

Regarding the output behavior attached to S100 I/O, S400 I/O and S800 I/O, please be aware that zero output is the designed state. It cannot be guaranteed under all conditions, for example, in the event of a failure.

Manual Stop

Besides the most drastic shut-down method—disconnecting the power supply—other methods of "stopping" the controller are available to you.

You can stop program execution as follows:

- Use the operator's interface on the processor module front.
  - Set the start mode selector in 2 (STOP) position.
  - Depress the ENTER button and the system stops.
- Use an engineering station connected to the controller.
  - Command ECONFIG in an adequate session.

The result of a stop and its consequences are compatible for the two manual stop methods:

- Application program execution immediately stops.
- There is zero output to the process objects.
- Output relays are de-energized.
- There is no loss of process data (besides what is happening in the process in the meantime).
- The system is ready for a restart. To perform a restart:
  Set the start mode selector in 1 (AUTO) position and depress the ENTER button or Command DICONFIG.

Automatic Stop

For the sake of completeness, the main reasons for an automatic stop are listed below:

- Loss of power supply
- Fault in power supply
- Fault in central processing unit and memory
- Other fatal error.

The result of an unintentional stop and its consequences are, from the viewpoint of design philosophy, the same as for a safety shut-down (see above). However, when there is a fault involved, other behavior must be taken into account.
After necessary measures, a restart can take place.

2.3.3 Peripheral Equipment

Shut-down of peripheral equipment, like a printer or local operator station MasterView 320, is treated below from the viewpoint of power supply disconnection only.

Regardless of whether the peripheral equipment is powered common to the controller or from a separate mains, you can shut down by disconnecting the mains whenever necessary. Any faults or disturbances that may occur are local to the peripheral equipment only, for example a missing printout.
You can restart by switching on the power supply whenever you like with respect to the controller function. The peripheral equipment is self-initialized.

2.4 Start-up Procedures

Activities up through "ready for application program loading" are described in this section. This includes power-up and the first definition/configuration of the system resources.
A visible result of the start-up procedures is that all red LEDs on module fronts are turned off and all green LEDs are turned on.

Necessary Outfit

The following kit is a minimum requirement:

- Ordinary hand tools.
- Universal instrument, for example a digital multimeter.
- Test leads with 4 mm banana contacts and reducer contacts for a 2 mm test jack.
- Necessary parts of the documentation listed in Section 1.4, Related Documentation.
- Specific documentation enclosed at delivery.
- Advant Station 100 Series Engineering Station.

2.4.1 Safety Regulations

The instructions given in Section 2.2.1, Safety Regulations are applicable in all situations when you work with an Advant Controller and associated equipment. Please read the instructions carefully. One instruction is highlighted:

DANGER

Work with care when supply voltage is applied in the system. The voltage in the cabinet can cause injury and can even kill a human being.

2.4.2 Controller and I/O

Conditions given by "Setup"

If you finish the setup activities by using the checklists given in Section 2.2.15, Checklists, the equipment is almost ready for start. Please read the following security information first.

Measures by Security Means

Power-up of a controller and I/O presents a small but real risk of spurious output signals to the process due to a faulty hardware module.
Since this risk is very small, a general safe method, for example extraction of all output I/O hardware during the first power-up, is not recommended. You are directed, however, to be careful on a case-by-case basis.

Always identify and isolate **critical process objects** in some way if the process is energized. Examples include:

- Opened safety switch.
- Disconnected power supply.
- Use of disconnectible terminal.
- Unplugged terminal block.
- Extracted output circuit board.

Perform succeeding operations after power-up, including necessary tests, carefully.

2.4.2.1 Power-up

If, for some reason, you desire a limited power-up, the minimum equipment necessary is:

- Processor Module PM511 including a program card
- Submodule Carrier SC5x0.

1. Check that the circuit breakers on the power switch units are switched off.
   There is one circuit breaker for mains A (labeled S1) and one for mains C (labeled F1).
   Redundancy adds another circuit breaker for mains B (labeled S1).
   Reflect the relevance of:
   - Power switch in the cabinet housing the controller subrack
   - Separate power switch in any cabinet housing S100 I/O subrack with object oriented connection units (OOCU)
   - Separate power switch in physically distributed cluster of S100 I/O subrack.
2. Set the start mode selector on Processor Module PM511 in 3 (CLEAR) position.

   NOTE

   The CLEAR position is the only possible choice when you power up for the first time.

   Repeat for an eventually redundant processor module.
3. Set the switch on all bus extenders DSBC 174 in position RUN.
4. Switch on the mains supply to the cabinet and check for correct mains voltage with a multimeter at the connection terminals on the power switch unit. See the terminal diagram form enclosed at delivery.
5. Switch on the circuit breaker S1 on the power switch unit(s) in any order (mains A and B). Also switch on the miniature circuit breaker F1 for mains C.
   Several power switch and distribution units can exist in the controller cabinet or in adjacent I/O cabinets.
6. Check for the following positive indications of a successful power-up:
   - Distribution Unit SX554 — green LED LIVE (24 V)
   - Regulator SR511 — green LEDs 5 V and 2 V
   - Backup Power Supply SB511 (or SB510) — green LED IP
   - Processor Module PM511 — green LED RUN display ind. P2

     (Indicating working mode P2, CONFIGURATION)
   - S100 I/O Bus Extenders DSBC 174 or DSBC 176 — green LEDs RUN and DC OK
   - Redundant Processor Module PM511 (BACKUP) — green LED RUN display ind. b2...b1

     (The backup unit starts in working mode b2, UPGRADING. After a while (<90s) there is a transition to b1, STANDBY). If a redundant processor module is available, and if both modules' start mode selectors are set in 3 (CLEAR) position, then the left

processor module will be PRIMARY while the right processor module will be BACKUP. Chapter 4, Runtime Operation explains alternative ways of starting. See Figure 2-25.

There are also some negative indications, for example:

– Backup Power Supply SB511 (or SB510) — red LED F (Fault), red LED BF (Batt. Fault)
(Indicating that battery is not connected)

– S100 I/O boards — red LED F (Fault)
(Indicating that the boards are not implemented)

– S100 I/O Bus Extenders DSBC 174 or DSBC 176 — yellow LEDs INIT and INHIB
(Indication that the boards are not implemented)

7. If a LAN communication interface CS513 exists and if it is addressed and set properly by on-board switches during the setup (see Section 2.2, Setup), it gives the following indications:

– Communication Interface CS513 — green LED RUN, ylw LED TX/LAN (flash), ylw LED RX (flash)
(Indicating a successful automatic configuration of the LAN communication.)

8. The target system is now ready for configuration by connecting the engineering station directly to the processor module service port. If redundant processor modules connect to the primary module. Configuration is also possible via the network if applicable and desirable.

9. Finally, set the start mode selector on Processor Module PM511 in 1 (AUTO) position. Repeat for an eventually redundant processor module.

WARNING

Do NOT push the ENTER button!

If correct indications fail to appear, trace the fault in accordance with the instructions given in Section 5.5, Fault Finding and User Repair.

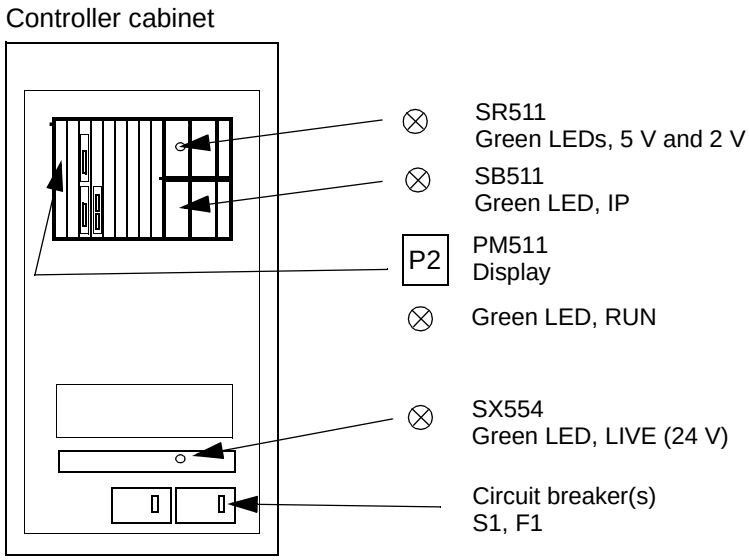

Figure 2-25. Power-up, Circuit Breakers and Positive Indications

2.4.2.2 Initialization

The power-up achieved by following the above instructions produces an automatic initialization.

In general, you can start an Advant Controller 450 in four different ways, as selected with the selector Start Mode on the processor module front. These ways and applications are described in Chapter 4, Runtime Operation.

2.4.2.3 Connection of Engineering Station

If it is not installed during the setup phase (see Section 2.2.14, Engineering Station), you can plug the engineering station communication cable into the service port X10 on the Processor Module PM511 front at any time.

- First connect the communication cable.
- Then switch on the power supply to the engineering tool.

Prepare for a session of programming Advant Controller 450.
Follow the instructions on the screen.

Work with the engineering station is supported by adequate documentation.
For detailed information about different configuration activities using an engineering tool, see the manual *AMPL Configuration Advant Controller 400 Series*.

If the actual Advant Controller 450 is a node in a LAN, you can connect the engineering station to any of the nodes included in the network. You can perform remote configuration in that way.

Additional Information for Redundant Processor Modules

Connection to Primary Unit

Connect the engineering station to the processor module which is PRIMARY ("P1" or "P2" on the number display). The operation of the engineering station/target system does not differ from its operation in a system without redundancy.

Following a changeover, the engineering station loses contact with the target system, since the processor module to which it is connected has failed. In order to reconnect the engineering station with the target system, connect the engineering station cable to the new primary unit's service port. Work can then continue, once contact with the target system is established (RECONNECT).

Remote configuration via LAN is not influenced by a changeover.

Connection to Backup Unit for Maintenance

See Chapter 5, Maintenance.

2.4.2.4 Controller System Configuration

Procedures, Overview

The initial design work with the controller should result in a system definition which is used as a basis for the next step of the start-up procedure, the controller system configuration. This is performed in the working mode CONFIGURATION. The start mode selector on the processor module front is kept in 1 (AUTO) position, which was set **after** the power-up.

The controller system configuration is the practical work required to create the infrastructure of the controller, that is the computer resources to maintain the application functions.

Configuration/application building is not part of the installation work described here. It is regarded as a separate activity and is treated in Chapter 3, Configuration/Application Building and in separate documentation. However, application work and the work to define the system resources are in some ways related. This is illustrated in Figure 2-26.
The most important conclusion is that dimensioning of the system requires information from the application work, for example, definition of number of I/O boards, PID controllers, trends, number of PC programs, and so forth.

Dimensioning in this context means distribution of the available memory to functions that particularly require memory.

You can redimension in a later stage, but it is time-consuming work. The general rule is to plan well from the start. Always dimension the spares!

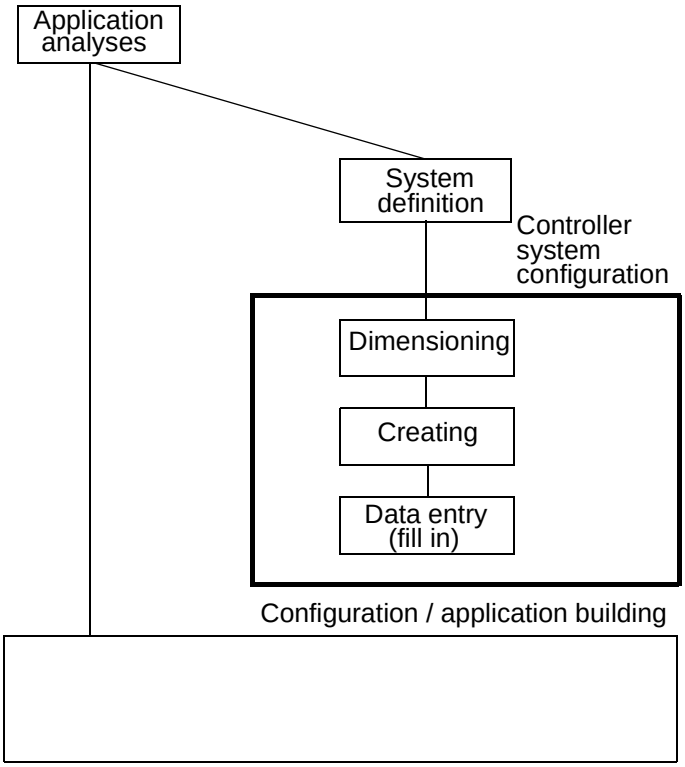

Figure 2-26. Controller System Configuration in a Broad Outline

From a configuration viewpoint, not all functions to create the infrastructure of the controller are treated in the same way. Some of them are touched by all activities illustrated in the figure above. Some are automatically included in the controller system and need only limited data entry. For an overview, see Table 2-13, which features an outline of controller system configuration information.

Dimensioning, creating and data entry are described in detail in separate documentation. For a detailed description of the principles of the controller system configuration work, the dimensioning and creation of records, and the interactive work using an engineering station, see the manual *AMPL Configuration Advant Controller 400 Series*.
See Chapter 3, Configuration/Application Building for considerations, the maximum number of items, and so on.

For data entry details, see the manual *Data Base Element Reference Manual.*

Function List with an Outline of Controller System Configuration Information

Table 2-13. Function List with an Outline of Controller System Configuration Information.

Function/ occurrence	Dimen-sioning	Creating (1)	Data Base Element		Data entry (2)	Comments
			Call name (3)	Item. design. (default name) (4)		
The controller entity (Incl. superv./system status)	No	Autom.	(AC450)	AC450_1	Demand	
Processor Module incl. system SW backup	No	Autom.	(PM511)	PMx	No	
Additional system SW backup	No	Autom.	(MB510)	SSWx	No	
System clock (external synchronization)	No	Autom.	(CLOCK SYNCH)	CLS1	Demand	
Free-Programmable Module	No	CRDB	PU535	FMPx	Demand	
RAM disposition	See text below					
LAN, Local Area Network --MasterBus 300 executed in main CPU --MasterBus 300 executed in slave CPU --MasterBus 300E executed in main CPU --MasterBus 300E executed in slave CPU	No	Autom.	CS513	LANx	No	
GCOM	Yes	CRDB	CI543	MVIx	Demand	
Bus extension to S100 I/O	No	Autom.	(DSBC_174)	BEx	Demand	Also valid for DSBC 176
S100 I/O boards	Yes	CRDB	Misc. (5)	Misc. (5)	Demand	
ABB MasterFieldbus	No	CRDB	CI570	MFx	Demand	
S400 I/O units	Yes	CRDB	Misc. (5)	Misc. (5)	Demand	
Advant Fieldbus 100	Yes	CRDB	CI522A	AF100_x	Demand	
AF 100 Stations: --AC 70 (PLC) --AC 110 (PLC) --General Station --S800 I/O Station (single) --S800 I/O Station (red.)	Yes	- CRDB CRDB CRDB CRDB CRDB	- AC70 AC110 AF100S CI810 CI820	 AC70_x AC110_x AF100S_x AF100IOS_x AF100IOS_x	- Demand Demand Demand Demand Demand	Number of AF 100 Stations incl. AC 70, AC 110, General Stations and S800 I/O stations must be dimensioned
S800 I/O modules	Yes	CRDB	MISC. (5)	Misc. (5)	Demand	

Table 2-13. Function List with an Outline of Controller System Configuration Information. (Continued)

Function/ occurrence	Dimen-sioning	Creating (1)	Data Base Element		Data entry (2)	Comments
			Call name (3)	Item. design. (default name) (4)		
Data Set Peripheral	Yes	CRDB	DSP	DSP_x	Demand	Basic cycle time can be changed via APP command
PROFIBUS-DP:	Yes	CRDB	CI541	PBx	Demand	
--PROFIBUS Slave		CRDB	PBS	PBSx	Demand	
--PROFIBUS Slave Descr.		CRDB	PBSD	PBSDx	Demand	
LONWORKS:	Yes	CRDB	LON	LONx	Demand	When LON is created it automatically creates 2 LONCHAN channel data base elements, specify type CI572 or CI573.
LONWORKS Device	Yes	CRDB	LONDEV	LONDEVx	Demand	
LONWORKS Network variable of input type	Yes	CRDB	LONNVI	LONNVx	Demand	
LONWORKS Network variable of output type	Yes	CRDB	LONNVO	LONNVx	Demand	
LONWORKS Multiple network variable	Yes	CRDB	LONMNVI	LONMNVIx	Demand	
LONWORKS Event treatment	Yes	CRDB	LONEVTR	LONEVTRx	Demand	
LONWORKS Multiple references	No	CRDB	LONMREF	LONMREFx	Demand	
EXCOM	No	CRDB	CI531	RS232_x	Demand	When config. of CI531 the disposition of HW module CI531 channel 1,2 is entered. Possible values are: PRI_01, XCOM_1, XCOM_2, TERM_1, ...TERM_4
V.24/RS-232-C (Terminal, Printer)	No	CRDB	CI531	RS232_x	Demand	
RCOM	No	CRDB	CI532	MVIx	Demand	Function variant, RCOM or MVI type, is defined by the used hardware module. For example RCOM uses CI532V01
MultiVendor Interface (Standard protocol)	Yes	CRDB	CI532 or MVIMOD (6)	MVIx	Demand	
MVI Free-programmable communication	Yes	CRDB	CI535 or MVIMOD	MVIx	Demand	DB element CI535 for module CI535 and MVIMOD for module CI538

(1) CRDB stands for the engineering tool command CReate Data Base.
(2) No data entry means that default values exist and it is not necessary to enter any data. User-unique names can be introduced if desirable.
(3) The call name is used in connection to command CRDB.
A parenthesized ( ) call name indicates that the call name cannot be used with the command CRDB.
(4) The item designation (default name) or a user-defined name is used to access an element with the command MDB, Modify Data Base. The item designation can always be used, independent of whether or not a user-defined name exists
(5) Miscellaneous refers to different elements for different I/O board, I/O unit or I/O module types.
(6) Depending on protocol.

Dimensioning and Disposition of RAM

To show the total requirement for dimensioning and disposition of the RAM when the controller is started for the first time, a list of functions/occurrences to be dimensioned is given below. The information is structured as it will appear in the engineering tool.

Dimensioning of the Data Base, DIMDB Command

Process I/O

Number of MFB Units (MasterFieldbus)
(incl. number of CV units for communication with Drives system
and PX units for MasterPiece 51)
Number of REDUNDANT / OBJECT BOARDS
Number of S800 AI MODULES
Number of S800 AO MODULES
Number of S800 DI MODULES
Number of S800 DO MODULES
Number of S800 DP MUDULES
Number of AI-BOARDS
Number of AO-BOARDS
Number of DI-BOARDS
Number of DO-BOARDS
Number of AI-SIGNALS
Number of AO-SIGNALS
Number of DI-SIGNALS
Number of DO-SIGNALS

Data Transfer & Communication

Number of DAT
Number of DS
Number of MS
Number of TEXT
Number of TS
Number of DSP
Number of EVENT SETS
Number of MVI MODULES
Number of MVI CHANNELS
Number of MVI NODES
Number of MVI BLOCKS

Fieldbuses

Number of AF 100 FIELDBUSES
Number of AF 100 STATIONS
Number of PROFIBUS FIELDBUSES
Number of PROFIBUS SLAVES
Number of PBS DESCRIPTIONS
Number of LON COMMUNICATION MODULES
Number of LON DEVICES
Number of LON NETWORK VARIABLES
Number of LON MULTI NETWORK VARIABLES
Number of LON EVENT TREATMENT

MasterView 300

Number of DISPLAYS
Number of VARIABLES

Data Tables & Trend Data

Number of TTD_LOGS
Number of TTD_VARIABLES
Number of TBL_CLASSES
Number of TABLES
Number of TBL_PARAMETERS
Size of DATA TABLES (kB)
Number of FILE ELEMENTS
Size of FILE DATA (kB)

Functional Units & Group Alarm

Number of SEQ_CTRL
Number of GENOBJ
Number of MMCX
Number of PIDCON
Number of PIDCONA
Number of MANSTN
Number of RATIOSTN
Number of GRPALARM
Number of GRPMEMB

Drives

Number of DRISTD
Number of DRIENG

Fire & Gas

Number of GI_BOARDS
Number of FI_BOARDS
Number of GI_SIGNALS
Number of FI_SIGNALS

Redimensioning of the Data Base

You can redimension at a later stage.

1. Make a copy of the data base. Use the command DUTDB.
   This copy includes the DIMDB information.
2. Load the copy. Use the command LOTDB.
   When loading, you can select, among other things, REDIMENSION from a dialog.

Dimensioning of Space for PC Program

Size of PC program tables
Number of PC programs
Number of scan places in interpreter A, B, C, respectively
Size of USER disk application segment area

Redimensioning of Space for PC Program

You can redimension at a later stage.

1. Make a copy of the PC program. Use the command DUTPT.
   This copy includes the DIMPC information.
2. Load the copy. Use the command LOTPT.
   When loading, you can select, among other things, REDIMENSION from a dialog.

2.4.2.5 Configuration/Application Building

Configuration/application building is not part of the installation work described here.
It is regarded as a separate activity and is treated in Chapter 3, Configuration/Application Building of this manual as well as in separate documentation, for example the reference manual *AMPL Configuration Advant Controller 400 Series*.

The configuration/application building ends up in an application program. This program is divided into a data base part and a PC program part.
Primarily, the application language AMPL is used during program design.
Enter the program manually or load it from a diskette. An engineering station is used.

If an application program is already created, for example in an identical system which is already tested, a program copy (dump) is loaded from this system.

2.4.2.6 Dumping and Loading

At regular intervals, make a backup copy of the data base content and the PC program.

After dimensioning and populating the data base in working mode CONFIGURATION, dump it and re-load it with compression to minimize the memory space occupied.

See the list below of available dump and load commands, which are further described in the manual *AMPL Configuration Advant Controller 400 Series*.
For a description of source code handling aimed at making the data base and PC program transferable between different Advant Controller systems, see the manual *Source Code Handling*.

Because of the division of data base and PC program, dump/load commands are directed to the individual parts and to the total application program. They are used in different situations as follows.

Table 2-14. Dump and Load Facilities

Description of use	Dump command	Load command
Backup of application A total RAM backup of data base and PC program. The backup also includes DIMDB, DIMPC information.	DUAP DUmp Application Programs	LOAP LOad Application Programs
Redimensioning and temporary backup of the data base. The backup also includes DIMDB information which is deleted at redimensioning.	DUTDB DUmp Total Data Base	LOTDB LOad Total Data Base
Redimensioning and temporary backup of the PC program (object code). The backup also includes DIMPC information which is deleted at redimensioning.	DUTPT DUmp Total Program Table	LOTPT LOad Total Program Table

Table 2-14. Dump and Load Facilities (Continued)

Description of use	Dump command	Load command
Source code of data base (1)	DUDBS DUmp Data Base Source	TRDBS TRanslate Data Base Source
Source code of PC program See text below (2)	DUPCS DUmp PC Source	TRPCS TRanslate PC Source

(1) DUTDB/LOTDB is sometimes a **faster** alternative than source code handling (source code is always possible). The compatibility code for the data base of the system software decides.
Possible causes of non-compatibility (and need of source code) are: new release, revision, changed mix of optional program modules.

(2) PC program source code is transferable between different Advant Controllers provided that the PC elements exist in the system in which the dump is to be loaded.

Certain events and handling of the controller system result in clearing the RAM (set to zero). A total RAM backup (DUAP/LOAP) is needed to restore the memory. Or a backup of the application on flash memory card can be used. The latter feature was introduced by product release 1.2. Table 2-15 shows the situations which result i clearing the RAM.

NOTE

The listed situations in Table 2-15, besides clearing the RAM, automatically:

1. Boot the system.
2. Load system software from the system program card (backup).
3. Alternatively
   a. Set the controller in working mode CONFIGURATION, ready for application program load, LOAP, from an engineering station.
   b. Or, if an optional application program card (backup) is available, load the application software ending up in the working mode prevailing when the backup was created. For example working mode OPERATION.

Table 2-15. Situations which Cause Clearing of the RAM

Event	Start mode selector position
Power-up	3 (CLEAR)
Command RECONFIG	Any position
Pushing ENTER button on processor module front	3 (CLEAR)
Fatal error in central units(1)	Any position

(1) A remaining fatal error of course will prevent loading and restart

2.4.2.7 Summary of the Controller Start-up and Verification of the Start

The following summary is a basic "from scratch" step-by-step instruction explaining how to start up. Other working schedules exist, especially in connection to revisions and system enlargement. Please refer to the reference manual *AMPL Configuration Advant Controller 400 Series* for complete information.

1. Power up
   Set start mode to 3 (CLEAR) on processor module
   Set power switch on
   For indications which verify a successful power-up, see Section 2.4.2.1, Power-up.
2. Working mode CONFIGURATION
   Automatically enter the working mode CONFIGURATION at power-up
   Then set start mode selector in position 1 (AUTO). **No** ENTER
   Processor module indicates P2 (working mode CONFIGURATION).
3. Controller system configuration
   a. Dimensioning of data base, DIMDB
   b. Creating the data base, CRDB
   c. Data entry of data base, MDB
   d. Dumping and loading (compress) the data base, DUTDB/LOTDB
   e. Dimensioning of PC program tables, DIMPC (have to be done to enable update of I/O signals).
4. Configuration/application building
   a. Populating the data base, MDB
   b. Entering and editing PC program, miscellaneous commands
   c. Dumping and loading PC programs, DUTPT/LOTPT.
5. Backup of the entire RAM, DUAP.
6. Disabling working mode CONFIGURATION, DICONFIG.

   In addition to those indications obtained at power-up:

   – All red LED F (Fault) on S100 I/O board fronts are switched off.
   – The yellow LEDs INIT and INHIB on S100 I/O Bus Extenders DSBC 174/ DSBC 176 board front are switched off.
   – The processor module changes over and indicates P1 (working mode OPERATION).

The system is now started and ready for operation.
Perform the final stages, which include start of application program execution, successively and relate to the product verification. One PC program at a time.

WARNING

When the application program is started, the process to be controlled is influenced.

Significant engineering tool commands to use are:

1. DIsable Build Mode, DIBM PCx
2. DeBLock, DBL

NOTE

DIMPC must be performed to get update of I/O signals.

Indications of an operating system with a started application:

- Analog inputs
  A/D conversion in progress, LED C flashes (not all board types).
- Analog outputs
  Output signals are produced by the executing PC program.
- Digital inputs
  The LEDs on I/O board fronts show the process status regardless of whether or not the PC program is executing.
- Digital outputs
  Output signals are produced by the executing PC program.
  Indicated by LEDs on I/O board fronts.

2.4.2.8 Installation of Battery for Backup of Memory

The battery is mounted inside the cabinet on the right-hand side.
When the controller is started, connect the battery. Disconnectible connectors are found close to the battery unit.

You know that the battery backup is functioning when you see the following indications:

- On the Backup Power Supply SB510/SB511 front
  - by green LED IP indicating mains supply available and converter in operation.
  - by switch-off of the red LEDs F (Fault) and BF (Battery Fault).
    Low ambient temperature may delay the switch off a few minutes.
  - the LED FC is turned on during some 10 hours, indicating fast charging.
- On the Processor Module PM511 front
  - the green LED BC is turned on.

When you plan to disconnect power for a period of time exceeding four hours (two hours when redundant processor modules are used), disconnect the battery. This avoids total discharge of the battery.
Use the disconnectible contacts on the battery unit.

2.4.3 Peripheral Equipment

Only the printer is treated below.
For a description of the terminal MasterView 320, see the manual *MasterView 320 User's Guide.*

2.4.3.1 Printer

Power-up

Turn on the power to the printer.

Configuration, Printer

Check that all programmable parameters on the printer are set according to the tables below. To check the parameters, please refer to the user's manual of the printer in question.
The basic settings correspond to the settings of the unit when delivered by ABB Automation Products AB. The language parameter is pre-set for English printout.

Table 2-16. Programmable Parameters

Parameter	Basic setting
Font	DRAFT
CPI	12 CPI
LPI	6 LPI
Country	E-US ASCII
Emulate	Epson FX-850
CharSet	Extended
C6-Tab	Graphic
Sl. Zero	Off
Auto-CR	Off
Auto-LF	Off
Skip	0.5 Inch
AutoTear	ViewTear=Off
Bidir	On
Width	13.6 Inch
Formlen	12.0 Inch
PapOpt	No
Paper Form Adj.	0/72 Inch
Interf.	Serial
Serial Baud	9600
Format	8 Bit No 1 Stop
Protocol	XON/XOFF

Configuration, Advant Controller 450

With an engineering station, you can implement a printer communication in the Advant Controller 450 using the hardware-related data base element CI531 and the data base element PRINT. The default parameter values are adequate, except the time-out value in the PRINT element, which is to be changed from 15 to 30 seconds to better comply with the usual printers.

This setting remains valid for as long as the power remains turned on, or until the RECONFIG command is given.

Verification of the Start

You can obtain verification of correct hardware configuration with the data base element PRINT. Status flags subordinated to the attribute ERR give detailed information. See the description in the DB Element manual.

You can obtain a test printout by running a PC program including the PC elements PRINT and TEXT to generate a report printout.

Please note that the data base elements CI531 and PRINT are needed to define the printer communication.

For a detailed description of the PRINT and TEXT PC elements and how to use them, see the reference manual *PC Elements Advant Controller 400 Series* and the manual *AMPL Configuration Advant Controller 400 Series*.

2.5 Product Verification

Since the test requirements vary considerably among different installations, the designer is responsible for determining the function requirements, the limits within which the function requirements are to apply and other parameters which apply in the installation.

Necessary Outfit

The following kit is a minimum requirement:

- Ordinary hand tools.
- Universal instrument, for example, digital multimeter.
- Test leads with 4 mm banana contacts and reducer contacts for a 2 mm test jack.
- Necessary parts of the documentation listed in Section 1.4, Related Documentation.
- Specific documentation enclosed at delivery, drawings, and so on.
- Advant Station 100 Series Engineering Station.

In more complex installations, which include closed loop control, some additional test equipment may be necessary/practical at tuning:

- Recorder with at least two channels
- Access to an operator station facilitating object display trim curves and trend curves.

2.5.1 Safety Regulations

The instructions given in Section 2.2.1, Safety Regulations are applicable in all situations when you work with an Advant Controller and associated equipment. Please read the instructions carefully. One instruction is highlighted:

DANGER

Work with care when supply voltage is applied in the system. The voltage in the cabinet can cause injury and can even kill a human being.

2.5.2 Servicing Tool

Installation of an engineering station, the main servicing tool, is described in Section 2.4.2.3, Connection of Engineering Station. Detailed information for its use is given in separate documentation.

2.5.3 Commissioning

2.5.3.1 General

For a general description of how to set the controller in operation and start the execution of an application program, see Section 2.4.2.7, Summary of the Controller Start-up and Verification of the Start.
Below, you can find general information on some function tests which you can perform to verify the product. Short notes on adequate facilities provided by the engineering station are also listed.
For a more detailed description, see the *AMPL Configuration Advant Controller 400 Series, Reference Manual.*

2.5.3.2 Procedure

The application program is normally checked, one executing unit at a time. This is done by deblocking the complete PC program (DIBM command) and successively deblocking the execution units, one after the other. You can, for example, check that a flow valve functions and then verify the start sequence for a pump motor, and so on.

After each sub-function is tested, a comprehensive function control is performed to verify that all execution units function together.

Finally, a full scale check of the complete installation is performed to verify that the program is in accordance with the plant specification.

2.5.3.3 Modify Permission

Executing units such as control module headers, see Figure 2-27, have built-in protection against inappropriate attempts to change their contents. When the condition "Modify Permission" (MODP) is deactivated for a control module, all attempts, from the engineering unit, to change anything in the complete PC program are prevented.

"Modify Permission" is activated/deactivated via the engineering unit with the commands EMP (Enable Modify Permission) and DIMP (Disable Modify Permission). You can obtain a list of the status of all control modules in a PC program, with respect to "Modify Permission," with the command LMP (List Modify Permission).

When each individual control module has been tested and found to be correct, the "Modify Permission" conditions of the module can be deactivated as an acknowledgment that the module is verified and to avoid unintentional change of its contents. Blockings can still be set and operational parameters changed if required.

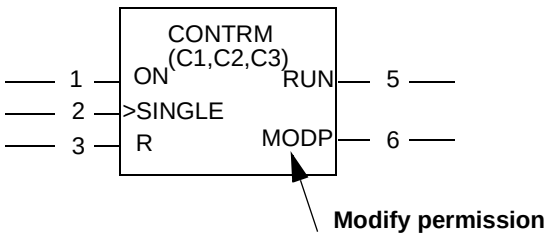

Figure 2-27. "Modify Permission" in a Control Module

2.5.3.4 Blocking and Deblocking of the PC Program

During a test of the application program, you can prevent the control system from affecting the process in two ways:

- By opening terminal switches on the connection units (or likely locations) to physically isolate output signals from the process.
- By blocking the updating of the data base with the help of certain commands.

Blocking commands and their use are listed below:

- BL — Blocking of individual or all executing units in one or more PC programs.
- BL,DB — Blocking of output to data base from individual or all executing units in one or more PC programs.
- BLRS — Blocking and resetting of individual or all executing units in one or more PC programs.
- DBL — Deblocking of individual or all executing units in one or more PC programs.

The blocking of a complete PC program gives the same result as blocking of all individual executing units in a PC program (the command BL after the conclusion of entry of a PC program blocks the program). The executing units can therefore be deblocked in succession during commissioning. In this way, each program function can be verified sequentially and program error or process error can be corrected before an attempt is made to test run the complete PC program for the process.

2.5.3.5 List of some Test Facilities provided by the Engineering Station

For a detailed list and detailed descriptions, see the reference manual *AMPL Configuration Advant Controller 400 Series*.

Presentation of Values in Data Base and PC Program

You can show a dynamic updating of several data base values on an engineering station display with the help of the command GETAB.
Use the command MDB to present a data base value.

The following example shows a digital input signal and how it is dynamically updated:

- MDB DI 1.1 (Modify Data Base)
- GVD (Get Values Dynamically)
- Interrupted with <SHIFT> <BREAK>.

Use the command GEPCD to present all values on a single PC element dynamically updated. The presentation is made in the graphical element symbol.

Further commands to use to read the values allocated to operational parameters, PC variables and constants are: MV (Modify Value), LV (List Variable).

Changing of Data in the Data Base

You can make changes in the data base with the commands MDB (Modify Data Base) or MV (Modify Variable).

Parameter Change in PC Program

Read and change the values of the operational parameters during program execution with the command MV (Modify Value).

Change of SCAN Time

Change the scanning time for an input signal with the command MDB through a change of the corresponding SCANT (SCAN Time) in the data base.

Change of Periodicity and Place in the Cycle Time Table

The periodicity (cycle time) for an execution unit is determined by the call parameter C1. The value is specified in ms. You can change the value inside an interpreter with, for example, the command MV, for example, MV PC1.1:C1.

Normally, you can select the following values.

Table 2-17. Cycle Times for Advant Controller 450

A(ms)	B(ms)	C(ms)
10	50	250
20	100	500

Table 2-17. Cycle Times for Advant Controller 450

A(ms)	B(ms)	C(ms)
40	200	1000
-	-	2000

A, B and C constitute interpreters. If an attempt is made to set a time outside the limits specified or to another interpreter, a system message is presented.

NOTE

All PC elements within a control module have the same periodicity.

The order in which several executing units with the same periodicity are executed is controlled by the call parameter C2. If no value is specified for C2, the system places this executing unit in the first vacant space in the cycle time table which specifies the order of execution.

Use the command MV to change the value of C2 to move an execution unit in the execution sequence, for example, MV PC1.1:C2.

Change of Execution Sequence for PC Elements

The PC program elements within an executing unit are always executed in the order in which they are listed in the PC list. To change the order, select the build mode with the help of the engineering station (command EBM). Use the command DS (Delete Statement) to remove the element to be moved. You can then insert (IS) the element in another place in the PC list.

The above change can be made during operation by authorized personnel. An alternative to rebuilding the PC program is to dump the PC program as source code, then edit and reload the source code. This is effective when there are considerable changes.

2.5.3.6 Tuning of Feedback Control Loops

When feedback control functions are used in the Advant Controller system, select the optimum sampling time for the process concerned and set other feedback control parameters so that the feedback control becomes stable under varying loading conditions, and so on. This is described in separate documentation.

2.5.3.7 Use of PC Programming During Operation when Commissioning

You can follow the value of signals by using the engineering station command insert (IS) PC elements and connect (C) these during operation:

- Insert an SR element to permit the study of fast pulses.
- Insert an SW element and connect several interesting signals to this. Present these signals dynamically with GEPCD.

2.5.3.8 Listing of Executing Unit Status

List the status of all executing units with the command LSS (List Special Status).
The following are examples of status listed.

- If an executing unit is in the build mode.
- If an executing unit is blocked.
- If the output from an executing unit to the data base is blocked.
- If a PC program is locked.

2.5.3.9 Check of Process Input/Output System

General

As mentioned in the setup instructions for process I/O, it is advantageous to make an integrated check of process equipment and wiring and the corresponding control function. You make this check in a circuit-by-circuit procedure. The data base is then used as one checkpoint.
An engineering station reads status/values and simulates control signals to the process objects. When an operator station is included in the system, it is most effective to maintain the check from the automatically generated process I/O object displays.

You may need to simulate digital and analog input signals which are normally generated by the process. Suitable methods to do this follow:

- Digital inputs: Activate the input by connecting a voltage which corresponds to the nominal value of the input. The "1" and "0" status is simulated by opening and closing the terminal switches. Activate the input as close to the process transducer as possible to test the process wiring as far as possible.
  Manual operation of transducers, for example, limit switches can also give the required change for the input signals.
- Analog input signals: Use a signal generator for analog signals.
  Use a simple test coupling as a voltage generator. This consists of a potentiometer coupled over a suitable voltage source which gives ± voltage.
  A current source which can give sufficient current, 20 mA, is required for current signals.
  Enter analog test signals as close to the ordinary signal generator as possible to test the process wiring.

Digital and analog output signals are obtained by setting the required values in the data base via the engineering station. This means entry of values from the keyboard for the data base elements concerned (property VALUE).

The system designer provides test specifications with the limits permitted.

As each channel is tested and approved, you can set a test flag "TESTED" in the data base with the help of MDB. This is not essential, however, for the program function since you can use simpler methods such as marking the channels on the connection diagram to register the test procedure.

Input Signals

Figure 2-28 shows in principle where to check an input signal in an S100 I/O application.

DI boards provide X90 connector and DI channel LEDs.

AI boards provide X90 connector, a test terminal X3 and a common-to-all-channels A/D conversion indicating LED.

See separate documentation for detailed information.

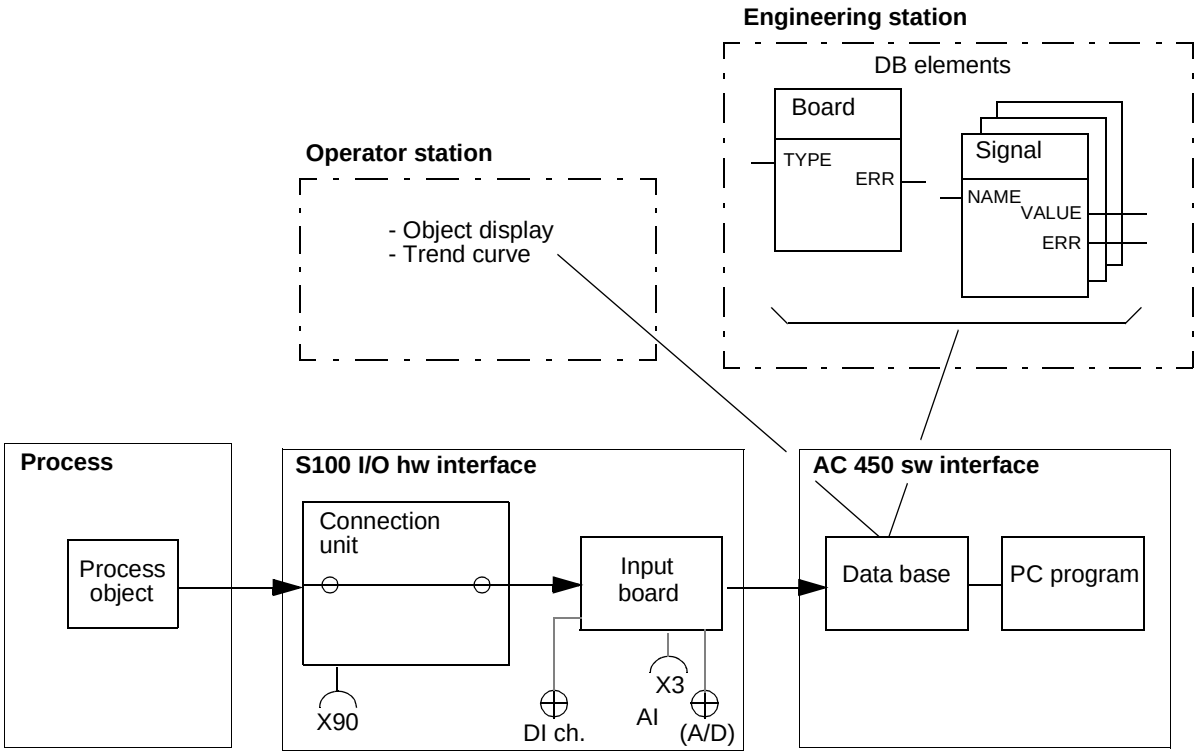

Figure 2-28. Principal Block Diagram of S100 I/O Input Channel, Test Points

- **Digital Input Signals**

  Figure 2-28 shows where you can check a digital input signal in an input channel. Proceed as follows:

  – Use the command MDB (Modify Data Base) to present the data base element. Use GETAB as an alternative.

  – Ensure that the connections of the data base element are filled in correctly for the signal to be examined. See the data sheet for the data base element.

  – Simulate the digital input signal as close to the process transducer as possible or activate the transducer itself.

  – Check that the corresponding yellow LED on the input board concerned illuminates

and that the change is registered by the property VALUE on the display screen in the engineering station. For MDB, use GVD for dynamic updating of the values on the display screen.

– Change the input signal to a low level. Check that the yellow LED on the input board extinguishes and that the property VALUE is changed.

- **Analog Input Signals**

  Figure 2-28 shows where you can check an analog input signal in an input channel. Proceed as follows to check an analog input channel:

  – Check first that all data base connections are filled in correctly for the signals to be checked, also and that solder straps for voltage signals are removed or clipped.

  – Simulate the analog input signal as close to the process transducer as possible.

  – Use the command MDB to present the element. GVD gives dynamic updating. Use the command GETAB, which gives dynamic updating, as an alternative.

  – Check that the simulated signal is available at the screw terminal of the corresponding connection and at test terminal X3.

  – Check that the value read on the display screen (property VALUE) is the same as the simulated value set. Check the complete signal range.

  For a description of the adjustment of analog input signals, see Chapter 5, Maintenance.

Output Signals

Figure 2-29 shows in principle where you can check an output signal in an S100 I/O application.

DO boards provide X90 connector and DO channel LEDs.

AO boards provide X90 connector.

For detailed information, see separate documentation.

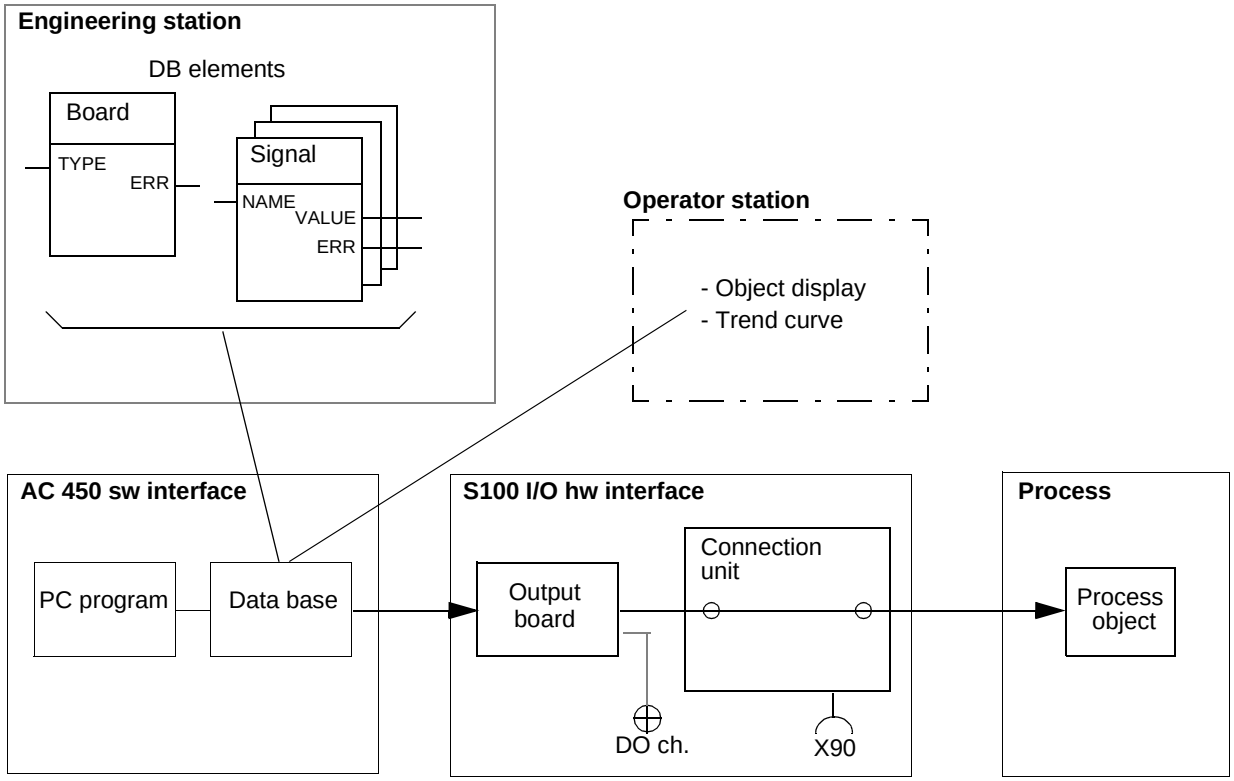

Figure 2-29. Principal Block Diagram of S100 I/O Output Channel, Test Points

- **Digital Output Signals**

  Figure 2-29 shows typical digital output channels and where you can test the signals. Digital output signals in a specific plant are shown in the connection diagrams for the plant.

  Proceed as follows to check digital channels:

  – Use the blocking command (BL) to block any PC programs already entered.

  – Ensure that the data base connections for the output signals concerned are correct.

  – Use the command MDB on the engineering unit to present the element in the data base, set the VALUE and check that the corresponding output shows this value. Then measure the value on the screw terminal block of the corresponding connection unit end and, if practical, at the process as well.

  – Check that the corresponding yellow LED on the digital output board concerned illuminates.

When you are checking analog output signals, use a multimeter to test that an output signal is obtained over the complete signal range.

- **Analog Output Signals**

  Figure 2-29 shows typical analog output channels and where you can test the signals. Analog output signals in a specific plant are shown in the connection diagrams for the plant.

  Proceed as follows to check analog channels:

  – Use the blocking command (BL) to block any PC programs already entered.

  – Ensure that the data base connections for the output signals concerned are correct.

  – Use the command MDB on the engineering unit to present the element in the data base, set the VALUE and check that the corresponding output shows this value. Then measure the value on the screw terminal block of the corresponding connection unit end and, if practical, at the process as well.

  – When you are checking analog output signals, use a multimeter to test that an output signal is obtained over the complete signal range.

  For a description of adjustment of analog output signals, see Chapter 5, Maintenance.

  Readjustment of Analog Output Signals

  AO boards are factory adjusted for voltage output signals. If current signal is desired/jumpered, you must readjust for maximum accuracy. Please follow the instructions given in Section 5.5.12, Channel Adjustment on AO Board.

2.5.3.10 Listing of PC Program and Data Base

When the PC program is entered, you can obtain a printout from the printer connected to the engineering tool for editing or documentation purposes. Two different types of printout are available:

- Printout as a graphic diagram with LPCD (List PC Diagram). See Figure 2-30.
- Printout as a program list with LPCL (List PC List). Use this to your advantage when you need rapid listing of a PC program on a printer or screen and when listing on a printer without graphic mode. See Figure 2-31.

Use the command LDBD (List Data Base Diagram) to print the data base.

All procedures are described in the manual *AMPL Configuration Advant Controller 400 Series*.

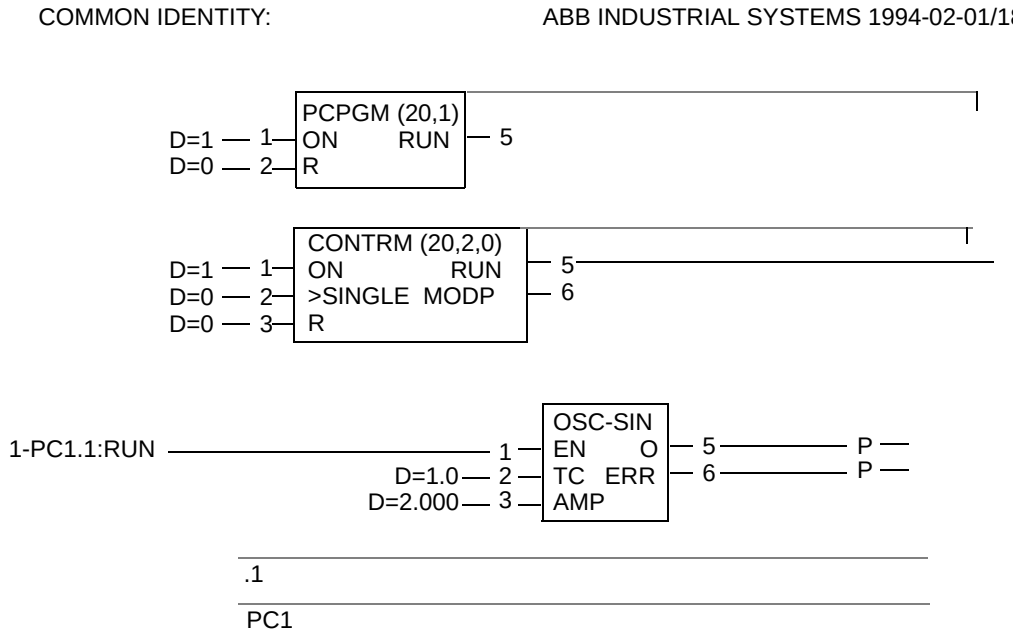

Figure 2-30. Graphic Diagram

ABB INDUSTRIAL SYSTEMS PCD PAGE: 1

IDENTITY		NAME	TYPE	SOURCE	UNIT	PAGE	NOTES
PC1		PCPGM	(20,1)				
	:1	ON	IB	D=1			
	:2	R	IB	D=0			
	:5	RUN	OB				
PC1.1		CONTRM	(20,2)				
	:1	ON	IB	D=1			
	:2	SINGLE	IB	D=0			
	:3	R	IB	D=0		1	PC1.1.1:1
	:5	RUN	OB				
	:6	MODP	OB				
PC1.1.1		OSC-SIN					
	:1	EN	IB	PC1.1:5		1	
	:2	TC	ITR	D=1.0			
	:3	AMP	IR	D=2.000			
	:5	O	OR	=AO1.1			=AO1.1 P
	:6	ERR	OB	=DO1.1			=DO1.1 P

Figure 2-31. Program List

2.5.4 Final Control

When the control system testing is complete and the plant is functioning satisfactorily, take the following actions:

- Check that all circuit boards are properly inserted in the bus backplane and that no screws are loose.
- Check that all terminal screws on connection units are properly tightened and that all grounding is effective.
- Check that all ribbon cable connectors are properly mated.
- Check that all cable bushings are installed properly to avoid cable wear.
- Check that no tools or debris from cable installation remain in the cabinet. Clean the cabinet.
- Use the command LSS to check the status of the executing units so that no unit remains blocked unintentionally.
- Make a final listing of the data base and PC programs to obtain correct documentation of the system, including all tuning parameters.
- Make a copy of the final PC programs and data base using DUAP. You can reload the dump using the command LOAP. For a description of the commands, see the manual *AMPL Configuration Advant Controller 400 Series*.

2.6 Implementation of Functions in Systems Already Operating

Enlargement of the system with additional functions differs from a "from-scratch installation." The main reason they differ is that the system is or has been in operation, which means that on-line/off-line aspects are important. The influence on the application program is also important. From these viewpoints, among other things, the most common additional functions are treated below.

Necessary Outfit

The following kit is normally a minimum requirement:

- Ordinary hand tools.
- Universal instrument, for example, digital multimeter.
- Test leads with 4 mm banana contacts and reducer contacts for a 2 mm test jack.
- Necessary parts of the documentation listed in Section 1.4, Related Documentation.
- Specific documentation enclosed at delivery.
- Advant Station 100 Series Engineering Station.

In more complex installations, which include closed loop control, some additional test equipment may be necessary/practical at tuning:

- Recorder with at least two channels.
- Access to an operator station facilitating object display trim curves and trend curves.

2.6.1 Servicing Tool

See Section 2.4.2.3, Connection of Engineering Station for a description of installing an engineering station, the main servicing tool. For detailed information about its use, see separate documentation.

2.6.2 Safety Regulations

The instructions given in Section 2.2.1, Safety Regulations are applicable in all situations when you work with an Advant Controller and associated equipment. Please read the instructions carefully. One instruction is highlighted:

DANGER

Work with care when supply voltage is applied in the system. The voltage in the cabinet can cause injury and can even kill a human being.

2.6.3 General Guidelines

Naturally, all design considerations given in Section 3.1, Design Considerations are also relevant to installation in a system already in operation. Among other things, you may want to reflect upon:

- Hardware, types and location.
- Type of carrier board eventually needed.
- Restrictions in function combinations.
- Software (program modules) needed to produce the total application you desire, for example, MasterBus 300, aimed at central operator station communication, which requires, in addition to the communication equipment, the central operator station software option.
- Interface to application program to be used.
- CPU load.
- Power supply requirement.
- Heat dissipation.

In Table 2-18, you can find information about whether or not a function can be implemented on-line.

On-Line/Off-Line

On-line means that all work can be carried out while the controller is in full operation. Because of the risk of making manual mistakes in such handling, and the possible severe consequences to the process controlled, it is recommended that you use this on-line facility restrictively.
The best method of working:

The system is stopped and the voltage supply is disconnected when a new function is installed.

Disconnection of the mains supply may have impact on dynamic information stored in the application program. For example counter/register content, integrator content and so on, will be lost if not secured by special considerations in the application program design. However this is general design considerations. The controller should manage "normal" mains supply interruptions.

Data Base Dimensioning

Table 2-18 notes the requirement of data base dimensioning.

Sometimes an on-line implementation presupposes that the data base is dimensioned for the additional function in advance, that is, at the original setup and start-up of the system, it is recommended that you plan for future enlargement. This is especially true for I/O boards, whose numbers are commonly enlarged during the commissioning.

When planning for future additional functions, for example, communication, also reflect upon the need of application functions attached, and the corresponding need for spares in the data base, for example, DAT, Data Set, MVI Set. These application requirements are not included in the statement of Yes or No concerning dimensioning of the data base in Table 2-18.

Do not overstress reserving spares. You can always redimension the data base. You must do it, however, off-line.

See below for a brief description of how to perform the dimensioning/redimensioning (look under the heading Dump of Application Program).

See the manual *AMPL Configuration Advant Controller 400 Series* for detailed instructions.

Dump of Application Program

If dimensioning of the data base is prescribed and no spare is left or if you need to implement new system software, the following guidelines apply.

Before installing a new additional function, dump the data base and PC program.
Use the dump command DUTDB for the data base.
Use the dump command DUTPT for the PC program.
When loading (LOTDB and LOTPT, respectively), you can select, among other things, REDIMENSIONING.

When the new function includes software (on a new program card), then the data base is dumped as object code. Use the command DUTDB. The PC program is dumped as source code. Use the command DUPCS.

You need only dump the data base as source code in one case - when the compatibility code for the data base is changed. This is normally performed with new releases and not with revisions.

Summary of Aspects

Table 2-18. Implementation of Functions in Systems Already Operating

Function/Equipment	Enlargement/Addition		Dimensioning of Data Base	Comments
	On-line	Off-line		
System software		X	Yes	
I/O module (S100, S800 I/O)	X		Yes	
I/O subrack (S100 I/O)		X	(Yes) (1)	
I/O unit (S400 I/O)	X		Yes	
Redundant processor module	X		No	It is recommended that you shut down the controller. See alternative instructions below.
Redundant regulator 5 V	X		No	
MasterBus 300 (all types)	X		No	
GCOM	X		No	
MasterFieldbus	X		(Yes) (1)	
Bus extension to S100 I/O		X	No	The data base for S100 I/O Bus Extension is pre-dimensioned. When a new I/O subrack is added in the system the corresponding data base instance must be set implemented.
Advant Fieldbus 100	X		Yes	
PROFIBUS-DP	X		Yes	
LONWORKS Network	X		Yes	
EXCOM	X		No	
Printer	X		No	
MasterView 320	X		Yes	
RCOM	X		No	
MVI	X		No	
Free-Programmable Communication	X		No	

(1) Braked (Yes) means that the requirement for dimensioning depends on the planned use of the equipment. For example, a new subrack meant to reorganize available boards requires no dimensioning

2.6.4 Additional I/O Boards

An I/O board which is not replacing a faulty board is delivered with a connection unit and connection cable. Replacement of faulty boards is described in Chapter 5, Maintenance.

For a detailed description of the connection and use of an engineering station and different dump/load commands, see separate documentation, *AMPL Configuration Advant Controller 400 Series*.

Preparation and Setup

I/O boards are normally grouped by type, so place the new boards with boards of the same type, if possible. This also applies to the connection unit. Note, however, that you must consider the power requirement and heat dissipation.

Route cables in accordance with the guidelines set forth in Section 2.2.6, Cable Routing in Cabinets.

Mount I/O functions in the following way:

1. Make a plan for the work to be done.
   - Read the General Guidelines above and apply the information.
   - Check for available spares in the data base. Use the commands DIMDB (check is possible, redimensioning is **not** possible on-line) or LDBD.
   - Determine I/O address to be used. Use the documentation of the data base or the delivery documentation, if applicable.
2. If no spares are available, make a dump of the controller system configuration and the application program. Engineering station dump command DUTDB and DUTPT.
3. Switch off the supply voltage to the control system (recommendation).

   NOTE

   Remember that the control function of the system ceases and the process being controlled is affected.

4. Screw the connection unit to the mounting bar at the rear wall of the cabinet. Ensure that the screws make contact with the tinned surface of the earth plane of the circuit board for effective grounding.
   It is also of the utmost importance that you tighten the screws properly to give a reliable earth connection. See Figure 2-32.
5. Screw the board connector with connection cable to the desired slot in the subrack and connect to the connection unit in the opposite end. See illustration in Figure 2-33.
6. Ensure that there is no tension in the wiring, especially if it may be necessary to swing the hinged subframe for the I/O subrack.
7. Set the I/O address and other functional jumpering on the board.
   Addressing and functional measures like jumpering are described in the reference manual *S100 I/O Hardware*.

8. Provide access to the desired position in the subrack by loosen the locking bar in front of the boards.
9. Insert the I/O board carefully in the subrack without reaching the rear plane contacts. Ensure that the board slides in the guides in the subrack.

CAUTION

At insertion, **use the grounded wristband**.

10. Push in the new board quickly and decisively
11. Ensure that the board contacts mate properly with the contacts in the rear plane. Screw the locking bar in place.
12. Connect the process cables to the connection unit. Reflect upon all installation rules regarding cable routing and grounding.
    As an alternative, first make a functional verification when the process is not connected. Then connect.

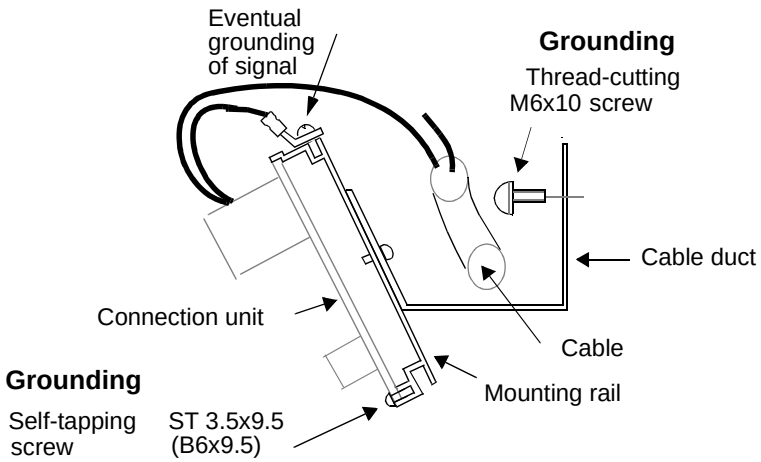

Figure 2-32. Grounding of Connection Units

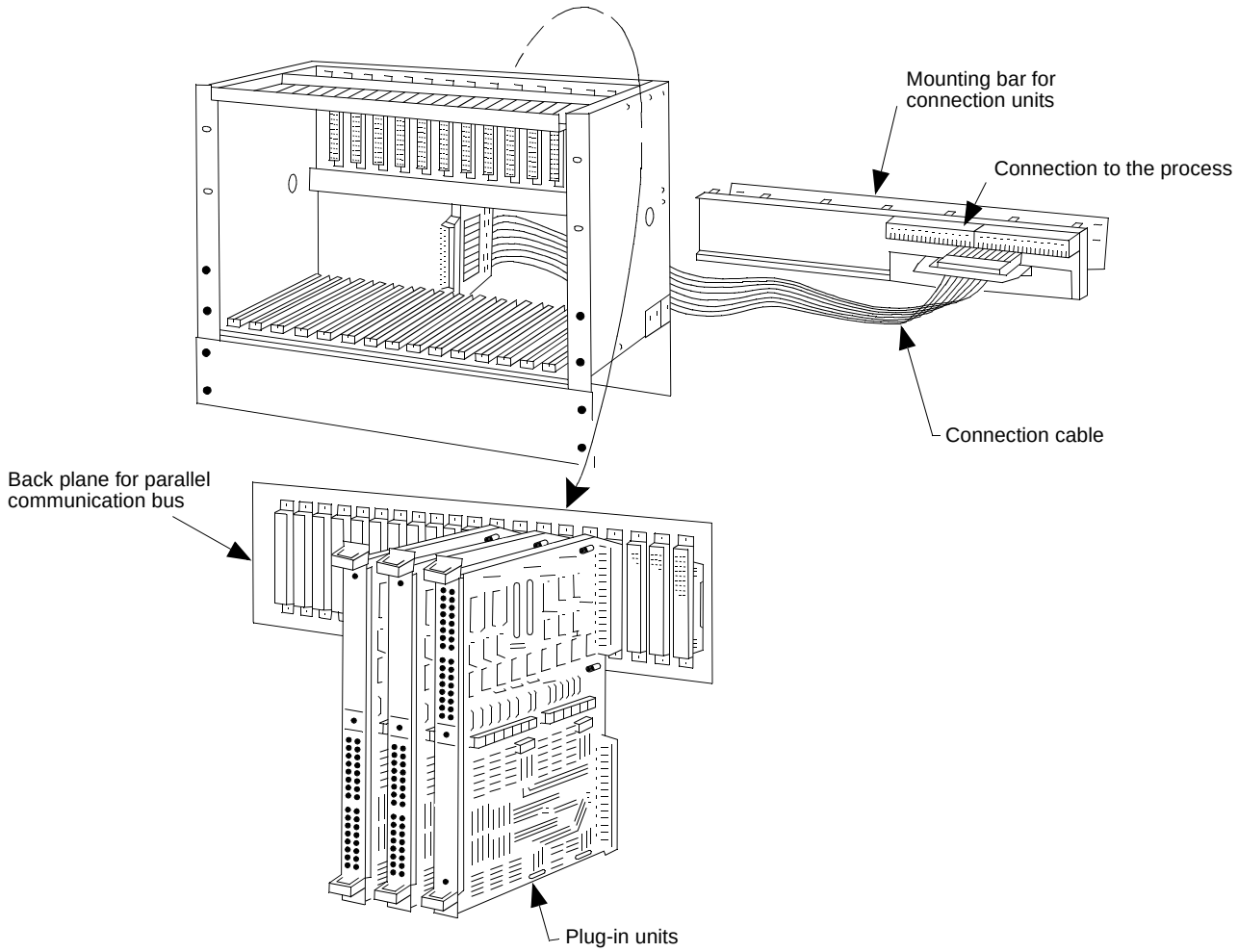

Figure 2-33. I/O Subrack

Start-up

The start-up is carried out in different ways, depending on the main working mode, on-line or off-line.
If a board is **added on-line**, the different I/O channels are put into operation as the adequate data base is created and the application functions are built and started (deblocked).

You can, of course, switch off the power supply during the installation work.
Then switch on the power supply, keeping the start mode selector on the processor module in 1 (AUTO) position. The system is restarted and in full operation apart from the additional board. The different I/O channels are put into operation as the adequate data base is created and the application functions are built and started (deblocked).

If the board is **added off-line** because REDIMENSION of the data base was necessary (no spares available), the following start-up sequence is applicable.
A data base dump DUTDB and a PC program dump DUTPT are presupposed.

1. Follow the general instructions in Section 2.6.7, Power-up Ahead of Program Loading.
2. Perform the controller system configuration:
   a. Load the data base dump, LOTDB and REDIMENSION.
   b. Create the additional data base, DIMDB.
   c. Perform data entry of additional data base, MDB.
   d. Dump and load (compress) the data base, DUTDB/LOTDB.
   e. Load the PC program dump, LOTPT, and REDIMENSION PC program tables, if necessary.
3. Perform configuration/application building:
   a. Populate the additional data base, MDB.
   b. Enter and edit PC program, if relevant.
   c. Dump and load PC programs, DUTPT/LOTPT.
4. Back up the entire RAM, DUAP.
5. Disable working mode CONFIGURATION, DICONFIG.

   In addition to those indications obtained at power-up:
   – All red LED F (Fault) on S100 I/O board fronts are switched off.
   – The yellow LEDs INIT and INHIB on S100 I/O Bus Extenders DSBC 174/ DSBC 176 board front are switched off.
6. The processor module changes over and indicates P1 (working mode OPERATION).

The system is now started and ready for operation.
Perform the final stages, which include start of executing application programs, successively, especially those application programs which are affected by the additional I/O board. Do one PC program at a time.

WARNING

When the application program is started, the process to be controlled is influenced.

The significant engineering tool commands you use are:

1. DIsable Build Mode, DIBM PCx
2. DeBLock, DBL.

Verification

Make functional tests, including process functions, applicable.

2.6.5 Extension with Redundant Processor Module

You can install an additional processor module at any time for redundancy.
Normally, a dedicated slot in the controller subrack, module position 2, should be spare.

The processor modules must be coordinated. Do the full identification by reading a label on the printed circuit boards. Then shut down the system and withdraw the existing processor module, if this information is not otherwise noted. The additional processor module must have the same or higher revision number. The document *Release Notes* included in the Delivery Binder states which processor modules can work in a redundant pair and which can not. For example, you can not mix 8 and 16 Mbyte versions.

Despite the option to install an additional processor module on-line, it is recommended that you do the work keeping hazard to a minimum. The best way to minimize hazard is to shut down the controller. Reflect on these points:

- Process safety
- Need to test the newly installed equipment
- Need to test earlier logic and connectors not utilized in the existing equipment.
  Note possible years of operation and environmental influence.

Power supply redundancy is sometimes introduced at the same time. In that case, system shut-down and power supply disconnection become compulsory.

Extension On-line

1. Check module identities.
2. Check module position 2 (item designation 108, see Appendix D, Item Designations) for visible damage, dust, etc.
3. Set start mode selector on the new processor module in STOP position.

CAUTION

Do not forget the general rule: Reflect on the danger of ESD. Use the grounded wristband when handling circuit boards.

4. Insert the new module in position 2.
   Check the display on the module front, which indicates -3 (STOPPED) after a few seconds.
5. Set the start mode selector on the new processor module in the same position as the existing processor module.
6. Push the ENTER button on the new module.
   Check the display. A correct installation gives the following indications in sequence:
   a. b2 (UPGRADING), b1 STANDBY) after < 90 sec.
   b. LEDs DUAL on both processor modules light up.
7. It is recommended that you perform a function test. Manual changeover is described in Chapter 5, Maintenance.

Extension Off-line

1. Shut down the system by setting the start mode selector on the existing processor module in STOP position. The display shows -3.
   The entire process control is shut down!
2. Check module identities. If the existing module is withdrawn, insert again.
   Keep the start mode selector in 2 (STOP) position.
3. Check module position 2 (item designation 108, see Appendix D, Item Designations) for visible damage, dust, and so on.
4. Set start mode selector on the new processor module in 2 (STOP) position.

CAUTION

Do not forget the general rule: Reflect on the danger of ESD. Use the grounded wristband when handling circuit boards.

5. Insert the new module in position 2.

There are alternative ways of continued installation with respect to safety.
Steps 6 - 9 describe a normal installation.
Steps 10 - 16 describe an installation with increased safety by checking basic changeover functionality in working mode CONFIGURATION, without affecting the process controlled.

---------- **Normal Installation** ----------

6. Set the start mode selector on the existing processor module in 1 (AUTO) position.
   Push the ENTER button. The display shows P1.
   Process control starts.
7. Set the start mode selector on the new processor module in the same position as the existing processor module.
8. Push the ENTER button on the new module.
   Check the display. A correct installation gives the following indications in sequence:
   a. b2 (UPGRADING), b1 STANDBY) after < 90 sec.
   b. LEDs DUAL on both processor modules light up.
9. It is recommended that you perform a function test. Manual changeover is described in Chapter 5, Maintenance.
   ---------- **end** ----------

--------**Installation with Increased Safety**------

10. Set the start mode selector on the existing processor module in 1 (AUTO) position.
11. Connect an engineering station to the existing processor module and, after the connection session, give the command ECONFIG. The display on the processor module front shows P2 CONFIGURATION.

12. Set the start mode selector on the new processor module in the same position as the existing processor module.
13. Push the ENTER button on the new module.
    Check the display. A correct installation gives the following indications in sequence:
    a. b2 (UPGRADING), b1 STANDBY) after < 90 sec.
    b. LEDs DUAL on both processor modules light up.

    The left processor module is now PRIMARY while the new one is BACKUP.
14. Make a basic function test. Manual changeover is described in Chapter 5, Maintenance.
15. Give the command DICONFIG. The resulting working modes are:
    PRIMARY P1 OPERATION
    STANDBY start in b2 UPGRADING and then transition to b1 STANDBY

    The command DICONFIG causes the process control to start!
16. It is recommended that you perform a full scale function test, that is during normal process control. Manual changeover is described in Chapter 5, Maintenance.
    ----------**end**----------

2.6.6 Enlargement of the System Software

Below you can find instructions on how to change a program card with the system software to a variant with another assembly of program modules, that is another functional assembly.

Revision of system software is dealt with in the same way.

An exchange procedure is assumed. After reception of a new program card, the used one is returned to the sender.
For a detailed description of the connection and use of an engineering station and different dump/load commands, see separate documentation, *AMPL Configuration Advant Controller 400 Series*.

Preparation and Setup

1. The new SW is ordered.
   A new program card is delivered, including the desired assembly of program modules (or the new revision).
2. Enclosed at delivery, you will find a release identification with a compatibility code. (See Section 1.7.1.1, Version Designation.) The compatibility code determines whether you must use data base source code to re-create the application with new system software or if other alternatives exist.
3. Check the system software compatibility code in the running system.
   This is visible on the engineering station display screen when you log in on the target system, or it is displayed with the help of the command SHTARG.

4. Make a suitable dump of the application program:
   - Always make a source code dump of the PC program (DUPCS).
   - If there is no change in the system software compatibility code, make a dump of the total data base (DUTDB).
   - If there is a change in the system software compatibility code, make a source code dump (DUDBS).
     Source code is always an option, but it is more time-consuming.
5. Shut down the controller (and thereby the entire process control) by switching the power supply off. Use the circuit breaker S1 on the power switch unit(s) for mains A and mains B. Do not disconnect mains C.
6. Extract the program card on the Processor Module PM511 located in the controller subrack. Use the release push button.

CAUTION

Do not forget the general rule: Reflect on the danger of ESD. Use the grounded wristband.

7. Insert the new program card.

CAUTION

At insertion, **use the grounded wristband**.

Start-up

Suitable data base and PC program dumps, per point 4 in the setup instructions above, are presupposed.
The following instructions do not include any utilization of the new software functionality, but only aim at restoring the "old" application. Enlargement of the application may require redimensioning of the data base and the PC program tables as well. For relevant information on these topics, look elsewhere in this manual or see separate documentation.

1. Follow the general instructions given in Section 2.6.7, Power-up Ahead of Program Loading.
2. Perform the controller system configuration:
   a. Load the data base dump, LOTDB or TRDBS, as applicable.
3. Perform configuration/application building:
   a. Load the PC program dump, TRPCS.
4. Back up the entire RAM, DUAP.
5. Disable working mode CONFIGURATION, DICONFIG.

   In addition to those indications obtained at power-up:
   - All red LED F (Fault) on S100 I/O board fronts are switched off.
   - The yellow LEDs INIT and INHIB on S100 I/O Bus Extenders (DSBC 174/DSBC 176) board front are switched off.

6. The processor module changes over and indicates P1 (working mode OPERATION).

The system is now started and ready for operation.
Perform the final stages, including start of application program execution, successively.

WARNING

When the application program is started, the process being controlled is influenced.

Significant engineering tool commands to use are:

1. DIsable Build Mode, DIBM PCx
2. DeBLock, DBL.

Verification

Make functional tests, including process functions, applicable.

2.6.7 Power-up Ahead of Program Loading

1. Set the mode selector on Processor Module PM511 in 3 (CLEAR) position.
   Repeat for an eventually redundant processor module.
2. Switch on the circuit breaker S1 on the power switch unit(s) in any order.
   (If this circuit breaker has been used to switch off the power supply to the system.)
   Several power switch and distribution units can exist in the controller cabinet or in adjacent I/O cabinets.
3. Check for the following positive indications of a successful power-up:
   - Distribution Unit SX554 — green LED LIVE (24 V)
   - Regulator SR511 — green LED 5 V
   - Backup Power Supply SB511 (or 510) — green LED RUN
   - S100 I/O Bus Extenders DSBC 174 or DSBC 176 — green LEDs RUN and DC OK
   - Processor Module PM511 — green LED RUN, display ind. P2
     (Indicating working mode CONFIGURATION.)
   - Redundant Processor Module PM511 (BACKUP) — green LED RUN, display ind. b2...b1
     (The backup unit starts in working mode b2, UPGRADING. After a while (<90s) there is a transition to b1, STANDBY).
     If a redundant processor module is available, and if both modules' start mode selectors are set in 3 (CLEAR) position, then the left processor module will be PRIMARY while the right processor module will be BACKUP.
     Chapter 4, Runtime Operation explains alternative ways of starting.

   See Figure 2-25.

There are also some negative indications, for example:

– S100 I/O boards — red LED F (Fault)
(Indicating that the boards are not implemented.)

– S100 I/O Bus Extenders DSBC 174or DSBC 176 — yellow LEDs INIT and INHIB
(Indicating that the boards are not implemented.)

4. If a LAN communication module CS513 exists, it gives the following indications:

   – Communication module CS513 — green LED RUN; ylw LED TX/LAN (flash); ylw LED RX (flash)
   (Indicating a successful automatic configuration of the LAN communication.)

5. The target system is now ready for configuration or program load by connecting the engineering station directly to the processor module. If redundant processor modules connect to the primary module. Configuration is also possible via the network if applicable and desirable.

6. Finally, set the mode selector on Processor Module PM511 in 1 (AUTO) position. Repeat for any redundant processor module.

NOTE

Do not push the ENTER button!

The controller remains in working mode CONFIGURATION.

If correct indications fail to appear, trace the fault in accordance with instructions in Section 5.5, Fault Finding and User Repair.

Chapter 3 Configuration/Application Building

3.1 Design Considerations

This section tells you some of the things you need to think about during configuration and application building.
This follows the primary structure outlined in Section 1.7, Product Overview, however, some subsections have been added. The information is given as concisely as possible under the following headings, as relevant.

- **Appropriate Hardware and Software**
  What is necessary to achieve a function.
- **Interface to Application Program**
- **Guidelines**
  Typical information:
  - Location of hardware
  - Recommendations
  - Limitations.

For information on the possible number of instances, please see Section 3.2, Technical Data Including Capacity & Performance.

3.1.1 Product Structure

The product structure deals primarily with general functional modularization. In that context, questions regarding number of supported functions, possible combinations of functions, and so on, are relevant. For the answers to such questions, see Section 3.2, Technical Data Including Capacity & Performance.

Regarding the realization of functions, please note that the hardware structure and the software structure of the product differ. A functional option may require extra hardware, but the software is included in the basic program module. Or an optional program module may support several functional options (each with a dedicated hardware).

3.1.2 General System Utilities

Appropriate Hardware and Software

Most functions and equipment described as General System Utilities are included in the basic unit of a controller (smallest unit to be ordered) loaded with the basic system program. You can enlarge this platform further with alternatives and options.

3.1.2.1 System Clock

Appropriate Hardware and Software

No extra hardware or software is needed.
To achieve external synchronization, the "minute pulse" is connected to the System Status Collector TC520, see Figure 3-1.

Synchronization input electrical data is given in Section 3.2.1.4, System Clock.

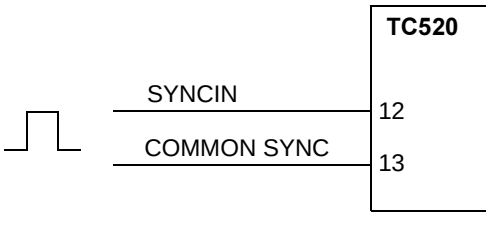

Figure 3-1. External Synchronization of System Clock

3.1.2.2 Run/Alarm Relay

Appropriate Hardware and Software

No extra hardware or software is needed.
The System Status Collector TC520 is used according to Figure 3-2.
Contact data: see the module description in Appendix A, Hardware Modules.

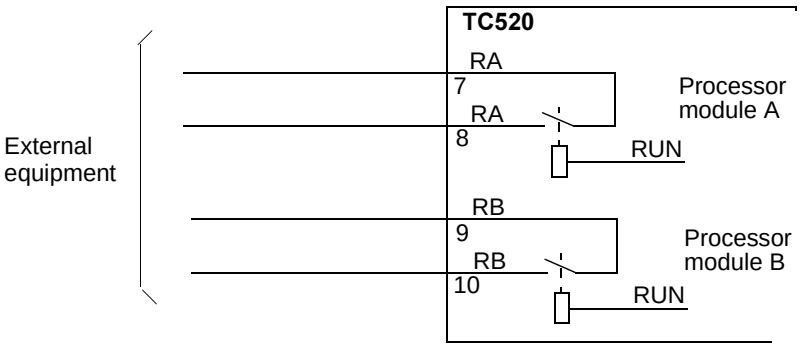

Figure 3-2. Run/Alarm Relay Connection

3.1.2.3 Additional Supervisory Inputs

No extra hardware or software is needed.
The Supervision Unit TC520 is used according to Figure 3-3.
Electrical data: see the module description in Appendix A, Hardware Modules.

Application: see Section 2.2.8, Controller, heading Electric Installation.

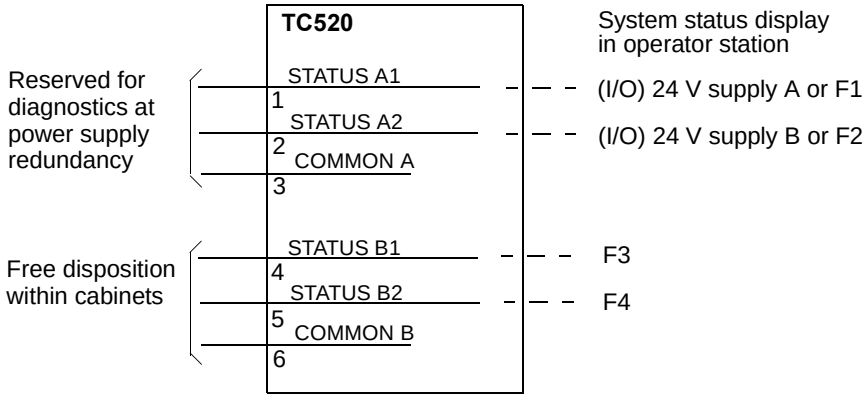

Figure 3-3. Connection of Additional Supervisory Inputs

Figure 3-4. Power Supply Terminal Settings

Terminal	Setting
F1	"NO". (Because normally the signal "I/O 24V A error" is connected to digital input A1 of TC520 (1)). ("YES" if there is a user defined signal connected to digital input A1 of TC520 (1)).
F2	"NO" if the signal "I/O 24V B error" is connected to digital input A2 of TC520 (1). "YES" if there is a user defined signal connected to digital input A2 of TC520 (1).
F3	"YES" if there is a user defined signal connected to digital input B1 of TC520 (1).
F4	"YES" if there is a user defined signal connected to digital input B2 of TC520 (1).

(1) See sections "Power Supply modules" and "TC520" in the Data Base Elements Advant Controller 400 Series - Reference Manual.

Note that input A1 may be used **either** for supervision of 24V A in I/O subracks **OR** user defined function F1.

For supervision of 24V A in I/O subracks, set terminal IO24VA to "YES".

For supervision of user defined function F1, set terminal F1 to "YES".

Input A2 may be used **either** for supervision of 24V B in I/O stations **OR** user defined function F2.

3.1.2.4 Backup of Application Program

Appropriate Hardware and Software

Table 3-1. Backup of Application Program, Hardware and Software

Function	Submodule	Submodule carrier SC		Program module	Peripheral	Comments
		510	520			
Backup of application program	MB510	X	X	QC07-BAS41		A PCMCIA card of suitable memory size must also be used

Guidelines

- No restrictions in location of submodule and submodule carrier in controller subrack. Use leftover slot on a submodule carrier if possible.
- Advant Station 130 Engineering Station and AdvaBuild On-line Builder supports the preparation of flash cards (PCMCIA) with application dumps.
- *AdvaBuild On-line Builder User's Guide* describes the work procedures in detail.
- You can find an overview regarding work procedures in Section 5.7.2, Backup of Application.

3.1.3 Power Supply

Appropriate Hardware

Alternative power supply systems are available. When you order, you can select a suitable alternative. Do not be concerned with number of included parts, but rather the number of power supply units. This number is calculated with respect to the actual number of I/O subracks. See Table 3-2 below. Normally, you do not have to deal with current consumption calculations. There are, however, occasions with special requirements, special designs, and so on, when detailed information regarding current consumption is valuable. Please find a description under the heading Guidelines, below.

Guidelines

- For a summary of the main requirements of the plant supply from a planning viewpoint, see Section 2.1, Site Planning Environment.
- Auxiliary equipment in the controlled system is normally powered separately from the control system power supply.
- Heavy current on/off loads are **always** powered separately.
- An exception to the second point above is analog outputs, for example 0-10 V, 4-20 mA, which are powered by the system power supply. Please note, galvanically isolated analog outputs are powered separately.
- You can use the system power supply for transducers provided that:

– the need for current is small

– there is idle capacity in the available power supply units (see **Current Consumption**)

– the transducer is grounded directly in the control system chassis.

Number of Power Supply Units

In Table 3-2, you can find six alternatives for equipment configuration. Power supply needs are divided up into available power supply units rated 25 A and 10 A.
Up to fully equipped subracks is assumed.
Current at nominal 24 V is given, for example, 25 A.

For special utilization of the power supply units, you are advised to calculate the current consumption.

Table 3-2. Rules for the Calculation of Number of Power Supply Units

Alternative Standard Configuration	Max. Power Supply Requirement
Alternative 1	
Controller subrack	25 A
Alternative 2	
Controller subrack I/O 1 subrack	25 A
Alternative 3	
Controller subrack I/O 1 subrack	25 A
I/O 2 subrack	10 A
Alternative 4	
Controller subrack I/O 1 subrack	25 A
I/O 2 subrack I/O 3 subrack	25 A
Alternative 5	
Controller subrack I/O 1 subrack	25 A
I/O 2 subrack I/O 3 subrack	25 A
I/O 4 subrack	10 A
Alternative 6	

Table 3-2. Rules for the Calculation of Number of Power Supply Units

Alternative Standard Configuration	Max. Power Supply Requirement
Controller subrack I/O 1 subrack	25 A
I/O 2 subrack I/O 3 subrack	25 A
I/O 4 subrack I/O 5 subrack	25 A

Considering the cost of spare parts, a uniform type of power supply unit (25 A) is sometimes profitable.

At redundancy, the number of units extracted from the information in Table 3-2 is doubled.

Current Consumption

As a rule, an SA168 (25 A d.c.) supply unit is used to supply equipment with one I/O subrack. If the Advant Controller 450 has another I/O subrack, it is equipped with another SA162 (10 A d.c.) in cabinet 2. If the system has three I/O subracks, the extra supply unit is replaced by an SA168. Please note that the supply unit types given are for 230 V a.c. mains supply. Corresponding types for 120 V a.c. mains supply are available.

The current consumption with 24 V is obtained in the following way:

$$I_{tot} = I_{24V} + 0.37 \times I_{5V}$$

where I_{24V} = current consumption 24 V, obtained from Table E-1 - E-3 in Appendix E, Current Consumption and Heat Dissipation.

I_{5V} = current consumption 5 V, obtained from Table E-1 - E-3 in Appendix E, Current Consumption and Heat Dissipation

0.37= conversion factor.

This current is used as output current for analog outputs in addition to supplying the internal electronics.

See Table E-1 - E-3 in Appendix E, Current Consumption and Heat Dissipation for information about the current consumption of the available units in Advant Controller 450. These tables hold typical data relevant to the actual type of calculation. It also holds power dissipation data to be used in calculating the heat generated in a cabinet. You can use the tables as a form when you make your own calculation.

The total static and dynamic loads may under no circumstances exceed 100 % of the capacity of the supply unit. As all current consumption information is typical and not an "absolute maximum," it is recommended that you not load the supply unit beyond 90 % of its capacity, including all static and dynamic loads.

When calculating the current supplied to SA162/168 units, use 0.85 as the efficiency factor of the units.

Fusing in Distribution Board

The system is protected with adequate internal fusing. In addition to fusing distributed to different apparatus, there are common miniature circuit breakers in the power switch and distribution units in the cabinets (see the terminal diagram form for the actual power supply system).

The superior distribution board fusing protects the equipment with respect to:

- Internal fusing in the Advant Controller
- Rated current of connected equipment
- In-rush current at power switch-on
- Need to protect the power supply cables to the equipment installed.

For a guide to dimensioning the fusing, see below.
When necessary, you can make a more accurate current consumption calculation to obtain exact data for fusing. This calculation should focus on the actual number and type of circuit boards in the different subracks.

a.c. Network A/B

Table 3-3. Distribution Board Fusing, a.c.

No. of power supply units (SA16X) connected to the same line	Distribution board fusing (Recommended)			
	230 V a.c.		120 V a.c.	
	Fusable link	MCB(1)	Fusable link	MCB(1)
1	16 A	K16A	20 A	K25A
2	16 A	K16A	20 A	K25A
3	16 A	K25A	25 A	K32A
4	20 A	K32A	30-35 A	K50A
5	25 A	K32A	35 A	K50A
6	25 A	K50A	35 A	K50A

(1) MCB = Miniature Circuit Breaker

The in-rush current at power switch-on must be considered at the fuse dimensioning. Consequently, you must include redundant power supply units (connected to the same line) in the calculation of number of units. Normally, redundant power supply units are connected to separate lines.

a.c. Network C

To reflect the in-rush current and the current rating for the applied power switch and distribution unit (SV54x), the distribution board fusing should be in the range 10 - 20 A.

d.c. Network A/B

For practical reasons, the fusing at d.c. supply is based on the number of included I/O subracks. Here, out of necessity, an almost "worst case" view is taken.

With respect to the actual power supply distribution within the Advant Controller installation and planned distribution board fusing, please use the figures in Table 3-4 to calculate a suitable distribution board fusing.

The fuse dimensioning current in the table is settled with respect to:

- lowest supply voltage (19 V/38 V for 24 V and 48 V d.c. systems, respectively)
- efficiency factor of the power supply unit SD150 (ca 0.75)
- margin (1.25 x calculated load current).

The minimum fuse rating is determined by the miniature circuit breakers in the actual power switch and distribution units.
At 24 V d.c., the minimum value is normally 50 A. At 48 V d.c., the minimum value is 25 A.

Table 3-4. Data to Settle the Distribution Board Fusing, d.c.

Item	Fuse Dimensioning Current (Recommended)	
	24 V d.c.	**48 V d.c.**
Controller subrack	19 A	9.5 A
I/O subrack	18 A	9 A
Field equipment	(1)	(1)

(1) If a power supply unit for field equipment, type SD150, is included, please use a formula to calculate the Fuse Dimensioning Current.

Fuse Dimensioning Current (FDC)

General:

FDC = Load effect · 1/Efficiency factor · 1/Lowest supply voltage · Margin

At 24 V d.c mains supply:

FDC = Load effect · 1/0.7 · 1/19 · 1.25

At 48 V d.c. mains supply:

FDC = Load effect · 1/0.7 · 1/38 · 1.25

In addition, these formulas are also applicable when a detailed current consumption (and thus the load effect) for a subrack is available and when it should be transformed into fuse dimensioning current. The figures in Table 3-4 are almost "worst case."

The in-rush current at redundant power supply units SD150 connected to the same line is normally no problem and consequently, you should not consider it when dimensioning the distribution board fusing. In continuous operation, they will share the load.
A more practical installation of redundancy uses duplicated line voltages. Then identical fusing according to the above table and rules are realized.

Some application examples for the d.c. mains supply are given in Figure 3-5.

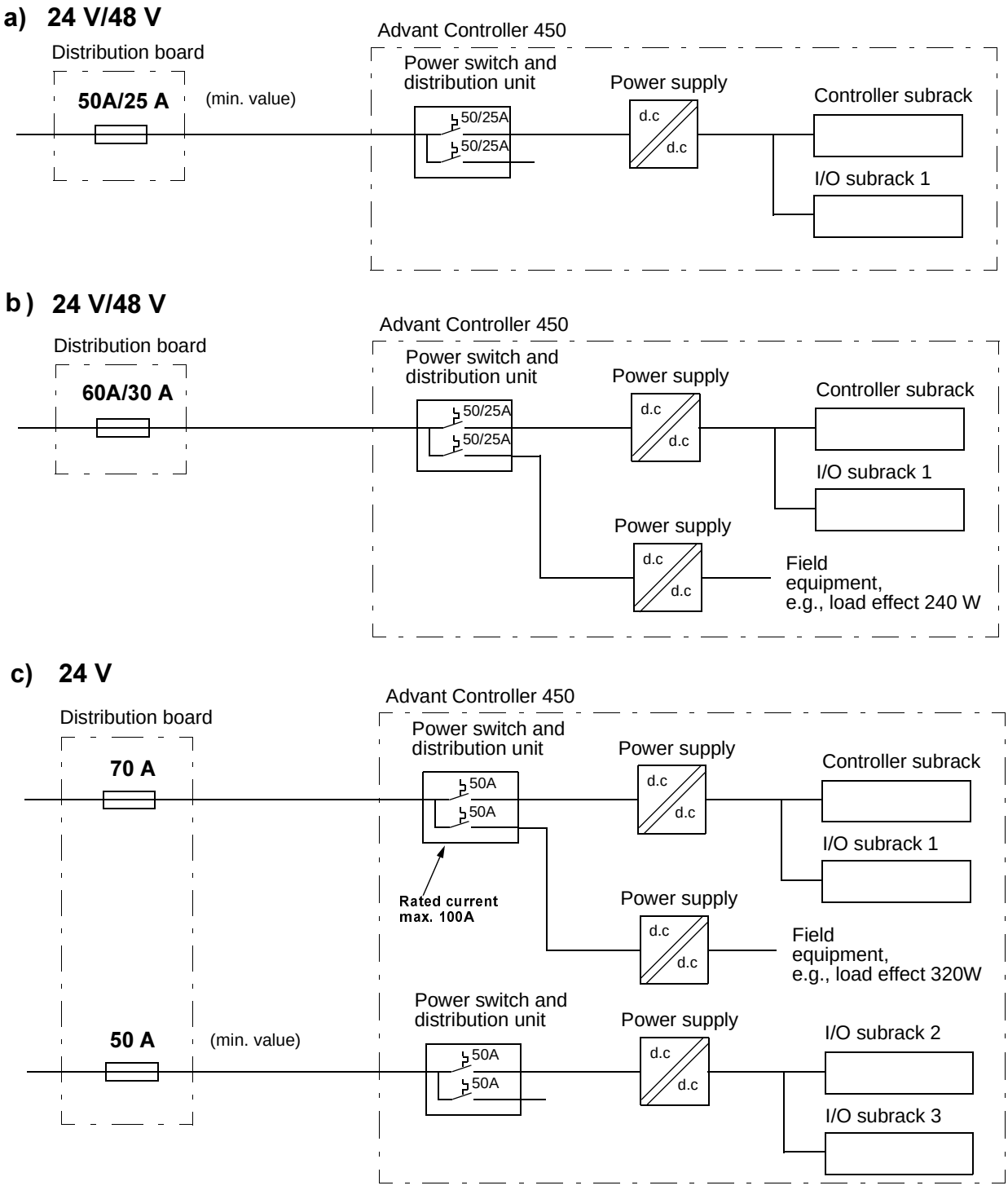

Figure 3-5. Examples of Distribution Board Fusing, d.c.

Uninterrupted Power Supply, UPS

In the event of a power failure, the controller is shut down safely. During the dead time, the current supply of the RAM and the system clock is backed up by a battery package. To prevent shut down, you can feed the controller by a UPS.
In addition, make the actual load (VA, W) considerations with respect to information given in Table 3-5 and Table 3-6 when a UPS is dimensioned. Firs half period peak values given are close approximations at 0.2 ohm net impedance, 230 V, 50 Hz. Corresponding figures at 0.1 ohm net impedance, 115 V, 60 Hz are obtained by multiplying with a factor 1.5.

Table 3-5. Requirement on UPS from Voltage Supply Unit SA162

Data	Value
First half period peak value at switching on	60 - 80 A
cos φ	>0.7
Crest factor ($^{\text{peak current}}$ / $_{\text{RMS current}}$)	<2.6

Table 3-6. Requirement on UPS from Voltage Supply Unit SA168

Data	Value		
	Number of units		
	1	2	4
First half period peak value at switching on	25 A typical 120 A worst case	45 A typ. 160 A wc	80 A typ. 200 A wc
cos φ	>0.7		
Crest factor ($^{\text{peak current}}$ / $_{\text{RMS current}}$)	<2.0		

3.1.4 Process Interface

Appropriate Hardware and Software

No extra software is needed, the basic system QC07-BAS41 is sufficient.

No extra hardware is needed besides the desired I/O unit if:

- Spare slot in an I/O subrack is available (S100 I/O)
- MasterFieldbus communication is available (S400 I/O)
- Advant Fieldbus 100 and an S800 I/O station is available (S800 I/O).

Supported I/O boards (S100 I/O), I/O units (S400 I/O) and I/O modules (S800 I/O) are listed in Section 1.7, Product Overview. Besides the board/unit type designation, you can also find information about suitable connection units and internal cables in that section. Further guidelines are given below.

Interface to Application Program

Each board/unit/module is normally represented by a **data base element**. The same applies to the individual channels of the board/unit/module. For a digital input board in the S100 I/O, there is a superior DI board element and 32 Digital Input (channel) elements.
For an S400 I/O unit or S800 I/O module, there is a corresponding superior element defining the unit (AX unit, DX unit) or module. Comparing the different I/O system S100 I/O, S400 I/O and S800 I/O the individual channel elements are almost identical.

The superior elements are created by the user/configurer. As a result, the relevant individual channel elements appear automatically.

Some board types listed below have one or several **PC elements** as the interface to the application program.

Pulse Counter and Frequency Measurement Module DP820:

Data Base Element DP820 is used to configure the module.

The following PC elements are used for communication with the module:

– DP820-I Read values from one channel

– DP820-O Issues commands for one channel.

Positioning Board DSDP 140A.

The following PC element are used for communication with the board:

– Pos -A Positioning - Analog control

– Pos -L Positioning - Length

– Pos -O Positioning - On/off.

Pulse Counter and Frequency Measurement Board DSDP 150:

Three different PC elements, COUNT-DP, FREQ-SP, and FREQ-MP, are used for varying applications together with the board DSDP 150.

Pulse Counting and Frequency Measuring Board DSDP 170:

The following PC elements are used for communication with the board.

– PCU-COM Starts and supervises DSDP 170

– PCU-I Reads values from channels

– PCU-O Sets parameters and issues commands

– PCU-SS Gathers data from several channels simultaneously for up to five boards.

Weighing boards DSXW 110 and DSXW 111:

The following PC elements are used for communication with the boards.

– SCALE Provides the logical interfacing between PC programs and the local weighing function on the weighing board

– SCALEDOS Provides the logical interfacing between PC programs and the local dosing function on the weighing board.

With the given DB element, PC element and board type as a reference, you can find functional and hardware descriptions in:

- *Data Base Elements Advant Controller 400 Series Reference Manual*
- *PC Elements Advant Controller 400 Series Reference Manual*
- *S100 I/O Hardware Reference Manual.*

Guidelines

The following sections, Section 3.1.4.1, S100 I/O System and Section 3.1.4.2, S400 I/O System, guide you in selecting suitable I/O for an application and some design rules.
By way of introduction, the question of centralized I/O or distributed I/O is discussed.
A combination of centralized I/O and distributed I/O can often be an appropriate solution.

Centralized I/O

The traditional method of building control equipment with a central assembly of all electronics in the control or equipment room is still the most common. There are several reasons for this:

- Not all processes are suitable for distribution of I/O functions. In some cases, safety or environmental requirements with respect to equipment and maintenance personnel may make a process unsuitable.
- The geographical spread of the process is often limited.
- It may be necessary to supplement a central operator's function (including a display screen) with a conventional panel function independent of the control system.
  For example, a panel instrument in a current loop showing a process measured value which is to be placed in the central control room.
- The control system interacts closely with central switch gear for control of the motor supply.

Distributed I/O

Cables and wiring represent a large part of the costs of a control system. It is, therefore, an obvious advantage if a communication bus can transport a large number of signals between an Advant Controller 450 and a distributed I/O unit and have separate signal leads only between the I/O unit and the process. The wider the process is dispersed geographically, the more profitable distributed I/O becomes.

The option to supplement the distributed I/O function with independent small controllers for fast logic control makes this type of system configuration even more attractive economically. The control in the distributed controller can, in addition, be integrated with the Advant OCS.

In connection to a revamp, you can locate distributed I/O units in an existing marshalling area as interface between an old installation and a new control system.

3.1.4.1 S100 I/O System

Guidelines - General

There are certain restrictions in number of I/O subracks, number of I/O boards and number of signals of different categories. Please see Section 3.2, Technical Data Including Capacity & Performance.

There are no restrictions on location and mixing of boards of different categories in an I/O subrack. There are, however, some production rules to facilitate ordering and rapid delivery. See Section 2.1.4, Standard Layout and Disposition of Cabinets.

When you design a control system, it is desirable to leave some spare capacity. It is practical to have approximately 10% to 20% of the channels as spares. The same recommendation is valid for spare space in subracks.

You can add new I/O boards on-line provided there are spare items in the data base. Reflect the need when you make the data base dimensioning.

Guidelines - Analog Inputs

General

With current signals and series coupling of loads, the total resistance may not exceed the resistance through which the sensor output can be driven.

The referred type designations below are valid to circuit board, connection unit and internal cable, respectively.

DSAI 130
DSTA 131, DSTK 221L3
DSAI 130A
DSTA 131, DSTK 227L3

Differential inputs for applications with considerable accuracy requirement. Common Mode Voltage up to 100 V (50 V DSAI 130A) is acceptable. These are used when it is necessary to ground measurement circuits at different places in the system. This means you can use transducers which require grounding of the signal zero. Fusing occurs in groups at six fuses which can be used for an optional number of channels.

DSAI 130
DSTA133, DSTK 221L3
DSAI 130A
DSTA 135, DSTK 221L3

16 differential wit individually power limit transducer power supply for applications with considerable accuracy requirements. Common Mode Voltage up to 100V (50V DSAI 130A) is acceptable.

DSAI 130
DSTA 137, DSTK 221L5

DSTA 137 provides object oriented connection to DSAI 130 and DSAO 130. Regarding input features please refer to DSAI 130 using DSTA 131 above. No fusing of power supply distribution. However, individual protection per channel is available by means of a PTC resistor.

DSAI 130A

DSTA 138, DSTK 221L5

DSTA 138 provides object oriented connection to DSAI 130A and DSAO 130A. Regarding input features please refer to DSAI 130A using DSTA 131 above. No fusing of power supply distribution. However, individual protection per channel is available by means of a PTC resistor.

DSAI 133
2x DSTA 002A, DSTK 222L3

DSAI 133A
2x DSTA 002B, DSTK 222L3

32 single ended and unipolar current inputs, which means that the transducers or their power supply can be grounded only within a geographically limited area, where the ground potential is the same as the system ground.

NOTE

There are two connection units due to the number of input channels.

In a redundant configuration two DSAI 133 can be connected to the same connection units. The redundant inputs are handled by the application programmer in the same way as the other analog inputs.

DSAI 146

DSTA 145, DSTK 229SL3

A design for three-wire connected Pt 100 transducers, which compensates for the length of lead, provided that the lead resistance is the same for the cable conductors.
A conductor break in a transducer does not affect other measurement channels.

DSAI 155A
DSTA 156, DSTK 160

Used for **grounded** thermoelements. Earth the channels not connected to transducers.

NOTE

You can use only one type of thermoelement per board.

DSAI 155A
DSTA 156B, DSTK 225SL3

Used for **grounded** and **non-grounded** thermo elements. Earth channels to which transducers are not connected.

DSTA 155, DSTA 155P

Placed out in the process to minimize the length of expensive compensation cable from thermoelements. The unit measures the temperature at the cold junction. Locate it at a place with small temperature variations and, naturally, at a place conveniently located with respect to all of the transducers connected to the board concerned.

DSTA 155P has pluggable screw terminals.

Guidelines - Combined Analog Inputs and Outputs

DSAX 110
DSTA 001A, DSTK 223L3

DSAX 110A
DSTA 001B, DSTK 223L3

Eight single ended, unipolar current inputs and eight supervised current outputs, which means that transducers or their power supply can be grounded only within a geographically limited area, where the ground potential is the same as the system ground.

In a redundant configuration two DSAX 110 can be connected to the same connection unit. The redundant inputs and outputs are handled by the application programmer in the same way as the other analog inputs and outputs.

Guidelines - Analog Outputs

DSAO 110
DSTA 160, DSTK 223L3

Used when considerable accuracy and galvanic isolation between control system and load, channel by channel, are required. The load resistance may be a maximum of 500 Ω with 20 mA and 1000 Ω with 10 mA.

DSAO 120
DSTA 170, DSTK 223L3

Used when considerable accuracy is required. You can ground the load provided that the potential difference between the ground of the load and the ground in the controller is low. The equivalent resistance caused by the ground voltage drop and the load resistance together is not to exceed 500 Ω with a current signal.

DSAO 120A
DSTA 171, DSTK 221L3

Used when considerable accurancy and galvanic isolation between control system and load, channel by channel, are required. The load resistance may be a maximum of 600 Ω for current and minimum 1000 Ω for voltage output.

DSAO 130
DSTA 180, DSTK

Used with moderate demands for accuracy (inaccuracy 0.4%). Do not ground the load. The load resistance may be a maximum of 1 kΩ with 20 mA and 2 kΩ with 10 mA, @ U24 ≥ 25 V.

DSAO 130A
DSTA 181, DSTK 221L3

Used when considerable accurancy is required. You can ground the load provided that the potential difference between the ground of the load and the ground in the controller is low. The equivalent resistance caused by the ground voltage drop and the load resistance together is not to exceed 850Ω with a current signal.

DSAO130

DSTA 137, DSTK 221L5

DSTA 137 provides object oriented connection to DSAI 130 and DSAO 130. Regarding output features please refer to DSAO 130 using DSTA 180 above.

DSAO130A
DSTA 138, DSTK 221L5

DSTA 138 provides object oriented connection to DSAI 130A and DSAO 130A. Regarding output features please refer to DSAO 130A using DSTA 181 above.

DSTY 101

With DSTY 101 (insulation amplifier), you can obtain insulation at individual input and output channels. The insulation is obtained between primary and secondary sides and to the supply.

Guidelines - Digital Inputs

You can choose between scanned or interrupt-controlled inputs when you select the digital input board. The different methods of reading inputs are as follows:

- Scanned inputs
  The software scans the digital input boards and updates the data base in the Advant Controller 450 at regular intervals. This causes the load in the controller to remain constant, irrespective of the frequency of change at the inputs.
- Interrupt-controlled inputs
  The data base in Advant Controller 450 is only updated when the values at the inputs are changed. This gives more exact time-tagging with event handling of the inputs. Interrupt-controlled inputs also mean a lower load with low to moderate frequency of change.

DSDI 110A
DSTD 150A / DSTD 190, DSTK 221L3

DSDI 110AV1
DSTD 150A/DSTD 190V1
DSTK221L3

Scanned or interrupt-controlled 24 V d.c. inputs. You can configure the inputs for pulse catching, that is, with filter times of 100 ms at switch-on and 2 s at switch-off. This function is especially well suited for setting keys (push buttons).
In the connection unit, the current supply is divided into two groups of 16 channels each. Each group has a common 0 V. This does not prevent external voltage supply and fusing for smaller groups of channels but naturally requires that the 0 V sides can be connected. The two groups are galvanically isolated from the internal electronics.

DSDI 110A DSTK 226L3

DSDI 110AV1 DSTK 226L3

32 scanned or interrupt-controlled digital inputs. You can configure the inputs for pulse catching, that is, with filter times of 100 ms at switch-on and 2 s at switch-off. This function is especially well suited for setting keys (push buttons). You can connect up to four of the connection units listed below to this board and cable. Division between the different connection units is a free choice. The properties of the inputs are decided by the selected connection units. Each connection unit contains eight inputs.

DSTD 195 (replacing DSTD W110)

A connection unit with eight inputs for 24 V d.c. All channels are galvanically isolated.

DSTD 196 (replacing DSTD W113)
DSTD 196P

A connection unit with eight inputs for 24 V d.c. The inputs have common 0V and bias of -24 V, which means that there is 48 V over the connection. DSTD 196P has pluggable screw terminals.

DSTD 197 (replacing DSTD W120)

A connection unit with inputs for 100 V - 120 V a.c./d.c. The connection unit contains eight independent channels. The inputs are galvanically isolated from the electronics.
With connection distances greater than approximately 200 m, with an a.c. supply, the capacitive cross-talk can result in malfunctioning. Consider the technical data of the cable type concerned in relation to the input impedance of the board and switch-over levels. The connection unit is supplied with an external 24 V voltage.

DSTD 198 (replacing DSTD W130)

A connection unit with inputs for 230 V a.c. The connection unit contains eight independent channels. The inputs are galvanically isolated from the electronics. With connection distances greater than approximately 200 m, with an a.c. supply, the capacitive cross-talk can result in malfunctioning. Consider the technical data of the cable type concerned in relation to the input impedance of the board and switch-over levels. The connection unit is supplied with an external 24 V voltage.

DSDI 110A/DSDI 110AV1

DSTD 145, DSTD 147, DSTD 148, DSTK 226L5

These variants of connection units provide object oriented connection to DSDI 110A and DSDO 110. The general feature of DSDI 110A are: Thirty-two scanned or interrupt- controlled digital inputs. Pulse catching can be configured. The properties of the inputs (for example, 24 V d.c., 120 V a.c., 230 V a.c.) are decided by the selected connection unit.

Different sets of I/O boards and connection units are offered to match various object types requiring different input voltages and number of inputs per object.

DSDI 120A
DSTD 150A / DSTD 190, DSTK 221L3

DSDI 120AV1, DSTD 150A/DSTD 190V1
DSTK 221L3

Scanned or interrupt-controlled 48 V d.c. inputs, otherwise similar to DSDI 110A/DSDI 110AV1.

Guidelines - Digital Outputs

Advant Controller 450 can be equipped with digital outputs of static type (semiconductor) and with a relay contact. The different output types have partially different properties.
Certain significant properties are presented below:

- Static outputs
  These generally have a long service life, even with a high frequency of change.
- Relay outputs
  These have a shorter service life than static outputs. When the output is frequently changed, it is subject to wear and its service life is shortened. They can withstand occasional higher voltage. Different system voltages can be accommodated on the same board. A certain degree of inductive load can be accepted. Small load currents with low voltage (<40 V) can give contact problems.

In the control of two-phase motors (with a phase-displacing capacitor between the forward and reverse windings), a reverse voltage considerably higher than the system voltage can be induced

over the capacitor. This voltage is induced over the open control function and can result in the maximum permitted voltage being exceeded. This can be a problem with a.c. 230 V and with the use of DSTD 108P.

DSDO 115
4xDSTD 108/DSTD 108L, DSTK 226L3

With these connection units four times eight closing relay outputs, 24 - 250 V a.c./d.c. max 3 A are obtained. The relay contacts have a safety circuit (RC-link) for spark suppression.
For supply and grounding purposes, 32 completely individual channels are obtained.
Each connection unit (DSTD 108) is 120 mm long. The four connection units are connected to a DSDO 115 with a divided ribbon cable, DSTK 226L3. The minimum load on the relays is 2.5 VA but the lowest is 100 mA with 24 V.

A variant of connection unit DSTD 108L is used for low-current loads (maximum 200 mA).

DSDO 115/DSDO 115A
DSTD 145, DSTD 147, DSTD 148, DSTK 226L3

These variants of connection units provide object oriented connection to DSDI 110A/DSDI 110AV1 and DSDO 115/DSDO 115A.

The general feature of DSDO 115/DSDO 115A, including connection unit, are: Thirty-two channels, relay output, 24 - 250 V a.c./ d.c., max 3 A. The properties of the inputs (For example, 24 V d.c., 120 V a.c., 230 V a.c.) are decided by the selected connection unit.

Different sets of I/O boards and connection units are offered to match various object types requiring different input voltages and number of inputs per object.

DSDO 115
DSTD 110A / DSTD 190, DSTK 221L3

DSDO 115A
DSTD 110A, DSTK 221L3
/DSTD 190V1, DSTK 234L3

These give short-circuit-protected static outputs for 24 V d.c. (transistor outputs). The load current may be a maximum of 150 mA per channel for DSDO 115 and 0.5A for DSDO 115A. The supply is divided in the connection unit into two groups of 16 channels each. Each has a common supply and 0V. The outputs are galvanically isolated from the internal electronics.

DSDO 115A, DSTK 226L3

32 digital outputs. You can connect up to four of the connection units listed below to this board and cable. Division between the different connection units is a free choice. The properties of the outputs are decided by the selected connection units. Each connection unit contains eight outputs.

DSTD 108P

Connection unit with eight closing relay outputs, 24 - 250 V a.c./d.c. max 3 A. The relay contacts have a safety circuit for spark suppression. For supply and grounding purposes, 32 completely individual channels are obtained. Each connection unit (DSTD 108) is 120 mm long. The minimum load on the relays is 2.5 VA but the lowest is 100 mA with 24 V. With pluggable screw terminals.

DSTD 108LP

Same as DSTD 108P but for maximum load current on it is 200 mA.

DSTD 109P

Connection unit with eight static outputs, 24 V 2 A with common power supply.
Each connection unit (DSTD 109P) is 120 mm long. With pluggable screw terminals.

DSDO 120
DSTD120A, DSTK 220L3.2

Static outputs for 24 V - 48 V d.c. (transistor outputs). The board is designed to withstand a load up to 1 A per channel. The supply is divided in the connection unit into two groups of eight channels each. Each has a common supply and 0V. The outputs are galvanically isolated from the internal electronics.

Guidelines - Pulse Counting and Positioning Boards

DSDP 140A
DSTD 150A/DSTD 190, DSTK 225SL3

A positioning loop for positioning up to 80 kHz.

DSDP 150
DSTD 150A/DSTD 190, DSTK 225SL3

Twelve channels 5/12/24 V d.c. for pulse and frequency measurement up to a maximum of 10 kHz. Pulse or frequency measurement is selected optionally for each channel pair. To obtain acceptable accuracy, the frequencies which the two channels in a channel pair are to measure should be fairly similar.

DSDP 170
DSTX 170, DSTK 228L3

Four channel high-speed pulse counter board for up to 2.5 MHz. The board is primarily intended for control of motor operation where there is a need for position/length and speed/frequency measuring.

Guidelines - Connection of Static Converters

DSDC 111
DSTX 110, DSTK 224L3

A board to connect a thyristor converter with analog control of d.c. motor operation.

3.1.4.2 S400 I/O System

Guidelines - Analog Inputs and Outputs

With current signals and series coupling of loads, the total resistance may not exceed the resistance through which the sensor output can be driven.

The referred type designations below are valid for S400 I/O Units.

DSAX 452

This is a combination unit for 14 analog inputs and 6 analog outputs for applications which require considerable accuracy. You can ground the transducer and load if the difference in potential between the load ground and the DSAX 452 ground is within the specification.
The equivalent resistance caused by the ground voltage drop and the load resistance concerned together is not to exceed 650 Ω with a current signal, ≤ 20 mA.

Both inputs and outputs can suppress moderate CMV in the range ±10V for voltage input and ±20 V for current input. This means, in practice, that you can ground the transducer and load freely within a geographically limited area in which the difference in ground potential is within the specification.

The unit has an integrated voltage source providing d.c. 24 V for transducer supply. The voltage is fused. This supply can also be used for supply to the outputs which can then drive a current signal through a load of 650 Ω. Additionally the outputs can be supplied from an external supply unit. You can then increase the load resistance for the current signal towards 1000 Ω.

Guidelines - Digital Inputs and Outputs

DSDI 452
DSDI 451 (expansion unit)

Thirty-two scanned inputs for 24 V. All channels have a common signal return. Transducer supply is obtained from a common fused source. External voltage supply and fusing for groups less than 32 channels are possible, but the return sides of the different voltage sources must be capable of being connected. The 32 channels are galvanically isolated from the internal electronics in the unit.

DSDI 454
DSDI 453 (expansion unit)

Thirty-two scanned inputs for 48 V. For further properties, see DSDI 452.

DSDX 452(L)
DSDX 451(L) (expansion unit)

Combination unit for 20 digital 24 V inputs and 12 digital outputs. The inputs have the same qualities as the inputs on DSDI 452. The outputs are completely separated relay contacts for 24 V - 240 V a.c./d.c. The recommended minimum load on the contacts is 2.5 VA but a minimum of 100 mA with 24 V d.c. Units with an additional letter L are equipped with low-voltage relay contacts. Maximum load on the contacts is 200 mA. The recommended minimum load on the contacts is 5 mA or 0.05 VA.

DSDX 454(L)
DSDX 453(L) (expansion unit)

Combination unit for 20 digital inputs (48 V) and 12 digital outputs. The inputs have the same qualities as the inputs on DSDI 454. The outputs are completely separated relay contacts for 24 V - 240 V a.c./d.c. The recommended minimum load on the contacts is 2.5 VA but a minimum of 100 mA with 24 V d.c. Units with an additional letter L are equipped with low-voltage relay contacts. Maximum load on the contacts is 200 mA. The recommended minimum load on the contacts is 5 mA or 0.05 VA.

3.1.4.3 S800 I/O System

The general information given by way of introduction in Section 3.1.4, Process Interface is adequate for an S800 I/O system. Otherwise you are referred to the *S800 I/O User's Guide*.

3.1.5 Communication

3.1.5.1 Provided Link Types

Appropriate Hardware and Software

From the hardware viewpoint, the concept of submodule and submodule carrier is used to build a function. Please refer to Section 1.8.11.3 Submodule Carrier and Submodules for a description. For information on the possible number of instances, please see Section 3.2.4.1, Provided Link Types.

Information given is valid to the controller end of the communication.

Table 3-7. Link Types, Hardware and Software.

Link type	Submodule	Submodule carrier SC		Program module	Peripheral	Comments
		510	520			
MasterBus 300 executed in main CPU	CS513	X	X	QC07-BAS41 (Basic)	See separate documentation	(1) (2)
MasterBus 300 executed in slave CPU			X			(1) (2)
MasterBus 300E executed in main CPU		X	X			(1) (2)
MasterBus 300E executed in slave CPU			X			(1) (2)
GCOM	CI543	X	X			
Bus extension to S100 I/O						(3)
MasterFieldbus	CI570 + TC570	X	X			(4)
Advant Fieldbus 100	CI522A + TCxxx					
PROFIBUS-DP	CI541V1					
LONWORKS Network	CI572 or CI573					
EXCOM	CI531					(4)
V.24 / RS-232-C						
RCOM	CI532Vxx or CI534Vxx (5)					Protocol variant xx. See below
Multi Vendor Interface (Standard protocol)						
MVI Free-programmable communication	CI535 CI538					

(1) MasterBus 300 or MasterBus 300E is selected with a switch on the submodule CS513. See the separate manual *MasterNet* User's Guide.
(2) Selection of "executed in main CPU"/"executed in slave CPU" is made by selecting slave number on CS513. Numbers 1-6 mean slave CPU while 7-8 mean main CPU. See the separate manual *MasterNet User's Guide*.
(3) Connection for S100 I/O Bus Extension is located on the front of Processor Module PM511.
(4) A range of modems and connection units are available for the different communication media. See respective communication User's Guide.
(5) Depending on protocol.

Guidelines - Communication in General

Communication among different computers gives rise to a load divided among the communication link itself and the main CPU of the involved computers. This must be considered when you design a distributed control system.
A basic rule, always relevant, is to limit the frequency of the information transfer to what is really needed by the application. Event-controlled transfer (if possible to execute in a secure way) is preferred to cyclic transfer.

The main CPU is always loaded by a communication. The significance depends on the actual design. For the MasterBus 300, there are two different implementations in Advant Controller 450. One utilizes the main CPU on the processor board and another utilizes a dedicated slave processor on the submodule carrier. The latter represents a significantly lower load to the main CPU (but higher cost). The same information applies to MasterBus 300E.

The variants of implementation are designated with respect to the implementation:

- MasterBus 300 (executed in main CPU).
  A submodule carrier with no slave processor support is normally used (SC510).
- MasterBus 300 (executed in slave CPU).
  A submodule carrier with slave processor support is used (SC520).

The application is in no way affected by the selection.

Guidelines - Location and Exploitation of Hardware

No restrictions in location of submodule and submodule carrier in controller subrack.
Use leftover slot on a submodule carrier provided the carrier is suitable to the actual submodule, see Table 3-7 and Guidelines below.

Guidelines - MasterBus 300 (executed in main CPU)

- You cannot mix MasterBus 300 (executed in main CPU) and MasterBus 300 (executed in slave CPU) within the same controller.
- From a cost viewpoint, submodule carrier SC510 is preferable.
  You can use other type, SC520, however you cannot mix two Masterbus 300 (executed in main CPU) on the same carrier SC520.

Guidelines - MasterBus 300 (executed in slave CPU)

- You cannot mix MasterBus 300 (executed in slave CPU) and MasterBus 300 (executed in main CPU) within the same controller.

Guidelines - MasterBus 300E (executed in main CPU)

- You cannot mix MasterBus 300E (executed in main CPU) and MasterBus 300E (executed in slave CPU) within the same controller.
- From a cost viewpoint, submodule carrier SC510 is preferable.
  You can use other type, SC520, however you cannot mix two Masterbus 300E (executed in main CPU) on the same carrier SC520.

Guidelines - MasterBus 300E (executed in slave CPU)

- You cannot mix MasterBus 300E (executed in slave CPU) and MasterBus 300E (executed in main CPU) within the same controller.

Guidelines - Bus Extension to S100 I/O

- S100 I/O Bus Extension is included on the Processor Module PM511.
- See separate hardware manuals for important restrictions on the distribution (cable lengths, location, and so on) of the communication bus.

Guidelines - EXCOM

- Communication interface CI531 has two ports V.24/RS-232-C. Each port can be used for any combination of EXCOM, printer or MasterView 320.

Guidelines - V.24/RS-232-C

- Use the basic V.24/RS-232-C interface for printer and MasterView 320 communication.
- Communication interface CI531 has two ports V.24/RS-232-C. Each port can be used for any combination of EXCOM, printer or MasterView 320.

Guidelines - RCOM

- Communication interface CI532V01 has two ports. Both ports have the same protocol.

Guidelines - MultiVendor Interface (Standard Protocol)

- Communication interface CI532Vxx or CI534Vxx has two ports. Both ports have the same protocol.
- CI532Vxx is delivered with a standard protocol, for example RCOM, MODBUS, Siemens. Different protocols are sold as different articles: CI532V01, CI534V02 and so on. "V" stands for variant.
- Combining CI532Vxx, CI534Vxx, CI535 and CI538 is restricted, see Section 3.2.4.1, Provided Link Types.

Guidelines - MVI Free-programmable Communication

- The free-programmable MVI modules CI535/CI538 have two ports. Both ports have the same protocol.
- CI535 and CI538 are delivered without protocol. The user defines the protocol.
- Combining CI532Vxx, CI534Vxx, CI535 and CI538 is restricted, see Section 3.2.4.1, Provided Link Types.

3.1.5.2 Applied Communication

Interface to Application Program

Table 3-8. Applied Communication, Used Links and Interface to Application Program

Equipment	Used link(s)	Software interface (1)	
		Link DB elements	Application DB/PC elements
Advant Controller 410/450	MasterBus 300/300E (RCOM is an alternative)	CS513 (2)	DS, DAT
Advant Station 500 Series OS	MasterBus 300/300E	CS513 (2)	*Subscription, Command, Events*
Advant Station 500 Series IMS	MasterBus 300/300E	CS513 (2)	*Subscription, Command, Events*
Advant Station 500 Series ES	MasterBus 300/300E	CS513 (2)	*Set of commands Configuration data*
MasterPiece 200/1	MasterBus 300/300E, RCOM	CS513 (2)	DS, DAT
MasterView 800/1	MasterBus 300/300E	CS513 (2)	*Subscription, Command, Events*
MasterBatch 200/1	MasterBus 300/300E	CS513 (2)	GENUSD (3 ref. types) PC: defined by the prog. module QC02-BAT21
MasterGate 230	MasterBus 300/300E	CS513 (2)	---
Advant Station 100 Series IMS	GCOM	CI543	*Subscription, Command, Events*
Advant Station 800 Series IMS	GCOM	CI543	*Subscription, Command, Events*
S100 I/O	Bus Extension to S100 I/O	DSBC_174	I/O element
S400 I/O	MasterFieldbus	CI570	I/O element
S800 I/O	Advant Fieldbus 100	CI522A, CI810A/CI820	I/O element
Advant Controller 70	Advant Fieldbus 100	CI522A, AC70	DSP (Data Set Periph.) DAT, EVS(R)
MasterPiece 51	MasterFieldbus	CI570, PX	PC: COM-MP51
TYRAK L, SAMI	MasterFieldbus	CI570, CV	PC: COM-CVI1, COM-CVO1
AdvaSoft for Windows	GCOM	CI543	
MasterPiece 90	MasterFieldbus	CI570, PX	MFB-IN, MFB-OUT
Advant Controller 110	Advant Fieldbus 100 (RCOM is an alternative)	CI522A, AC110	DSP (Data Set Periph.), DAT, EVS(R)

Table 3-8. Applied Communication, Used Links and Interface to Application Program (Continued)

Equipment	Used link(s)	Software interface (1)	
		Link DB elements	**Application DB/PC elements**
ACV 700, DCV 700 Convertor	Advant Fieldbus 100	CI522A	DSP (Data Set Periph.), DAT
Advant Station 100 Series ES	Internal bus	---	*Set of commands* *Configuration data*
ABB Prologger, DCS Tuner	EXCOM	CI531, CAPXCOM	DS, DAT, Read DI, DO, AI, AO
Printer	V.24 / RS-232-C	CI531, CAPPRI	PC: TEXT, PRINT
MasterView 320	V.24 / RS-232-C	CI531, TERMPAR	TERMGEN, TERMDYN, TERMDIS, TERMREF, TERMSTR
Advant Controller 55	RCOM	CI532	MS, DAT
ABB Active Mimic Controller	RCOM	CI532	
Other manufacturers' equipment	PROFIBUS-DP	CI541	PC: PB-S, PB-R, PB-DIAG DB: PBS, PBSD
	LONWORKS Network	LON,LONCHAN	PC: LON-R, LON-S DB: LONDEV, LONNVI, LONNVO, LONMNVI, LONEVTR, LONMREF
	MultiVendor Interface - MODBUS (via CI532V02) - Siemens 3964R	CI532	MS, DAT
	MultiVendor Interface - MODBUS (via CI534V02) - Allen-Bradley DF1	MVIMOD MVICHAN MVINODE	MVB, DAT
	MVI Free-programmable communication - via CI535 - via CI538	 CI535 MVIMOD MVICHAN MVINODE	 MS, DAT MVB, DT

(1) Generally data base elements are given for establishing the link and the interface to the application program. PC: denotes PC element.
(2) The user "straps" network, node, slave number and protocol on dip-switches on the communication interface board CS513. From the network communication viewpoint, the system is then automatically configured at power-up. See strapping information in the manual *MasterNet User's Guide.* In addition to the data base element CS513, which shows basic communication parameters, further parameters are found in the elements NETWL, TL, TU, BM, NM. Those latter elements are meant for advanced users.

Guidelines - Data Set Communication

Designation of Data Sets

Data Sets (DS) are used with signal exchange between, for example, controllers. A Data Set is defined by a data base element which states if it is a transmitting or receiving Data Set, the cycle time and from where the information is received or to where it is transmitted. The data base element for a Data Set also refers to a number of DAT elements. These DAT elements contain, in turn, the values which are to be transmitted/received.

When a DS and associated DAT elements are allocated names, it is important to be able to trace the origin of the data, that is, where the data originates. One way is to give a Data Set a name in accordance with DS "from node number" - "to node number". If a Data Set is transmitted from node 12 to node 11, it is given the name DS12-11. Associated DAT elements can be given the name DS12-11.R1 (which is obtained automatically if a real DAT element is created with the help of DS).

As an alternative, you can give DAT elements function-describing names (of up to 12 characters).

Performance Considerations

Information given in Section 3.2, Technical Data Including Capacity & Performance shows that receiving Data Sets generate more load than transmitting Data Sets. To minimize the load, you can create data base elements for receiving Data Sets in an Advant Controller 450 before transmitting. Place data base elements for the Data Set which receives data most frequently at the beginning. If, despite the above actions, there are load problems in the controller or on the bus, you can transmit data event-controlled. Use the PC element SENDREQ for this. You can use the "VALID" flag on the data base element for a receiving Data Set and the DAT element as a "Fresh data available" flag.

3.1.6 Process Control

Appropriate Hardware and Software

For the available general function block library included in the basic system program and different additional system programs, see Section 1.7, Product Overview.
You are also referred to information regarding necessary hardware and software given in other sections in this chapter. These sections are more focused on concrete functions.

Interface to Application Program

The controller data base is the normal interface to the application program.
For example, there are different data base elements representing process interface such as Analog Input, Digital Output, and so on.

3.1.6.1 Application Building with AMPL

This section is not intended to be a formal guide to application programming but rather a collection of suggestions and ideas for program design and structuring. The following are general rules for program design:

- Structure the application program (see below).
- Write programs that are as readily understandable as possible.
- Avoid "smart" programming unless absolutely necessary to achieve the necessary performance.
- Prepare a draft PC diagram in which the required function is built up with the help of PC elements.
- Use the largest elements possible.
- Use the most powerful elements possible.
- Use the principles of typical solutions (type circuits).

Structuring of the Application Program

When structuring the application program, you must satisfy these three requirements:

- Structuring in accordance with the structure of the plant and the process.
- Structuring in accordance with execution time.
- Function orientation from the typical solution aspect.

The structure elements primarily used are PCPGM, CONTRM and FUNCM. SEQ and STEP are also used with sequential control.

The elements PCPGM, CONTRM and SEQ are execution-controlling. You can activate and deactivate these elements from outside—do this when high performance is required. The elements are only activated when execution of the subsidiary program (-section) is necessary.

Place the execution control in its own module with a short cycle time. Note, however, that there may be occasions such as at start, stop and emergencies when you must run all programs (-parts) simultaneously. If there are such occasions, they determine how hard the controller can be utilized.

Use the following as rules of thumb when structuring:

- Do not place the whole application in just one PC program.
- It is preferable that you place independent parts of the application program which have no data exchange or a limited data exchange in different PC programs.
- A control module (CONTRM) delimits a function to which a special cycle time is applied.
- A function module (FUNCM) delimits a function consisting of several control modules or divides a control module into subfunctions.
- Use more than three levels with structure elements only in exceptional cases.
- Use BLOCK elements to close part of a control module when reducing the load on the controller.

NOTE

Writing to the data base continues while the blocking is active.

Use a simple pin diagram when you are structuring the application program.

Signal Exchange between PC Programs

The main purpose of the division of the application program into PC programs is to divide the application into independent parts which have no signal exchange with each other. It can, however, be practical to divide the application into PC programs despite a limited signal exchange between the parts. The signals are then exchanged through a DAT element in the data base.

Use a consistent designation philosophy and a booking list. In certain cases, you can justify the use of a binary DAT element for only one binary value in order to make it possible to allocate a relevant plain language name to the element/signal.

3.1.7 Operator's Interface

3.1.7.1 Local Operator

Appropriate Hardware and Software

Communication with a local operator's station MasterView 320 is an application of V.24/RS-232-C. For further information, see Section 3.1.5, Communication. In that section you will also find an overview of the application interface used and some guidelines for the link implementation.
In other respects, Masterview 320 and its application are described separately.

Software supporting the operator function is included in an optional program module QC07-LOS41.

3.1.7.2 Central Operator

Appropriate Hardware and Software

Communication with a central operator's station, Masterview 800/1, Advant Station 500 Series Operator Station or Advant Station 500 Series IMS Station, is an application of MasterBus 300. See Section 3.1.5, Communication. In that section you will also find an overview of the application interface used and some guidelines for the link implementation.
In other respects, the named operator station products and their application are described separately.

Software supporting the operator function is included in an optional program module QC07-OPF41.

3.1.8 Availability and Security

General Guidelines

Control system availability is often discussed in relation to industrial processes, power generation systems, machines, and so on. Redundancy is one instrument to reach high system reliability and availability.

The advantages of such redundancy include:

- Improved personnel safety
- Less risk of machine damage
- Reduction of expensive production loss
- Less demand for shift work by highly paid, qualified maintenance personnel.

Processes and machines are seldom identical and it is often necessary to adapt the solution of the redundancy problem to the application concerned. It may be sufficient to equip particularly sensitive process sections or functional parts with control system redundancy. The level of redundancy considered necessary varies and can be, for example:

- 100% availability necessary - Hot stand by
- Stop for some seconds acceptable
- Stop for some minutes acceptable
- The possibility of controlled manual stopping of the process required.

When studying an operational malfunction in a production unit, it is often found that the fault is in a motor, a contactor, a valve, or field-mounted instrumentation. It can thus, in theory, appear more appropriate to duplicate an important measuring sensor or valve than to duplicate the control system, but errors in the controller have more serious consequences.

When considering whether redundancy of the control system really is the best configuration, study the question broadly. Base the result on the construction and requirements of the process and the total function. "A chain is no stronger than its weakest link."

By taking into consideration the risk of malfunction when designing a specific control system, you can obtain a high degree of availability at minimum cost.

The distribution of sensitive I/O channels to different circuit boards is a form of risk-spreading. You can divide application programs into an independent basic function and a more advanced, perhaps optimization, auxiliary function, dependent on sensitive measurement functions. This means that production need not be stopped when parts, both within the control system and externally, do not function correctly.

Other means of increasing system availability, irrespective of the configuration selected, are maintenance resources such as spare parts and the availability of trained personnel.

Duplication for Security

DANGER - CAUTION

Duplication of control system functions is one way to ensure that all tasks are performed correctly. It is, however, very important to emphasize that the security in a process control system, when it comes to personnel safety, must never be based on duplication of system functions alone. You must always check other measures as well.

In the most critical applications, a special design of the Advant OCS, the Advant Safety System, is then applicable.

3.1.8.1 Redundancy

Appropriate Hardware and Software

Redundancy is achieved by duplication of actual hardware modules.
Options for redundancy in Advant Controller 450 are described in Section 1.7.10.2, Redundancy. It is not necessary to order extra software to support a duplication of hardware.

From the configuration viewpoint, a redundant pair of I/O modules are kept together by a common data base element. Normally, the element used in a single application has the extra parameters needed for a redundant application.

Guidelines

- Always base your investment in redundancy on a relevant reliability and availability analysis. Reflect on, for example:
  - Not only the control system itself but also field instrumentation and other production equipment.
  - Costs of production stop vs. increased costs for a system with high availability.
  - Vulnerability, price and performance with different alternatives.
- Separate redundant parts as far as possible to avoid common points of failure.
  - Make use of separate I/O subracks for redundant I/O boards.
  - Make use of separate submodule carriers for redundant communication interfaces.
- Be aware of the increased need for maintenance and spare parts to keep a high level of availability.

3.1.9 Mechanics

See Chapter 2, Installation in this manual, Section 2.1, Site Planning Environment in particular.

3.1.10 Heat Dissipation

3.1.10.1 Cabinet Ventilation

To avoid overheating, when ambient temperatures are high, take into consideration the heat dissipated in the electronics cabinet. This is particularly important for cabinets with protection degree (IP41, IP54) with considerable circuit board equipment and ambient temperatures at levels approaching 40°C.

The frequency of faults is estimated to be doubled for each 20°C increase in temperature. It is, therefore, important to maintain as low a temperature as possible where the equipment is installed.

The different hardware modules in the controller and the I/O system have different outputs of heat. Accurate calculation of the heat produced by the system requires knowledge of the modules and the work cycle.

3.1.10.2 Heat Dissipation Permitted in Cabinets

The maximum permitted temperature below the subracks in the cabinet is 55°C.
The permissible amount of heat generated depends on the type of cabinet and its location. Appendix B, RM500 Cabinet - Data Sheet indicates the heat generated to give a 15°C temperature rise and a 30°C temperature rise in the cabinets. The figures are valid for cabinet type RM500.

The standard design and assembly of cabinets aim to give a maximum of 15°C temperature rise within the cabinet, which results in a maximum permitted ambient temperature of 40°C (55°C - 15°C).

In critical applications with subracks fully equipped and cabinets arranged in groups, you may need to make a calculation of the actual power dissipation and an estimation of the temperature rise within the cabinet. Calculation is recommended at system enlargement too.

Some data to be used in calculations is given below. Power dissipation for different hardware modules is collected in Appendix E, Current Consumption and Heat Dissipation.

Cabinets including a single subrack normally have no temperature rise higher than 15°C, irrespective of the disposition of the subrack, cabinet type and location of the cabinet.

3.1.10.3 Cabinets in Groups

When cabinets are installed in groups, reduce the permitted power dissipation in accordance with Figure 3-6. The permitted power dissipation in a particular cabinet is the power specified in Appendix B, RM500 Cabinet - Data Sheet multiplied by a factor from Figure 3-6.

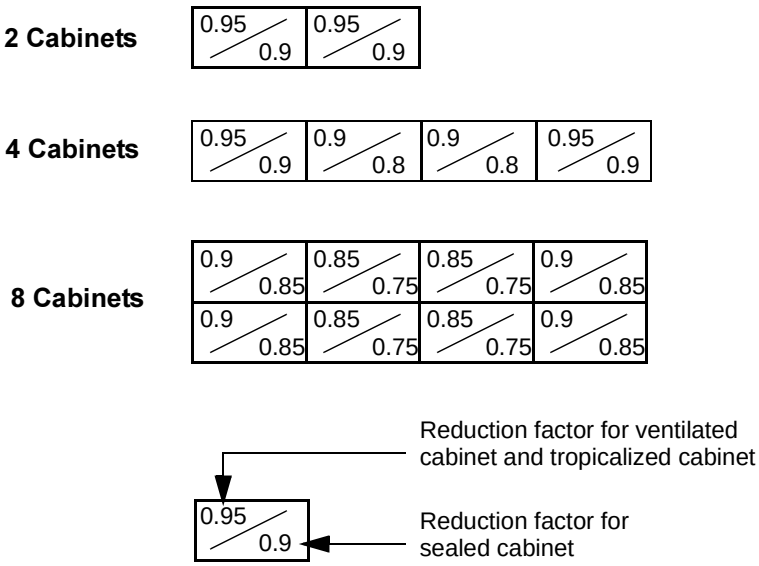

Figure 3-6. Reduction Factors for Cabinets Installed in Groups

3.1.10.4 Calculation of Heat Generated in a Cabinet

When you are calculating the heat generated in a cabinet, add up the heat generated by the different circuit boards. To this sum, add the heat generated by the power supply units and other equipment such as an extra modem, extra unit for supply of power to transmitters and so on.

See Appendix E, Current Consumption and Heat Dissipation for the power dissipated as heat by hardware modules in Advant Controller 450 and the available I/O system. It is assumed that 70% of the channels of an I/O board are active simultaneously.

A power supply unit located beneath the subracks contributes to the total power dissipation with 100 W. Do not include redundant power supply units in the calculation of number of units because of the load shedding.

The total power dissipated in the cabinet can be written as follows:

$$P_{Total} = (\sum P_{C-module}) + (\sum P_{IO-board}) + (\sum P_{Voltagesupplyunit}) + (\sum P_{Sundry})$$

3.1.11 Maintenance and Repair

From the maintenance viewpoint, use as few module types as possible in the hardware disposition of a control system. This is most relevant with the process I/O design. Standardization of I/O signal types and other electrical qualities is important to minimize the spare part stock.

If possible, do not use "smart programming" when you make an application program. Your solutions must make sense to the maintenance people in the event of disturbances and following trouble-shooting.

3.1.12 Expansion Possibilities and Spare Considerations

Expansion Possibilities

You can connect a new Advant Controller 450 to an existing control network (MasterBus 300) without affecting other stations and controllers. The new controller is automatically incorporated in the communication system.

You can expand the controller step by step, that is the system can be enlarged and made more complex in different ways. Examples of such areas are:

- Process I/O
- Communication with external computers and other systems
- Operator functions
- Application program
- Redundancy.

Of course, there are some limitations such as maximum number of possible instances and functionality offered by the available library. You can, however, exchange program modules if certain optional functions are required.
For limitations, see Section 3.2, Technical Data Including Capacity & Performance.

If desirable, you can carry out most expansions and operations on-line.
Some preparations are necessary when you are dimensioning the system since the dimensioning commands DIMDB and DIMPC are only available off-line. Practically, this is not a problem.
A number of spare instances in the database and spare PC program structures should always be defined for future limited expansions.
Extensive reconfiguration and enlargement of the system is normally linked to revamping the plant. Shut-down of the system and off-line work is then advisable.

Spare Considerations

In addition to what is said above regarding spare instances in the data base and spare space for additional application programs, there is a simple rule of thumb for the hardware design:

You can add new I/O modules on-line. It is practical to have approximately 10% to 20% of the channels spare. The same recommendation is valid for spare space in subracks.

3.1.13 Memory Calculation

Advant Controller 450 provides sufficient RAM for most applications (Table 3-9).
Other practical limits are normally attained before RAM is used up. A combination, however, of huge PC programs, thousands of I/O points and a large number of logs with the shortest possible log interval requires a lot of RAM. In such cases, you are advised to make a memory estimation as soon as possible in the preliminary design work.

Empirical formulas are necessary for you to make a quick estimation of the memory requirement. Table 3-9 for memory requirement calculation is presented below.
Forms for you to use in practice are given in Appendix G, Memory Calculation.

An explanation of the memory requirements of the different functions follows. You can assume that the items listed include sufficient memory for common applications of a PC element. If the application concerned has a special requirement in one or more respects, for example, the PC program can be very complex, it may be necessary to adjust the memory requirements for this. See the PC element manual for information regarding the memory requirements of individual PC elements.

When discussing the memory, please note that there is a limit. The local data area available for each PC program is limited to 32 kByte.
If the application program is well structured, and divided into several PC programs, this limit normally has no relevance.
Structuring of the application is strongly recommended for other reasons as well. It is the basis of easily interpreted documentation (for example circuit diagram), effective maintenance and simple future system enlargement.

Explanation of Memory Requirement

AI/AO: An application with two four-input ADD elements (or other typical elements) is assumed for each channel.

DI/DO: An application with two four-input AND gates (or other typical gates) is assumed for each channel.

PIDCON: The feedback control loop consists of a PIDCON PC element with all size parameters set to 1 and one PIDCON data base element.

PIDCONA: The feedback control loop consists of a PIDCONA PC element with all size parameters set to 1 and one PIDCONA data base element.

MANSTN: The manual station consists of one MANSTN PC element with all size parameters set to 1 and one MANSTN data base element.

RATIOSTN: A RATIOSTN PC element with all size parameters set to 1 and one RATIOSTN data base element.

GENCON, GENBIN, GENUSD: An application corresponding to that in the manual for functional units is assumed for each functional unit.

VALVECON: The valve control consists of a VALVECON PC element with all size parameters set to 1 and one VALVECON data base element.

MOTCON: The motor control consists of a MOTCON PC element with all size parameters set to 1 and one MOTCON data base element.

GROUP: The group start consists of an application corresponding to that in the manual for the functional unit GROUP. The group start contains eight steps. The logic for control and presentation contains around 70 PC elements. Subordinated functional units of the type MOTCON are not included in this figure.

SEQ: The sequence is assumed to consist of a sequence head, 10 steps and one data base element SEQ.

TEXT: Consists of one data base element TEXT.

Table handling: The figures are calculated for one table with 10 rows and 100 values per row.

MasterView 320: The displays are assumed to have 40 text strings with 20 characters and 30 dynamic values. The event list is assumed to accommodate 100 events.

Central operator station: The numbers for logs are based on a log with 10 variables each with 240 stored values. Each value takes approximately 5 bytes.

Each group member in the group alarm function is assumed to be included in three group alarm objects.

MasterBatch 200/1: The number for PROCESSES is based on 50 storage vessels, four sections and 20 operations with six recipe variables each.

Space for storage of User Diskette content: Included only if you choose the user diskette as a backup option in Advant Controller 450. The memory space can be dimensioned.
100 kByte is a space suitable for most requirements.

Spare RAM area: Reserve RAM capacity is required because information about memory requirements of the different functions is generalized and inherently uncertain. This RAM compensates for minor departures from the data constituting the basis of the memory requirement presented. Extra memory is also required when commissioning to permit smaller adjustments of the application program.

Total RAM requirement: Must be less than the RAM size of the processor module.

Table 3-9. Calculation of RAM requirement

Object type	Remark	Total	Factor (kbytes)	RAM req.
AI/AO signals	S100 I/O		x 0.30	
	S400 I/O (MP 51 not included)		x 0.30	
	S800 I/O		x 0.27	
DI/DO signals	S100 I/O		x 0.26	
	S400 I/O (MP 51 not included)		x 0.26	
	S800 I/O		x 0.14	
S800 I/O station	No. of S800 I/O stations on AF 100		x 0.40	
Calculated signals	For presentation and event handling in AS 500 Series operator stations (including signals via Advant Fieldbus 100)		x 0.30	

Table 3-9. Calculation of RAM requirement (Continued)

Object type	Remark	Total	Factor (kbytes)	RAM req.
PIDCON	Excluding I/O signals		x 1.50	
PIDCONA	Excluding I/O signals		x 8.5	
MANSTN	Excluding I/O signals		x 0.80	
RATIOSTN	Excluding I/O signals		x 1.00	
GENCON	Excluding I/O signals		x 0.50	
GENBIN	Excluding I/O signals		x 0.50	
GENUSD	Excluding I/O signals		x 0.50	
VALVECON	Excluding I/O signals		x 0.60	
MOTCON	Excluding I/O signals		x 0.80	
GROUP	Excluding I/O signals(1)	1	x 3.00	
SEQ	Excluding I/O signals		x 1.00	
DAT	No. of DB elements		x 0.02	
TEXT	No. of DB elements		x 0.14	
Table handling	No. of tables(2)		x 4.90	
MasterView 320	Basic requirements for QC07-LOS41	1	x 240.00	
	No. of displays(3)		x 2.00	
	No. of MasterView 320 with event lists(4)		x 9.00	
AS 500 Series operator station and IMS Station or MV800/1	Basic requirement for QC07-OPF41	1	x 799.00	
	No. of trend data storage logs(5)		x 12.00	
	Group alarm, No. of group objects		x 0.13	
	No. of group members		x 0.09	
MasterBatch 200/1	Basic requirement for QC07-BAT41	1	x 418.00	
	No. of SECCONx1.7+OPCONx6.0+ TANKCONx1.8		x 1.00	
	No. of processes(6)		x 25.00	
PROFIBUS DP	No. of PROFIBUSES		x 1.20	
	Number of PROFIBUS slaves		x 0.80	

Table 3-9. Calculation of RAM requirement (Continued)

Object type	Remark	Total	Factor (kbytes)	RAM req.
LONWORKS Network	No. of LONWORKS Communication modules (CI572/CI573)		x 65	
	No. of LONWORKS devices		x 0.2	
	No. of LONWORKS variables (input and outputs)		x0.06	
	No. of LONWORKS multiple network variable		x 0.33	
	No. of LONWORKS Event Treat		x 0.14	
No. of MasterBus 300/300E, RCOM/RCOM+, GCOM and MultiVendor Interface			x 8.00	
User Defined PC elements	Basic requirements for QC07-UDP41	1	x 132.00	
	Storage of user defined PC elements(7)	1	x 150.00	
Space for storage of User Diskette contents(7)			x 100.00	
Basic requirements for QC07-LIB41		1	x 32.00	
Basic requirements for QC07-LIB42		1	x 479.00	
Basic requirements for QC07-FUZ41		1	x 40.00	
Basic requirements for QC07-COM41		1	x 33.00	
Basic requirements for QC07-BAS41		1	x2207.00	
Spare RAM area(8)		1	x 40.00	40.00
Approximative total RAM requirement in kbytes (9)				

(1) The figures are calculated for 8 steps (MOTCON not included).
(2) The figures are calculated for 1 table with 10 rows and 100 values per row.
(3) The figures are calculated for 40 text strings with 20 characters and 30 dynamic values.
(4) The figures apply to 100 events per list.
(5) The figures are calculated for 1 log with 10 variables, each with 240 stored values.
Each value takes approximately 5 byte.
(6) The figures are calculated for 50 storage vessels, 4 sections and 20 operations with 6 recipe variables each.
(7) This is a recommended starting value. Adjustment of this figure might be necessary to do when the real need is known.
(8) Recommended value for most systems.
(9) Must be less than the RAM size of the processor module (8 or 16 Mbyte).

3.1.14 CPU-optimization, Load Calculation

This section deals with the program execution capacity of an Advant Controller 450. It provides answers to questions such as, "What can I expect the load generated by my application to be?" It also provides a survey of how the software functions in an Advant Controller 450. In conclusion, you can find recommendations for the reduction of system load.

What is the CPU to do?

The different functions in an Advant Controller 450 are allocated different priorities.
This means that a function with a higher priority takes precedence over a function with a lower priority if both functions are activated simultaneously. A schematic presentation of the priority system follows.

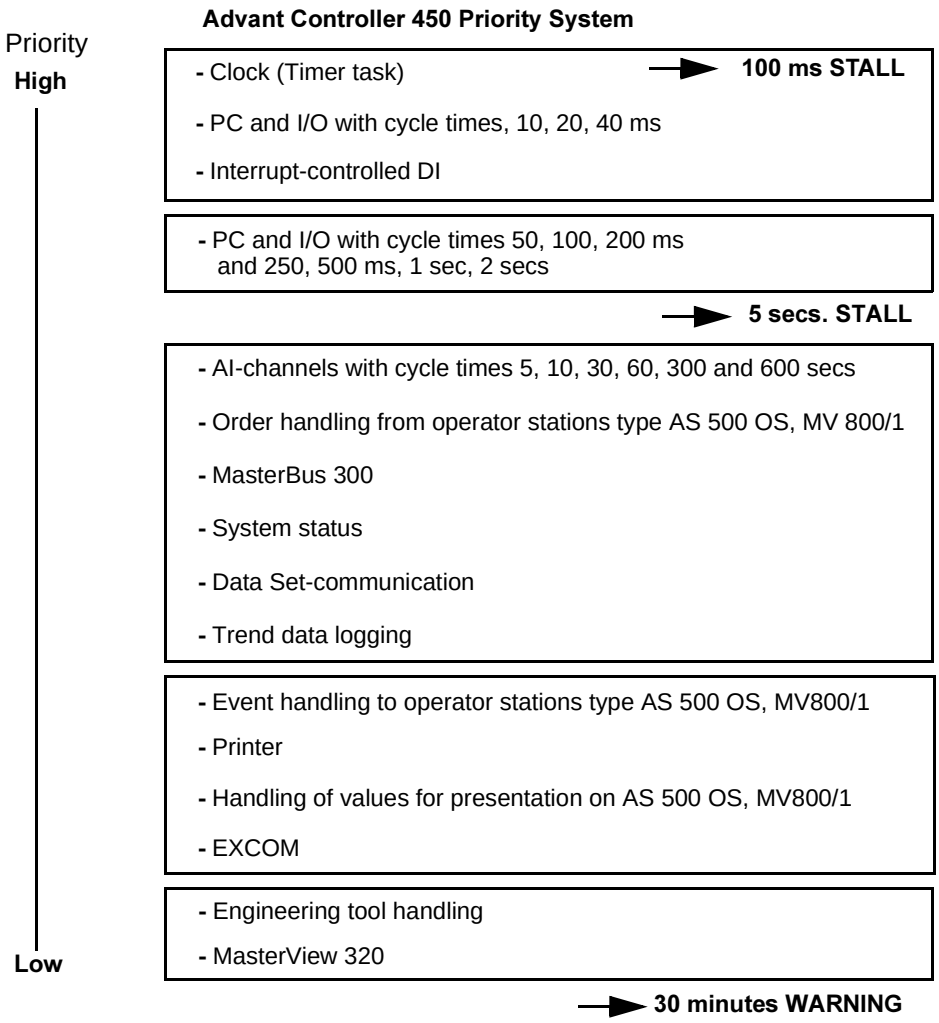

Figure 3-7. Advant Controller 450 Priority System

There is a "stall level" between the different levels. This means that the system must execute all functions, including all PC-control operations, at least each fifth second for the system to continue operation. If an operator station or an engineering tool is connected to the controller, a warning consisting of a system message is presented on the display screen if all functions are not executed within a 30-minute period. This protection is provided to guarantee that all functions in an Advant Controller 450 have sufficient time to perform their tasks.
The user is not normally concerned with priority levels since these are managed automatically by the system, but the user should be aware of the priority system and stall level if the system is heavily loaded.

CPU Load Calculation

With certain heavy load situations in an Advant Controller 450, or if you want to determine if one controller is sufficient for a particular application/load, it may be valuable to perform a CPU load calculation.

In the development of standard solutions, including type circuits of different scales, other working methods are strongly recommended. The best result is obtained by load measurement in an actual target system. For CPU load measurement, see the use of the ANPER command in the manual *AMPL Configuration Advant Controller 400 Series*.

Load calculation is not intended to give absolute values, but rather to indicate the magnitude of the load generated by the different parts. The calculation also provides an excellent basis for determination of where optimization would be most effective if it is necessary to lower the CPU load.

Two calculation methods are presented below. The main differences between the methods are the accuracy obtained and the work required. Approximations, of course, provide less accuracy but rapid results.

The equation for calculating the total CPU load for several similar functions is:

$$CPU_{\text{load}} = NF \times T \times 100 / (\text{TS}) \quad [\%]$$

where NF =number of functions (for example feedback control loops)
T =execution time for the function (ms)
TS =cycle time for the function in PC (ms)

The equation is generalized for load calculation in Advant Controller 450.

When the load is to be calculated or estimated, concentrate on those circuits which are frequent. You can disregard some quite advanced single circuits from a PC program load viewpoint. Just include the relevant I/O in the calculation/estimation. Sometimes complexity necessitates a detailed study of a certain part of an application. Then it is practical to combine an "accurate method" with a "shortcut method."

The structures of the two calculation methods are illustrated in Figure 3-8.
When calculating, include only relevant items.

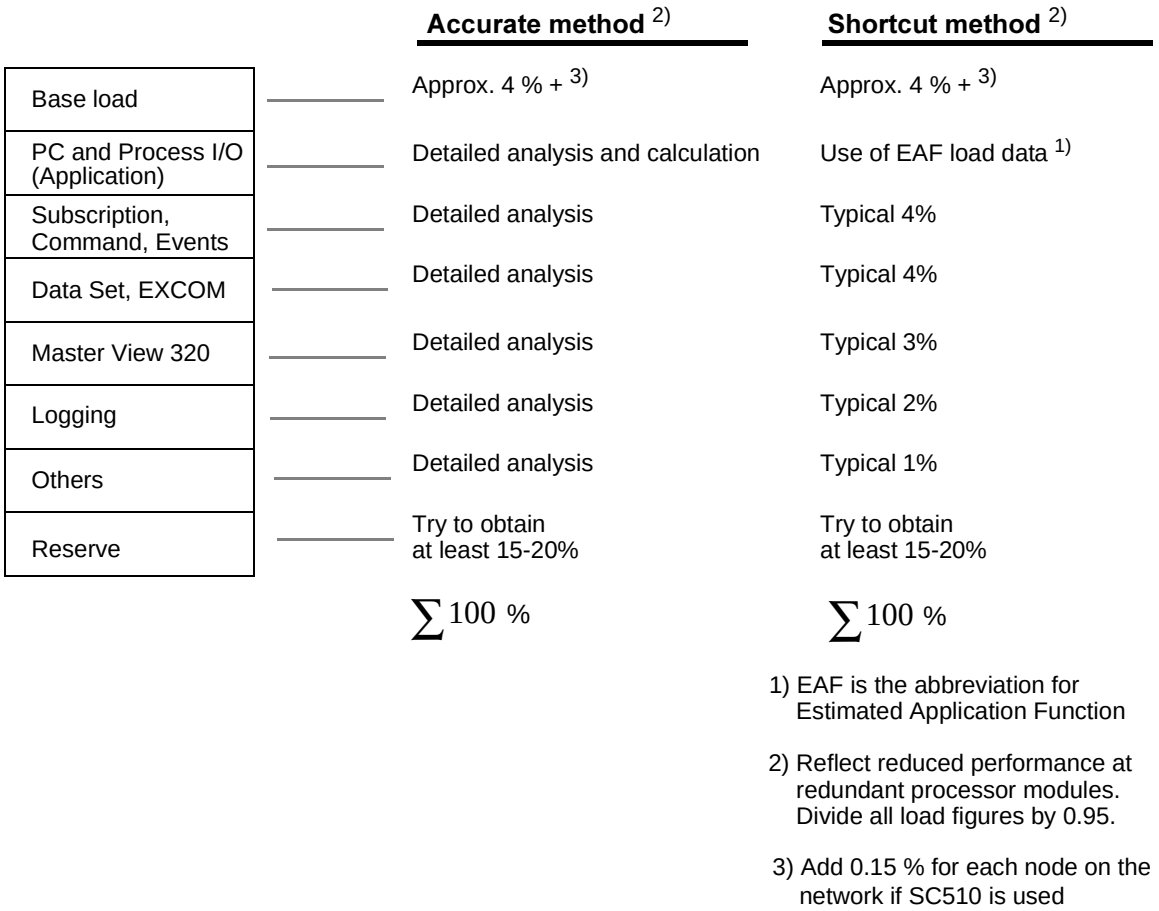

Figure 3-8. CPU Load Calculation Methods

The method commonly used when accuracy is desirable is based on an analysis of I/O, PC, Communication, and so on, part by part, to obtain load figures for each part and the complete system.

Another shortcut method to analyze the CPU-load is to work with estimated application functions of varying complexity.

Forms to be used in your own practice are given in Appendix F, Load Calculation.

For execution times to use in analyses and estimations of CPU load, see Section 3.2, Technical Data Including Capacity & Performance. See the manual *PC Element* for detailed information regarding execution times for the individual PC elements.

Additional Information for Redundant Processor Modules

The performance of redundant processor modules is reduced to 95% in relation to a single system. Divide all load figures given by 0.95.

How can an Excessive CPU-load be Reduced?

First analyze the application to determine where you can take the most effective optimization action. Primarily, you can take optimization action in three areas, I/O, PC and communication. As usual with optimization, it is most profitable to optimize the part which uses the most CPU-power.

Recommendations for optimization in these three areas are given below.

I/O

- If many interrupt-controlled DIs with high frequency of change are used, it can be optimal to go over to cyclically scanned DI, if this is permissible from the time-tagging viewpoint. The form for "Calculations of CPU-load from inputs" can indicate if this is optimal with interrupt-controlled or scanned DI.
- Are I/O signals scanned with an unnecessarily short cycle time? I/O signals normally need not be scanned more often than the cycle time of the execution unit in the PC in which they are used. Note that it may be necessary to scan AI quickly because of the frequency content of the input signal. The signal can be low pass-filtered in AI software, thus providing frequency components with lower frequency in the signal which the application program uses. This means that the application program can be run more slowly than the corresponding AI is scanned.
- Select as large dead-band for the AI channel as possible. Of course the accuracy requirement must be considered.

PC

- Check that no execution unit is executed with an unnecessarily short cycle time.
- If possible, break out parts of an execution unit or execution units and allocate to these a longer cycle time.
- Utilize the option to block execution units when they need not be executed. It is also possible to introduce a BLOCK element here when only parts of an execution unit can be blocked.

Communication

- You can transmit Data Sets event-controlled on a MasterBus 300 with the help of the PC element SENDREQ. Use the VALID flag in the receiving DS as an acknowledgment that the signal is received.
- Always present digital signals on the operator station screen with event-controlled update in combination with 9 sec cyclic update, to get fast updating on changes while minimizing the load.

3.2 Technical Data Including Capacity & Performance

This section provides technical data that is relevant from a controller viewpoint. Much of the detailed technical data about hardware modules is given in Appendix A, Hardware Modules. This appendix gives a summary of the supported hardware modules. You can find references to technical information either included in Appendix A or separately ordered.

Technical data about communication links is given in separate documentation for the specific link.

The primary structure outlined in Section 1.8 Product Overview is the basis of the presentation. The following subordinated headings are used when relevant:

- **General Technical Data, Capacity**
  Typical information given is maximum number of instances, magnitudes, distances, and so on.
- **Performance**
  Typical information is accuracy, for example CPU load.

3.2.1 General System Utilities

3.2.1.1 CPU

General Technical Data, Capacity

Table 3-10. Technical Data of CPU and Memory

Data	Advant Controller 450
CPU type	MC68040
Clock frequency	25 MHz
RAM (total)	8 alt. 16 MByte
RAM (for application)	Calculate from Table 3-9

Performance - General

The load caused by different subsystems in the controller is reported below. To start with, you will find an overview. The following headings cover details to respective subsystems, apart from individual PC element load data, which is included in the PC element manual.
All performance data is based on actual measurements in Advant OCS configurations.

For instructions on how to make calculations, see Section 3.1.14, CPU-optimization, Load Calculation.

NOTE

The performance of redundant processor modules is reduced to 95% in relation to a single system. Divide all load figures given by 0.95.

The load from cyclic functions in Advant Controller 450 is built up as shown in Figure 3-9.

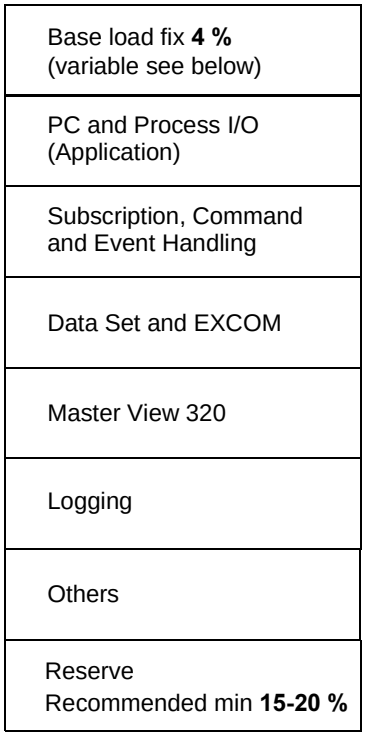

Figure 3-9. Load from Cyclic Functions, Overview

Performance - Base Load

The fix base load 4 % of a controller can be further subdivided as follows:

- General load 1.5%
  including basic network communication load (MasterBus 300)
  irrespective of number of links, redundancy or type of communication interface module (that is utilization of slave CPU or not).
- PC and Process I/O related load 2.5%
  This latter load does not exist in working mode CONFIGURATION.

A variable base load exist. Each additional node on the network will increase the load 0.15 % if SC510 is used. This extra load will not appear if the SC520 is used.

Performance - PC and Process I/O (Application)

Process I/O Handling

In addition to the base load, the following handling times apply to the various I/O channels. All times are in msec and per channel, where not otherwise indicated.

Table 3-11. Load from Process I/O Handling

Channel type	Basic time (each execution)	Addition on change (1) (VALUE changed)
AI	0.20	0.15
DI scanned	0.20/board	0.05
DI interrupt	--	0.60
AO	0.02	0.18
DO	0.003	0.13
AIC	0.003	0.08
DIC	0.003	0.05
AOC	0.003	0.03
DOC	0.003	0.03

(1) Channels with NORMAL_TREAT = 1 (event handling selected) will give rise to increased load when the event occurs, which means VALUE changed (DI) or LIMIT exceeded (AI), this is not included in the table. However this is taken care of by having the stipulated reserve capacity.

PC System

In addition to the base load of the PC interpreters (included in base load given above), the CPU load generated by the PC system is composed of the following parts:

- PC element execution. The PC element manual contains information on the load from each PC element.
- Reading and writing of data to/from the data base. Each time a value is read from the data base to a PC element, or written to the data base from a PC element, 2 microsecs are spent. When a process output channel is written, add the time for I/O handling.

Estimated Application Functions

Use the following execution times and load figures when the shortcut method of CPU load calculation is applied:

- One feedback control loop takes approximately 0.8 ms.
  Thirty feedback control loops with the cycle time 1000 ms thus give approximately 2.5% load. (Complexity: 1- PIDCON, 1- AI, 1- AO and several calculation and logic elements.)
- A corresponding feedback control loop as above but using PIDCONA takes approximately 1.0 ms.
- One feedback control loop for a three-position actuator takes approximately 1.0 ms.
  Ten such loops with the cycle time 2000 ms give approximately 0.5% load.
  Complexity: 1- PIDCON, 1- CON-PU1, 2- AI, 2- DO and some calculation and logic elements.
- When cascade-coupled regulators are applied, consider approximately each loop in the cascade as a single loop. Use the figures above.
- A simple feedback control loop takes approximately 0.5 ms.
  Complexity: 1- PI element, 1- AI, 1- AO and 5 simple arithmetic and/or logic elements.
- One ratio station or manual station takes approximately 0.5 ms.
  Complexity: 1- RATIOSTN alt. MANSTN, 1- AI, some arithmetic and logic elements.
- One AI or AO takes approximately 0.25 ms.
  The load figure is valid to different AI signal types: standard signal, Pt 100 and thermocouple signal.
  Fifty AI with cycle time 1000 ms gives approximately 1% load.
  Complexity: 1- AI alt. 1- AO.
- One measuring circuit, for example mass flow measuring, max/min selector, application adapted linearization, and so on takes approximately 0.4 ms.
  Complexity: 1- AI, some 5 arithmetic elements and logic elements.
- A motor drive takes approximately 0.7 ms.
  Fifty motor drives with cycle time 1000 ms give approximately 3.5% load.
  Complexity: 1- MOTCON, 1-AI, 5- DI (interrupt), 1- DO, some logic elements.
- An on/off valve control takes approximately 0.3 ms.
  Fifty valve controls with cycle time 1000 ms give approximately 1.5% load.
  Complexity: 1- VALVECON, 2- DI, 1- DO, some logic elements.

The execution time of a digital signal DI or DO with attached interlocking logic depends of certain conditions. Table 3-12 gives you some alternative applications.

Table 3-12. Example of Execution Times of Digital Signals

Signal type Condition	Change frequency	Load example (100 signals, PC element cyclic time: 250 ms)
DI Interrupt, low change frequency	0.02 Hz (50 s)	0.3%
	0.1 Hz (10 s)	0.8%
DI Interrupt, high change frequency (This design should be avoided)	0.5 Hz (2 s)	3.2%
	1 Hz (1 s)	6.2%
DI Cyclic, low change frequency	0.02 Hz (50 s)	0.4%
	0.1 Hz (10 s)	0.5%
DI Cyclic, high change frequency	0.5Hz (2 s)	0.7%
	1 Hz (1 s)	0.9%
DO Low change frequency	0.02 Hz (50 s)	0.4%
	0.1 Hz (10 s)	0.5%
DO High change frequency	0.5Hz (2 s)	1%
	1 Hz (1 s)	1.8%

Table 3-12 includes some technical terms which require explanation:

- **Interrupt** means that the execution of the input signal software (the DB function) is initialized by the process signal change of state.
- **Cyclic** means that the input is scanned cyclically. Normally, the scan rate configured is the same scan rate used for the PC program scan rate.
- **Low/high** change frequency relates to the actual PC program scan rate. That is low means that the time between changes is much longer than the time between PC element executions (determined by the PC program scan rate). High means that the time between changes has the same magnitude as the time between PC element executions.

Complexity: 2 - 4-input AND gates per digital signal.

Performance - Subscription, Command and Event Handling

Subscription

The load in an Advant Controller 450 caused by a central operator station or information management station subscription is a linear function of the number of "objects" (for example, AI, DI, PIDCON) subscribed for and of the update frequency. The load only comes up when a subscription is utilized.

NOTE

The capacity of the communication bus must also be considered in the performance calculation. See separate documentation attached the used bus.

Load data is given by a diagram, Figure 3-10. By extrapolation you may obtain the load figure for an extended number of objects.

First an example and some general comments:

A display with 100 objects from one Advant Controller 450, with an update cycle of 3 sec, generates a load of approximately 1% in the controller. Use of 7 different object types and communication module CS513 with a slave CPU is presupposed.

Always present digital signals with event-controlled update in combination with 9 sec cyclic update, for fast updating on changes while minimizing the load.

The total load in the controller from subscriptions for displays should normally not exceed 20%.

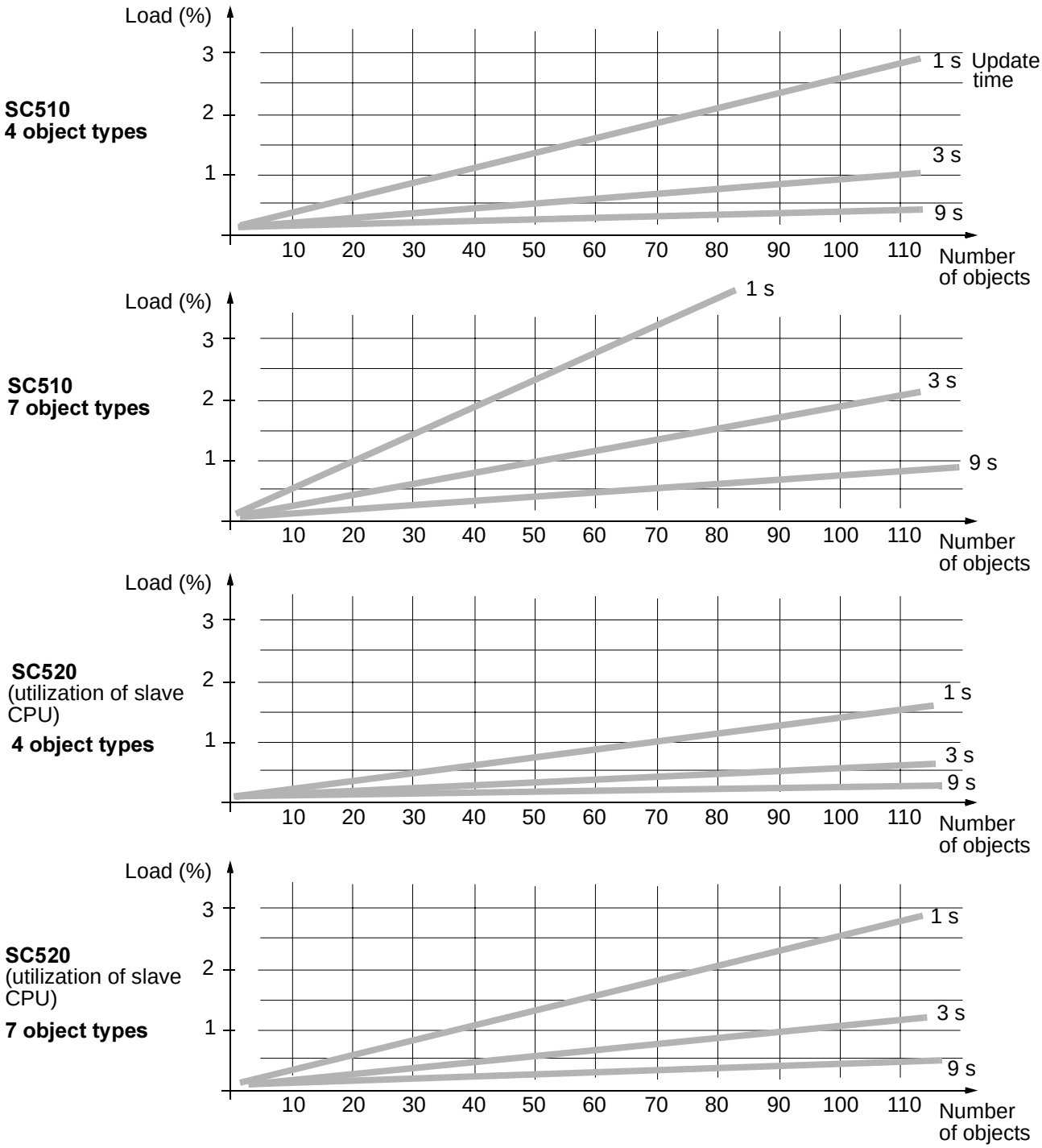

Figure 3-10. Load Caused by Subscription

Command

The load in a controller caused by a command from an operator station or an information management station is non-recurrent and relatively small. It can be disregarded.

Event Handling

I/O signals (including calculated variants) with NORMAL_TREAT = 1 (event handling selected) will give rise to increased load when the event occurs, which means VALUE changed (DI) or LIMIT exceeded (AI). However this is taken care of by having the stipulated reserve capacity.

Performance - Data Set with MasterBus 300

Full data sets (that is with 24 DAT values) are assumed. However the length of the data sets has little effect on the load in Advant Controller 450.

Figure 3-11, sending data sets and Figure 3-12, receiving data sets show the additional load from these applications. The CPU load caused by the basic network communication between two nodes is included in the CPU base load figures given.

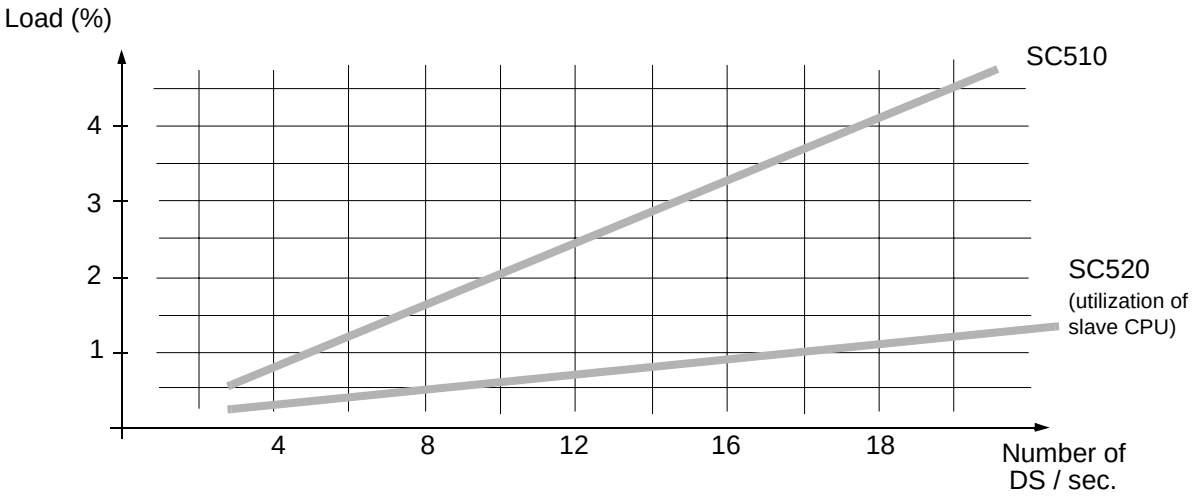

Figure 3-11. Load Caused by Sending Data Set (MasterBus 300)

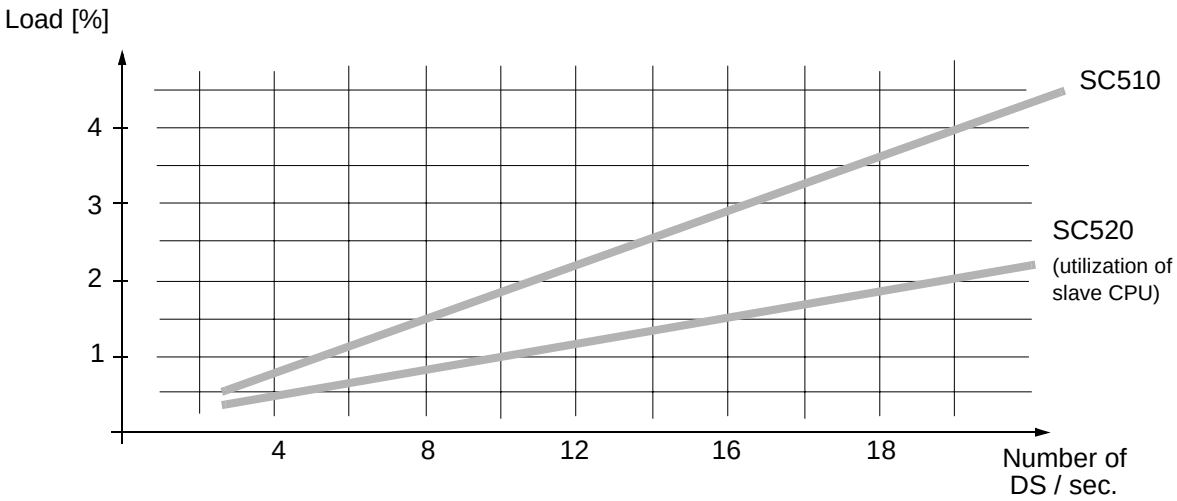

Figure 3-12. Load Caused by Receiving Data Set (MasterBus 300)

Performance - Master View 320

The resulting CPU load in Advant Controller 450 from one MasterView 320 is given in Figure 3-13.

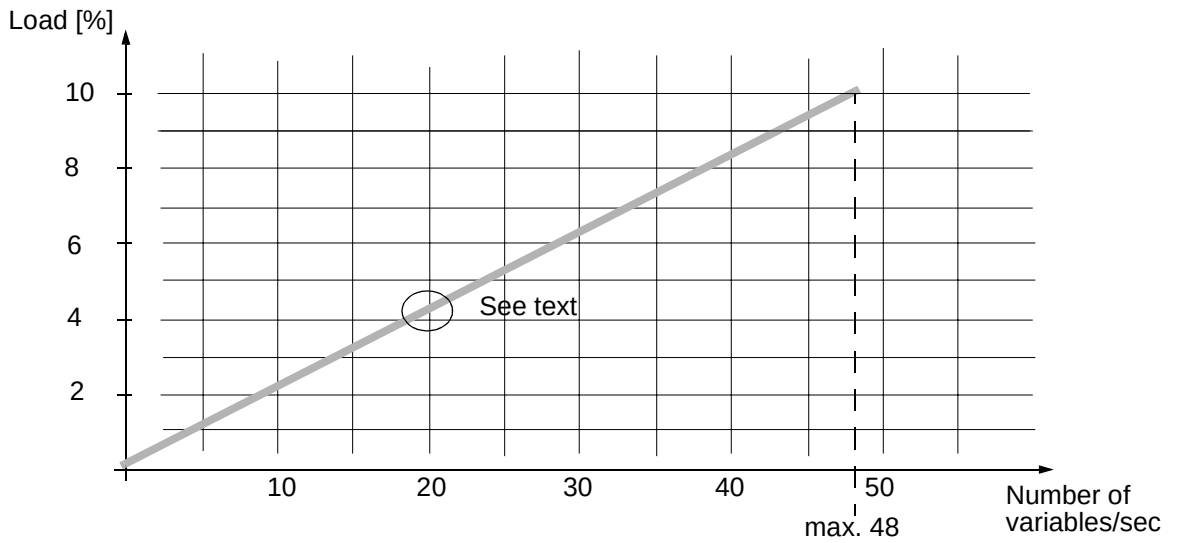

Figure 3-13. Load Caused by a MasterView 320

On the X-axis you can find the update requirement from a display, which is **presented on the screen**. Note that the load caused by, for example, 20 variables updated every second is the same as the load from 40 variables updated every other second. If several MasterView 320 is used at the same time (with a display on screen) you have to add the load figures from each terminal.

Performance - Logging

The load caused by each individual log can be estimated from the diagrams and models below. Finally make an addition.

The lowest configured value of sampling interval or log interval for an actual log is used when entering the diagrams. In that way the different load caused by a momentary log and a mean value log is practically considered.

A primary and a secondary log is treated in the same way when analyzing the CPU load. The secondary log normally gets its data from a primary log. This means that the load data from the primary log and the secondary log must be added up.

Short Log Intervals, 1 s - 10 s

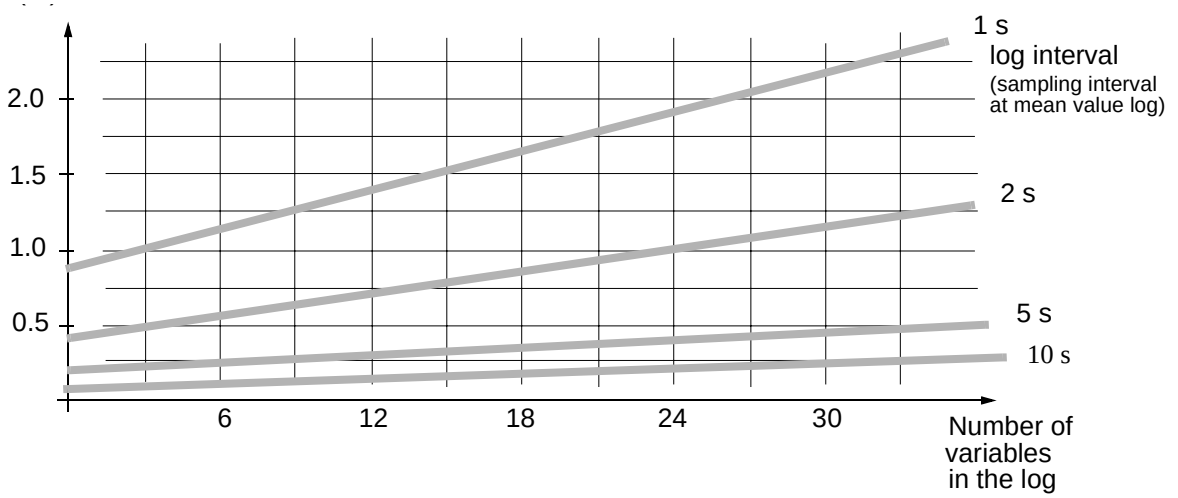

Figure 3-14. Load Caused by a Log (Short Intervals)

Medium Log Intervals, 12 s - 30 s

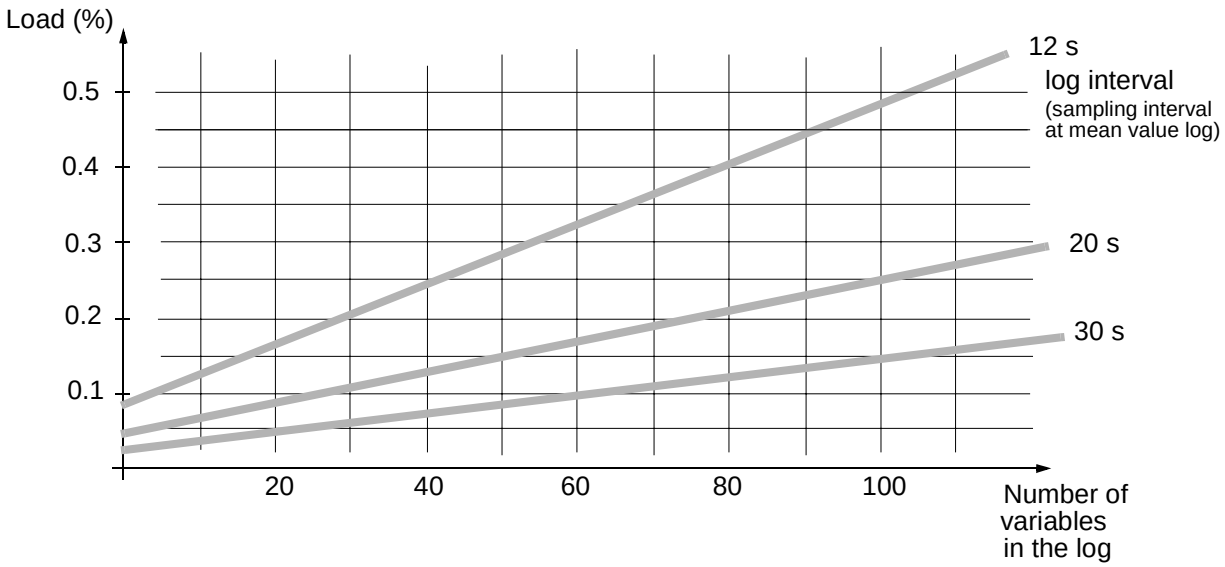

Figure 3-15. Load Caused by a Log (Medium Intervals)

Long Log Intervals, ≥1 minute

A typical load caused by a single long interval log including 100 variables can be set to 0.05%.

Performance - Others

General

A number of applications of communication links are dealt with below. The communication link itself will give rise to a small controller CPU load. This load is specified for each application and should be finally added when the individual sending/receiving is considered.

NOTE

The capacity of the communication link must also be considered in a performance calculation. See separate documentation attached the used link.

Data Set Peripheral with Advant Fieldbus 100

Data set peripherals (DSP) are cyclically transmitted to their respective destinations, with a cycle time selectable in the range 32 ms to 4096 ms.

The Advant Controller 450 CPU load from data set peripheral communication can be estimated from the curves given in Figure 3-16 and Figure 3-17.

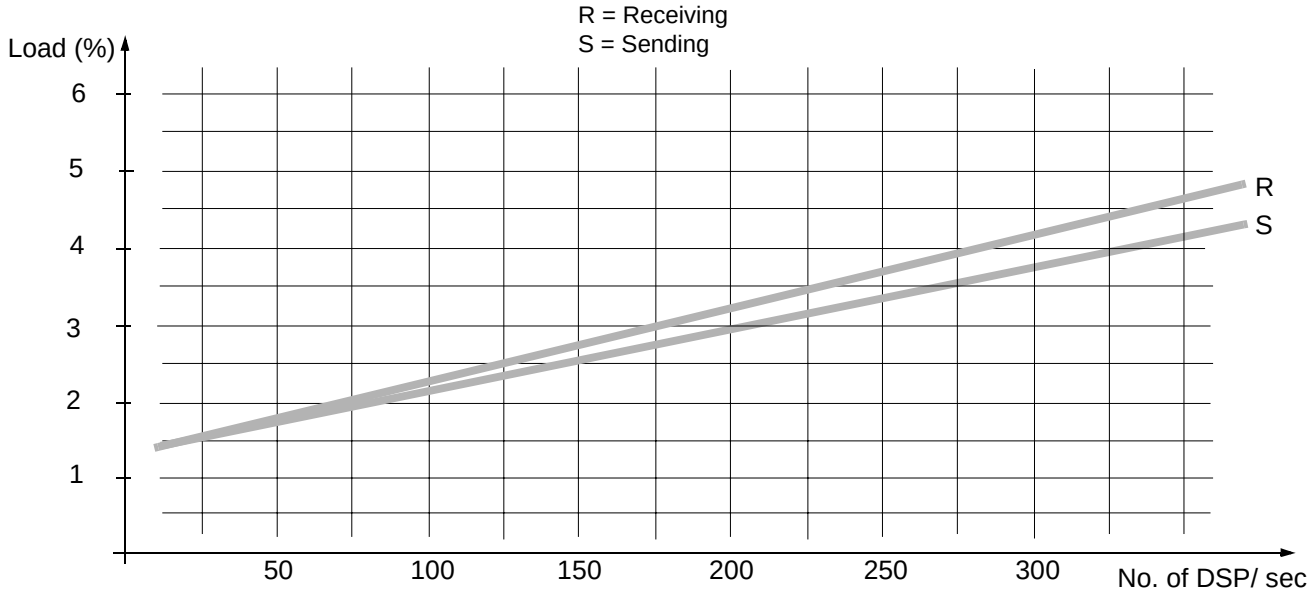

Figure 3-16. Load Caused by DSP with Advant Fieldbus 100, Basic Cycle Time 32 ms

The basic cycle time for the DSP scan task is set to 32 ms with the APP command.

Add the basic link load = 0.2 % (no sending/receiving).

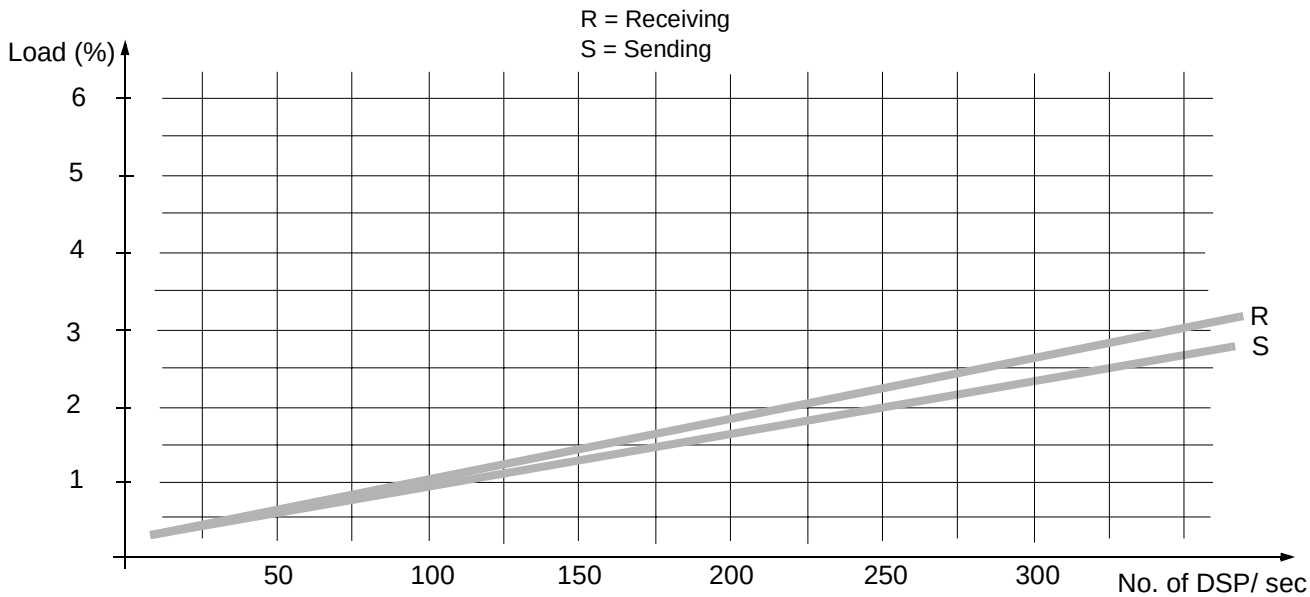

Figure 3-17. Load Caused by DSP with Advant Fieldbus 100, Basic Cycle Time 512 ms

The basic cycle time of the DSP scan task i 512 ms (default value).

Add the basic link load = 0.2 % (no sending/receiving).

Data Set and AI, AO, DI, DO with EXCOM

The load in an Advant Controller 450 caused by a communication with an external computer using EXCOM is approximately the same irrespective of if the actual controller is a transit node or a slave node in the communication. The computer is always master.

Reflect the following when you read the load data at different transmission rates (bps) given in figures below.

- The load algorithm is quite complex and the straight lines in the figures are practical approximations only.
- Limit values for maximum number of messages (with a given number of signals in the message) is given.
- A limit value within parenthesis is estimated.
- You should consider the individual signals included in a data set package in the same way as AI-, AO-, DI-, DO-signals.
- To minimize the CPU load and to get high communication throughput you should apply several signals in each message.

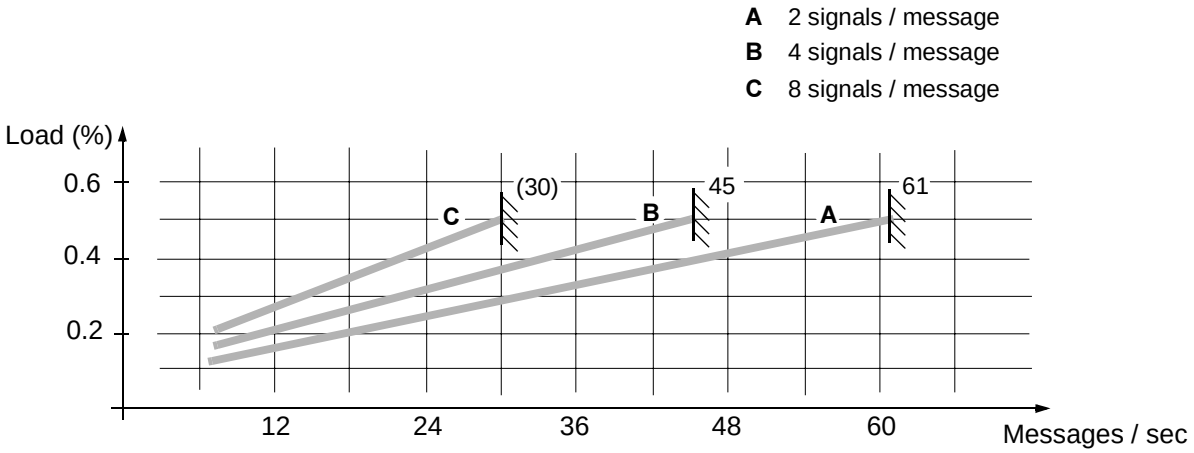

Figure 3-18. Load Caused by EXCOM, 1200 bit/sec.

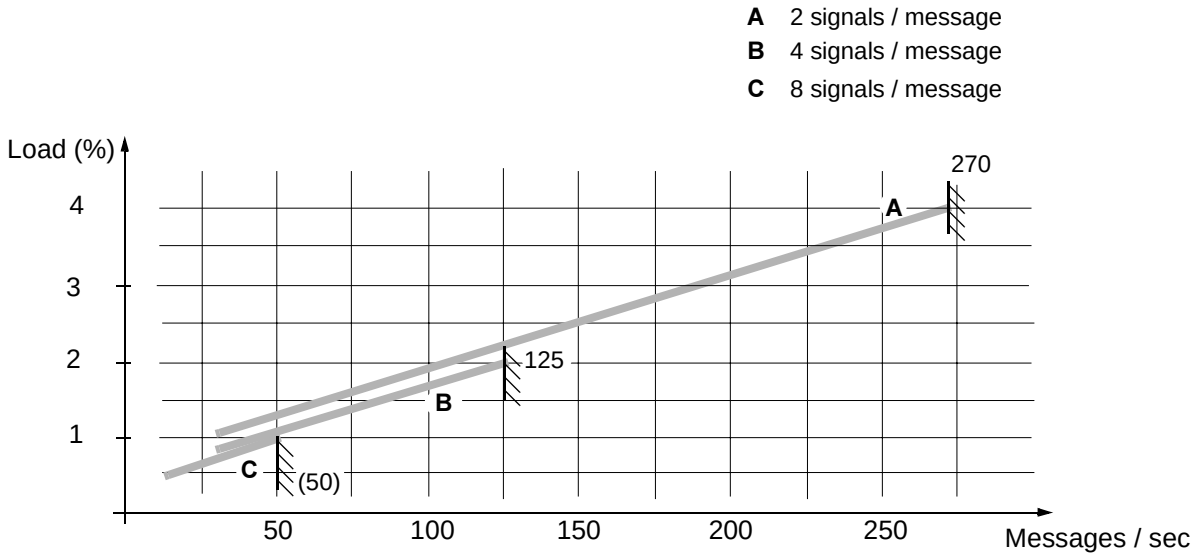

Figure 3-19. Load Caused by EXCOM, 9600 bit/sec.

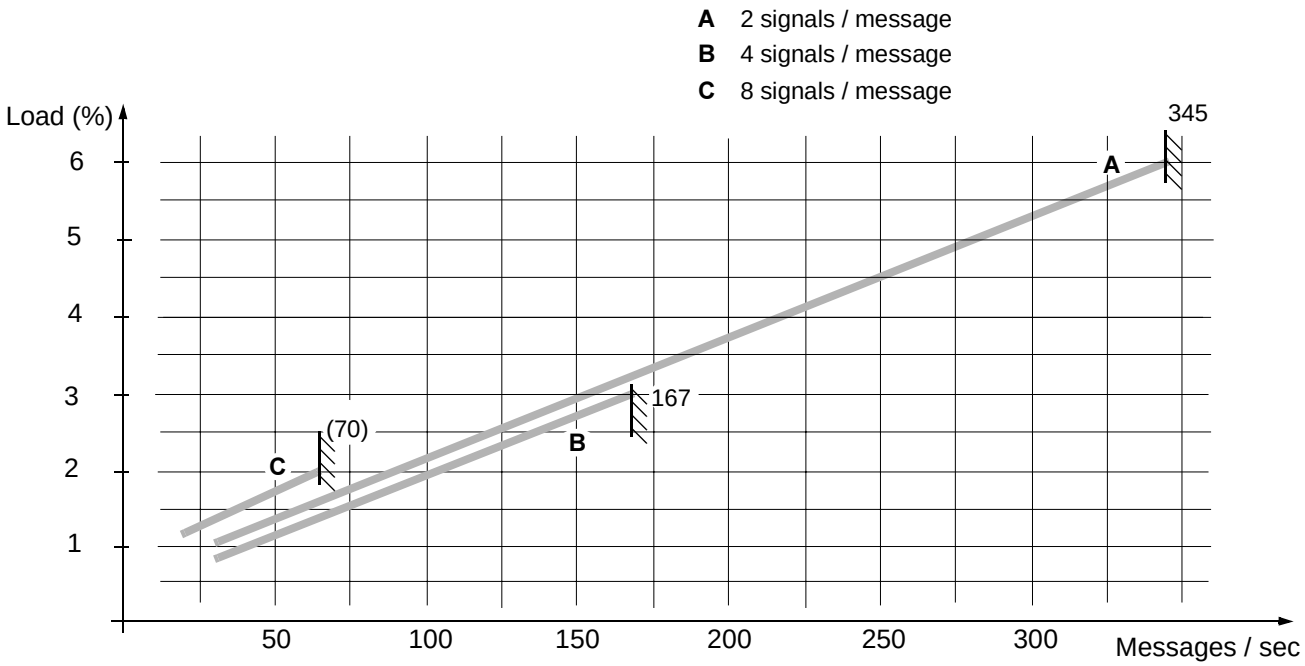

Figure 3-20. Load Caused by EXCOM, 19200 bit/sec.

Performance - Reserve

This is a matter of the disposition of the total CPU load. A reserve of 15 to 20% is recommended. See Section 3.1.14, CPU-optimization, Load Calculation

3.2.1.2 Redundant Processor Modules

Performance

CPU load

The performance of redundant processor modules is reduced to 95% in relation to a single system. Divide all load figures by 0.95.

Upgrading Time

Time required to upgrade the system from SINGLE to DUAL status.

With 8 Mbyte RAM	<90 s

Changeover Time

Typical	5 - 10 ms
Maximum	25 ms

3.2.1.3 Memory

General Technical Data, Capacity

System Software and Application Program

Read write memory RAM (Residing on processor module)	total	8 alt. 16 Mbyte
	available for application program	min. 5.5 alt. 13.5 Mbyte
Battery Backup Time	single CPU system (8 or 16 MByte)	min. 4 hours
	redundant CPU system (after ≥20 h of recharging).	min. 2 hours

System Software Backup

Program card with flash PROM (PCMCIA)

Number of program cards (min. 1)	max. n_1 ($n_1 + n_2 \leq 4$)

Application Program Backup

Optional program card with flash PROM (PCMCIA). Various memory sizes available. Cannot be mixed with System Software Backup in a single program card. Number of program cards.	max. n_2 ($n_1 + n_2 \leq 4$)

Memory Requirement

Use empirical formulae to permit practical estimation of the memory requirement of the different functions. Please refer to Section 3.1.13, Memory Calculation. For detailed information regarding the memory requirements of different PC elements, see the reference manual *PC Elements Advant Controller 400 Series*.

3.2.1.4 System Clock

General Technical Data of the System Clock

Inaccuracy expressed as drift in time (stand-alone system)	max. 0.1 ms/s

When a controller is included in a control network, the clock is synchronized to a master clock, for example the clock in an operator station or a dedicated controller.
The accuracy is then related to the master clock accuracy.

Relative error in time when synchronized via network	max. 3 ms

You can synchronize one or several controllers via external minute pulse signal. The aim is to synchronize to an accurate external clock and, in the case of several controllers, to keep the relative error in time low.

Relative error in time when synchronized via external minute pulse signal	max. 2 ms

Relative time error with time-tagged events, see Section 3.2.3, Process Interface.

The external synchronization input is, from an electrical viewpoint, compliant with PC standards. For data, see Table 3-13 below.

Table 3-13. Clock Synchronization, Electrical Data for Minute Pulse

Data	Value
Input signal (opto coupled input type)	"0" = -50 to + 2 V
	"1" = +12 to + 60 V
Filter time constant	≤1 ms
Pulse length	>10 ms
Triggers at	positive flank

Battery Backup Time	single CPU system (8 or 16 MByte)	min. 4 hours
	redundant CPU system (after ≥20 h of recharging)	min. 2 hours

3.2.2 Power Supply

Current consumption is a complex matter when it comes to a flexible control system concept. For rules for calculation of current consumption and dimensioning of distribution board fusing, see Section 3.1.3, Power Supply.

A quick guide of power consumption to use in a very preliminary phase of work on a project or anytime you need estimated figures for planning purposes follows.
Note that average figures are given. That means:

- Average equipped subracks
- Most common mixture of modules.

In other respects, such as technical data, and so on please refer to separate documentation:

Individual power supply units	Data sheets included in Appendix A, Hardware Modules
Voltage regulator units	*S100 I/O Hardware, Reference Manual*

Table 3-14. Estimated System Power Consumption

Controller and number of I/O subrack	Power consumption cos φ >0.7 (at a.c.)
--	240 W
1	420 W
3	780 W
5	1140 W

Power Supply Interruption

≤10 ms [1] Unaffected operation

>10 ms [1] Safety shutdown.

At battery supply, the Advant Controller is equipped with an energy reservoir to comply with this specification.

3.2.3 Process Interface

3.2.3.1 General Technical Data, Capacity

Event Handling

For each object type, there is a buffer in the controller for event bursts. These buffers have the following capacity:

1. The time limit is valid at lowest permitted supply voltage 19.2 V and maximum load (worst case)

Table 3-15. Size of Buffer for Event Burst

Object type	Buffer size
DI	200 events
AI	40 events
PIDCON	90 events
PIDCONA	90 events
GENOBJ	70 events
MANSTN	30 events
RATIOSTN	30 events
SEQ	30 events
MOTCON, VALVECON, GROUP, MMCX	350 events

If an event burst exceeds the capacity of a buffer, the "lost events" are marked in the data base file and sent to the operator station with time marked "uncertain" when the load decreases.

These events will not be missing in the event and alarm lists if MasterBus 300 is used.

The maximum steady state rate is 2 events/sec.
Momentary event bursts with higher frequency are handled as described above.

Relative time error with time-tagged events:

- Events handled within a controller utilizing S100 I/O or S800 I/O with SOE functionality <2 ms
- Events handled within a controller utilizing S400 I/O 10-100 ms
  (The event is time tagged when the signal arrives at the controller. Time error depends on scanning selected.)
- Events handled within a subordinated autonomous controller (for example Advant Controller 110) <1 ms
  (Events locally time tagged.)
- Events handled within separate controllers Advant Controller 450, Advant Controller 410, Advant Controller 110 (not S400 I/O)
  - With external time synch. [1] <4 ms
  - No external time synch. <5 ms
- For S800 I/O without SOE functionality, the relative time error between events (DI signals) in one controller can be evaluated from the expression:

  Maximum relative time error = a + b + c

  a = scan cycle time of the Fieldbus Communication Interface 5 - 100 ms, not configurable
  b = Cycle time of Advant Fieldbus 100 (set by the user, terminal INSCANT)
  c = scan cycle time of the process data communication in Advant Controller 450 (set by the user, terminal SCANT).

1. "Minute pulse" connected to the actual controllers.

- It is also possible to receive events from Advant Controller 70/110 using Advant Fieldbus 100, or from Advant Controller 55/110 using RCOM/RCOM+. The relative time error between events for different configurations are given in Table 3-16. A condition for the table is that all events are connected to one Advant Controller 410/450.

Table 3-16. Relative Time Errors between Events (DI Signals)

Bus	Events generated by		Relative time error (ms)
	Controller	Module/Calc.	
Advant Fieldbus 100	Advant Controller 110	DI650	<2
	Advant Controller 110	Calculated in AMPL	<2 + Sct (1)
	Advant Controller 70	Calculated in AMPL	<2 + Sct (1)
RCOM/RCOM+	Advant Controller 110	DI650	<50 (2)
	Advant Controller 110	Calculated in AMPL	<50 + Sct (1) (2)
	Advant Controller 55	Calculated in AMPL	<50 + Sct (1) (2)

(1) Sct means scan cycle time of reading I/O signals in the Advant Controller 55, 70 or 110
(2) This value is valid for a fixed RCOM connection where there is a continuous clock synchronization over the bus (at least once per minute). If dial-up phone lines are used the error is also dependent of the elapsed time since the previous call (clock synchronization).

- Event received from LONMARK compliant devices using CI572 or CI573:

  Devices that can use ms accuracy (for example INSUM MCU):

  – If device is time synchronized from AC400 Series with an interval of 1s:10 - 20 ms

  Other types of device: 1 - 2 sec.

For system clock accuracy, see Section 3.2.1.4, System Clock.

3.2.3.2 S100 I/O

General Technical Data, Capacity

Please note that you must consider practical limits when the data below is applied:

- Space in the used cabinet
- CPU load
- Integrity aspects
- Availability aspects.

Table 3-17. Capacity S100 I/O

Data	Value
No. of buses (bus extension)	1 (1)
Near side bus	
No. of "nodes" (I/O subrack and/or optical modems)	max. 5
Total length of el. bus extension cable	max. 12 m (39 ft.)
Far side bus	
Total length of optical bus extension cable	max. 500 m (1640 ft.)
No. of "nodes" (I/O subrack)	max. 5
Total length of el. bus extension cable	max. 12 m (39 ft.)
No. of I/O boards per subrack	max. 20 (2)
No. of DI boards DI signals (3)	48 max. 2300
No. of DO boards DO signals (3)	48 max .1489
No. of AI boards AI signals (3) (4)	32 max. 910
No. of AO boards AO signals (3)	32 max . 963
No. of other board types DSAI 133 (5), DSAI 133A (5) DSAX110, DSAX 110A DSDP 150 DSDP 170 DSDC 111 (6) DSDP 140A (6) (7)	 48 48 4 48 24 24

(1) Single or redundant.
(2) The maximum is 19 when S100 I/O Bus Extension redundancy is used.
(3) This total includes S100 I/O signals, S400 I/O signals and calculated signals.
(4) When any combination of the following analog input boards is used, the total number of analog input channels on these boards is limited to 400:
DSAI 146 with 31 channels. DSAI 151 with 14 channels. DSAI 155A with 14 channels.
(5) A range of modems and connection units are available for the different communication media. See respective communication User's Guide.
(6) DSDC 111 and DSDP 140A occupy two I/O addresses.
(7) The maximum recommended number of DSDP 140A boards is 10.

3.2.3.3 S400 I/O

General Technical Data, Capacity

Please note that you must consider practical limits when the data below is applied, for example:

- Space aspects
- CPU load
- Integrity aspects
- Availability aspects.

Table 3-18. Capacity S400 I/O

Data	Value
No. of buses	max. 7
No. of I/O units per bus (1)	max. 16
No. of DI signals (2)	max. 2300
No. of DO signals (2)	max. 1489
No. of AI signals (2)	max. 910
No. of AO signals (2)	max. 963

(1) Including products like MasterPiece 51, TYRAK L, SAMI, etc.
(2) This total includes S100 I/O signals, S400 I/O signals, S800 I/O signals and calculated signals.

3.2.3.4 S800 I/O

General Technical Data, Capacity

Please note that you must consider practical limits when the data below is applied, for example:

- Space aspects
- CPU load
- Integrity aspects
- Availability aspects.

Table 3-19. Capacity S800 I/O

Data	Value
No. of AF100 buses	max. 8
No. of I/O stations/bus	max. 79/32 (1) (2)
No. of I/O modules per station	max. 24
No. of cluster per station	8 (3)

Table 3-19. Capacity S800 I/O

Data	Value
No. of I/O modules per cluster	12 (3)
No. of DI signals (4)	max. 2300
No. of DO signals (4)	max. 1489
No. of AI signals (4)	max. 910
No. of AO signals (4)	max. 963
No. of DP820 Pulse Counter channels	ca. 1700 (5)

(1) 32 is valid for a twisted pair communication media within a segment.
(2) If other stations than S800 I/O stations are used on the same Advant Fieldbus 100, the maximum number of S800 I/O stations must be reduced with corresponding number of stations.
(3) **Note** that the total number of I/O modules cannot exceed 24.
(4) This total includes S100 I/O signals, S400 I/O signals, S800 I/O signals and calculated signals.
(5) The practical limit depends on number of other PC-elements and theres memory size. Se *PC Element Advant Controller 400 Series Reference manual.*

3.2.4 Communication

3.2.4.1 Provided Link Types

General Technical Data, Capacity

Table 3-20. Provided Link Types, Capacity

Link Type	Number of instances	
MasterBus 300 (executed in main CPU)	max. 2 buses (1)	Tot. max. 2
MasterBus 300E (executed in main CPU)	max. 2 buses(2)	
MasterBus 300 (executed in slave CPU)	max. 6 buses (1)	Tot. max. 6
MasterBus 300E (executed in slave CPU)	max. 6 buses (2)	
Bus Extension to S100 I/O	max. 1 link (Single or redundant.)	
MasterFieldbus	max. 7 buses max. 16 units per bus	

Table 3-20. Provided Link Types, Capacity

Link Type	Number of instances	
Advant Fieldbus 100	max. 8 buses	Tot. max. 8
PROFIBUS-DP	max. 8 buses	
LONWORKS Network	max. 8 buses (3)	
EXCOM	max. 2 links	
V.24/RS-232-C (application of basic physical layer)	max. 1 printer, max. 4 MasterView 320 (4)	
RCOM	max. 9 links	Tot. max. 9 (5)
MVI (available protocol)	max. 9 links	
MVI (free-programmable facility)	max. 9 links	
GCOM	max. 5 links	

(1) You cannot mix MasterBus 300 (executed in main CPU) and MasterBus 300 (executed in slave CPU) within the same controller.
(2) You cannot mix MasterBus 300E (executed in main CPU) and MasterBus 300E (executed in slave CPU) within the same controller.
(3) Max number of communication modules, CI572 or CI573, is four.
(4) Please note that EXCOM, RCOM and MVI also utilize V.24/RS-232-C at the physical layer (electrical interface).
(5) RCOM and MVI (available protocol) use the same type of communication interface CI532Vxx or CI534Vxx.
MVI (free-programmable facility) uses communication interface CI535 or CI538 and GCOM uses CI543.
CI532Vxx, CI534Vxx, CI535 and CI538 have two physical channels each.
The following restrictions are valid:
- No of CI532Vxx +CI534Vxx + CI535 + CI538 + CI543 ≤ 5.
- Max number of physical channels is nine (limit in software).

3.2.4.2 Applied Communication

General Technical Data, Capacity

Normally there are no limits in capacity beyond the limits placed by the actual link for the application. Extended information for certain applications are found below. Regarding the maximum number of links available in Advant Controller 450, you can find information in Section 3.2.4.1, Provided Link Types above. For further technical data such as load data, performance, maximum lengths, for the different links, see separate documentation.

Data Set Peripheral (DSP) with Advant Fieldbus 100

A data set peripheral can hold 1 to 8 DAT values. Each DAT value represents 32 Boolean, or 1 integer (16 or 32 bit), or 1 real number.
Advant Controller 450 can accommodate max 4000 data set peripheral for communication on Advant Fieldbus 100.

Data set peripherals are cyclically transmitted to their respective destinations, with a cycle time selectable in the range 32 ms to 4096 ms.

3.2.5 Process Control

General Technical Data, Capacity

Primarily, an application program for process control is "softly" limited by different considerations like: CPU load, integrity, availability, security, and so on. You can find information on these topics in part elsewhere in this manual. Some key data put "hard" limits on an application program for process control. The main key data are listed below.

Table 3-21. Maximum Numbers, Process Control

Function	Maximum number
I/O signals	See Section 3.2.3, Process Interface
PC programs	99
Levels in structure	9 (practical limit is 4-5)
Control modules for structuring and execution control	See Figure 3-21, Structuring Limits
Functional Units and Group alarm:	
SEQ	173
GENOBJ (GENUSD+GENBIN+GENCON)	528 (in total)
MOTCON+MOTCONI+VALVECON+GROUP +MMCX	595(in total)
PIDCON	234
PIDCONA	203
MANSTN	420
RATIOSTN	330
GRPALARM	151
GRPMEMB	2978
Data transfer and Communication:	
DAT	32000
TEXT	32000

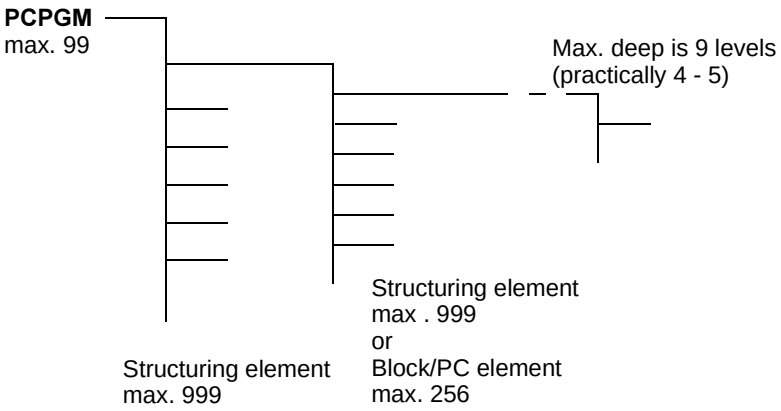

Note 1: Structuring/execution element **CONTRM, SEQ, MASTER**
Structuring/function element **FUNCM, STEP, SLAVE**

Note 2: Maximum 255 structure elements per AMPL cycle time can be used.

Figure 3-21. Structuring Limits

3.2.5.1 Logging

The following table shows the logging capacity of Advant Controller 450. Note, however, that the CPU load and the RAM requirement must also be considered.

Table 3-22. Data Logging Capabilities

Aspect	Limit/Value
Max. no. of logs	15
Max. no. of variables/log	127
Max. no. of storable values/variables (common to all variables in the log)	32767 (The free amount of RAM usually sets a lower limit)
Log sampling intervals (in discrete steps)	1, 2, 3, 4, 5, 6, 10, 12, 15, 20, 30 s 1, 2, 3, 4, 5, 6, 10, 12, 15, 20, 30, min 1, 2, 3, 4, 5, 6, 12, 24 h 1 week

3.2.6 Operator's Interface

3.2.6.1 Local Operator Station

General Technical Data, Capacity

The number of local operator stations is limited to 4.

3.2.6.2 Central Operator Station

General Technical Data, Capacity

The number of operator stations of the types Advant Station 500 Series and MasterView 800/1 is limited to 16.

3.2.6.3 Printer

General Technical Data, Capacity

You can use printers which satisfy the following requirements with Advant Controller 450.

Table 3-23. Printer Data which Must be Fulfilled

Data	Value
Character code	Standard 7 bits ASCII
Parity	None
Number of stop bits	1
Data word length	8 bits
Type of interface	RS-232-C
Baud rate	9600 bits/s
Protocol	X_{ON} /X_{OFF}
No. of characters per line	72
Printer speed	160 characters/s
Limit for X_{off} /Busy	Min. 226 bytes

Signals used and pinning in the communication board CI531 for RS-232-C are shown in Table 3-24.

Table 3-24. Printer Signals, RS-232-C

Pin	Short	Description
1	DCD	Data Carrier Detect
2	RD	Receive Data
3	TD	Transmit Data
4	DTR	Data Terminal Ready
5	GND	Ground
6	DSR	Data Set Ready
7	RTS	Request To send
8	CTS	Clear To Send
9	(RI)	(Ring Indicator)

3.2.7 Availability

The reliability and availability of an Advant Controller 450 and its I/O can be calculated on request. Such a calculation can be adapted to the actual application and it can be extended to include all Advant OCS equipment in an automation system.

3.3 Application Start-up

Not applicable. See Chapter 2, Installation.

3.4 Tutorial

The aim of this section is to give those who are inexperienced in this area a **short guide** through the different phases of a controller design project. There are methods and tools developed to make such project work effective in a variety of aspects. No references are made to methods and tools in this section because that is beyond the scope of this product manual.

Whenever possible, concrete references are made to suitable sections in this manual or to other documentation. The novice reader will preferably read the Introduction (Chapter 1) and Section 3.1, Design Considerations in this manual completely before starting the design work.

3.4.1 Introduction to the Design

The realization of a control system is normally based on a range of different documents. On the highest level, there are Plant Descriptions which give basic and general requirements like:

- Function
- Operation
- Security
- Availability
- Maintenance.

Individual requirements on particular supporting processes like electric, instrument air, cooling, and particular subplants and sections are given in the Plant Design Documents. Here you can also find documents which are the basis of the control system design. Examples of such documents commonly used are:

- Function Descriptions (detailed)
- P&I diagram
- Instrument lists
- Motor lists
- I/O lists
- Applicable standards (plant, domestic, international).

3.4.2 Design Procedures

The following four main stages can be identified in the control system design procedure:

- **System Definition**
  Based on process control application analyses, a definition of the equipment must be made.
  The system definition phase is supported by this manual, especially Chapter 1, which gives an overall introduction from the functional and available resources viewpoints and, of course, Section 3.1, Design Considerations. In addition, Section 3.2, Technical Data Including Capacity & Performance gives some important information.
  The *Advant OCS Product Guide* gives you an overview of the available product alternatives and possible options. Not "every combination" is either practical or offered.
- **Controller System Configuration**
  The controller system configuration is the practical work required to create the infrastructure of the controller, that is the computer resources to maintain the application functions.
  You can regard this phase, more or less, as an installation activity. See Section 2.4.2.4, Controller System Configuration.
- **Configuration/Application Building**
  This phase is, to a certain extent, supported by the same chapters as the system definition phase. However, most information is available in separate reference documents as follows.
  - Configuration and Programming
  - PC Programming
  - PC Elements
  - DB Elements
  - Functional Unit descriptions (adequate parts)
  - Application Examples: Measuring, Feedback Control.

  Please refer to Section 1.5 for further document information.
- **Installation**
  This is not really a design procedure. However, during the design there are certain installation considerations to take care of, for example the connection to the process. It is mentioned here as a reminder.

3.4.2.1 System Definition

System definition in the actual context is a definition of the equipment required.
As a basis of the system definition, it is assumed that superior design stages have resulted in an overall rough application-functional identification. It is further assumed that a scheme of the functional distribution is available. Thus, a rough allocation of functions to different controllers is available.

Main points in the definition of a particular controller are:

- Type of controller to be used, reflecting
  - Security questions such as Hazardous applications, Emergency situations, Abnormal operating situations, Consequences in the event of a failure, Behavior at start/stop, Behavior at maintenance, Manual control.
  - CPU performance
  - Capacity requirements
  - Dependability questions like Availability, Integrity
  - Need for communication (Need for physical interface).
- Type of I/O system
  Centralized or distributed location of I/O is normally determined at prior and superior design stages reflecting such questions as Maintenance, Environment, Economy (cable savings).
- I/O board assortment. Limitation in number of different types is often desirable.
- Physical interface to the process. Terminal blocks, Marshalling, Hazardous applications.
- Application of redundancy.
- Environmental questions. Special requirement of cabinetry.
- Mechanical design. Cabinet lay-out.

When the design work reaches this stage, the hardware and the system software for the controller have been determined. Sufficient information should also be available to permit a controller system configuration. The information should include a rough estimation of application functions needed thus facilitating a dimensioning and disposition of the RAM.

3.4.2.2 Configuration/Application Building

The next step is to make a detailed function identification and to design the application program based on AMPL. Finally, you implement the program.

To sum up, the main activities are:

- Circuit identification with respect to
  - Standard type circuits (typical solutions)
  - User-defined type circuits
  - User-defined circuits
  - User-defined PC element.
- Structuring
- Definition of functional interface to other system
- Execution control work-through
- Design of start-up program which include securing of application dynamic data during power supply disconnection
- Configuration/Implementation
  This is mostly an interactive session using an engineering station.

Some of these activities, subactivities and other similar subjects of interest are dealt with below.

Naming

All global objects are identified (and accessed) by unique names which you define within an application project. Certain objects are given default names by the system, which you can change later. From the system's point of view, the name structure is flat. However, since a name is a visible ASCII string, you can implement any kind of structure in naming objects.

Names are introduced in a controller via data base elements representing the actual object. In general, the designation (connection NAME) on the data base element must be unique in the controller. Designations referred to from an operator station via a Control Network must also be unique in the total process control system connected to that network.

When defining signals, it is important that the signals be given names which are well considered and will not have to be changed at some later stage.

With auto-generation of a PC-diagram, the signal names are printed in the diagram. This is the reason for providing the signals with plain language names, even with a stand-alone controller.

The philosophy behind the naming of the signals is to also be applicable to calculated signals. As an example, the values provided by two level transducers are averaged to give a calculated signal. The physical signals are named LT 104A and LT 104B and the calculated signal is named LT 104.

The designation philosophy for objects in the process control system must be established when the signals are named. (Following relevant standards.) The designations should preferably be hierarchic so that objects and signals are given associative names.

A feedback control loop for level control named LICA 104 (LICA = Level Indication Control Alarm) is an example.
The PID controller object is assigned the name LICA 104 while the actual value (the feedback signal) is suitably designated LT 104 (LT = Level Transmitter) and the controller output value LV 104 (LV = Level Valve). These names are obtained from one of the standards for designations in process industries, ISO 3511.

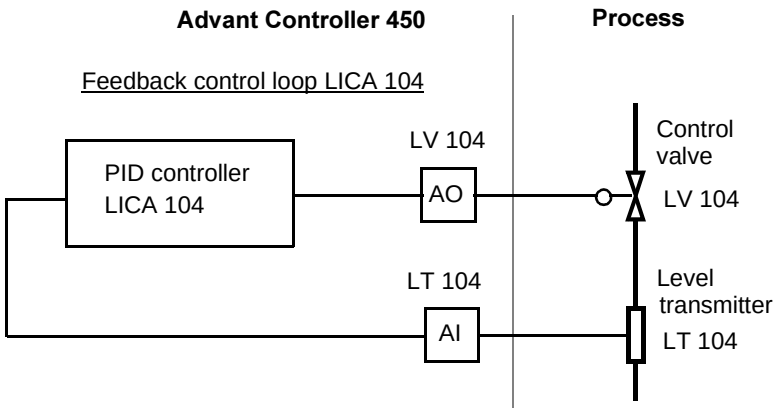

Figure 3-22. Example of Designations in a Feedback Control Loop

Type Circuits

Type circuit building is a very important aid in the configuration procedure. A type circuit is the largest common collection of PC elements which occurs at several places in the application program.

A type circuit can be, for example, a certain type of feedback control loop or a panel control unit with push buttons and lamps. An advantage obtained by working with type circuits is that the work in designing the application program is reduced.

Instead of designing X program parts, one part is designed and used X times at different places, perhaps with the addition of a minor PC element for adaptation in certain cases.

When the function of a type circuit is thoroughly verified in one application, the commissioning of the remainder is much simpler. Another advantage is that the operator's functions based on type circuits become standardized.

Application Building with AMPL

This phase is carefully supported by separate documentation as mentioned earlier. Some general notes and rules regarding application building and structuring are also given in Section 3.1.6.1, Application Building with AMPL, where the subject is dealt with from other vantage points.

Configuration/Implementation

This phase mainly comprises the interactive work carried out with the help of an engineering station, for example Advant Station 100 Series ES connected to the target system. It is supported by separate documentation as well, mostly the reference manual, *AMPL Configuration Advant Controller 400 Series*.
A recommended procedure is "cut" from that document:

1. Make a copy of the original user diskette. The original is supplied together with the engineering station.
2. Activate the MasterBus 300, RCOM, GCOM and MultiVendor Interface that are to be included in the system.
3. Dimension the data base.
4. Populate the data base.
5. Dump the data base.
6. Restart the controller for configuration and load the data base dump.
7. Dimension the space for the PC program.
8. Build the PC program. (In this context, the input of the program.)
9. Make a backup of the entire system.

NOTE

The command files that control the menu handling functions in the engineering station are stored on the user diskette.

3.5 Application Procedures

For information on how to achieve an application function from a configuration viewpoint, please see separate manuals. A summary of available documentation is given in Section 1.5 Related Documentation.

3.6 Configuration/Application Building Menus

Please refer to the separate reference manual, *AMPL Configuration Advant Controller 400 Series*.

Chapter 4 Runtime Operation

4.1 Product Operation

4.1.1 Working Modes

Advant Controller 410/450 has four working modes:
OPERATION, CONFIGURATION, STOPPED and OFFLINE.

The LED display on the processor module front indicates the working mode with the codes P1, P2, -3 and -4, respectively.

P1, working mode OPERATION:

The processor module executes the application program. This is the normal status of an Advant Controller. The system can then perform control tasks and control the process outputs.

P2, working mode CONFIGURATION:

The processor module does not execute the application program.
You can configure the controller system and the application program.

-3, working mode STOPPED:

The processor module does not execute at all.
The main CPU performs self-tests to check some basic controller functions.
The process outputs have defined states (zero).

-4, working mode OFFLINE:

The processor module executes low-level fault-tracing commands only.
Usually performed by ABB personnel.
The process outputs have defined states (zero).

During the boot phase and during the time of transition between certain working modes the display will indicate **intermediate states** with the help of a sequence of special codes.
These codes are relevant at fault finding and system analyses by ABB personnel only.

Additional Information for Redundant Processor Modules

Redundant processor modules are two individual processor modules PM511. When the system is operating, one of these is always chosen to function as PRIMARY, while the other unit, assuming that it is installed and error-free, serves as the BACKUP.

The primary unit provides the same working modes and performs the same functions as an Advant Controller 450 with a single processor module (that is without redundancy).

During operation, the LED displays on the front of the processor modules are used to provide information regarding the modes in which the processor modules are executing.
The primary unit's display reflects the system's working mode P1, P2, -3 or -4 (see above).

The backup unit functions in parallel with the primary unit in any of the following working modes:
STANDBY, UPGRADING, STOPPED and OFFLINE.

The LED display on the BACKUP processor module front indicates the working mode with the codes
b1, b2, -3 or -4.

b1, working mode STANDBY:

The backup unit is synchronized and ready to resume control of the system should the primary unit malfunction.
In this mode, the DUAL LEDs on the front of both processor modules lights.

b2, working mode UPGRADING:

The backup unit is about to be synchronized with the primary unit. A few seconds (<90) after the "b2" is displayed, the display normally reads "b1" (STANDBY).

-3, working mode STOPPED:

Corresponds to the primary unit, see above.

-4, working mode OFFLINE:

Corresponds to the primary unit, see above.

4.1.2 Ordering Working Modes

You order working modes in either of the following ways:

- Use a start mode.
- Use Advant Station 100 Series ES commands.

Please see the following sections.

4.1.3 Start Modes

The Processor Module PM511 has a start mode selector with four positions:



Figure 4-1. Start Mode Selector

The controller reads and utilizes the start mode selector position at the following occasions:

- When you press the ENTER button on the processor module front.
- At power-up.

1 (AUTO):

Warm start, that is the application program is restarted.

If the controller was in the working mode CONFIGURATION, it remains in the working mode CONFIGURATION.

If the controller was in the working mode OPERATION, it remains in the working mode OPERATION.

2 (STOP):

Go to the working mode STOPPED.

3 (CLEAR):

Cold start, that is clear RAM (controller system configuration and application program are erased).
The controller goes to the working mode CONFIGURATION.

4 (OFFLINE):

Go to the working mode OFFLINE.

Additional Information for Redundant Processor Modules

The position of the start mode selector also determines the allocation of the primary and backup processor modules. See the following section, Section 4.1.4, Primary and Backup Processor Module.

4.1.4 Primary and Backup Processor Module

Method of Selection

During initialization of a system including redundant processor modules, one of the processor modules is automatically selected as PRIMARY, while the other becomes BACKUP.
The respective processor modules subsequently assume working modes which correspond to those entered by means of the start mode selector on each module.
The system selects the primary unit according to the following priorities (with regard to the switch settings):

1. 1 (AUTO)
2. 3 (CLEAR)
3. 4 (OFFLINE)
4. 2 (STOP).

The processor module whose start mode selector switch is set to 1 (AUTO) is selected as the primary unit. If both processor modules are set to 1 (AUTO), then the left unit (seen from the front of the subrack) is selected as the primary unit.
If neither switch is set to 1 (AUTO), the one whose switch is set to the 3 (CLEAR) position will be primary. If both processor modules are set to 3 (CLEAR) then the left unit will be primary unit. If no processor module's switch is set to 1 (AUTO) or 3 (CLEAR), then the processor module whose switch is set to 4 (OFFLINE) is chosen.

The backup unit selects its working mode in accordance with information given in the succeeding sections.

Manual Selection

In order to ensure manually that a given processor module will be PRIMARY, you can follow the sample procedure below:

1. Set the other processor module's start mode selector to 2 (STOP) before initialization.
2. Press the initialization button on the desired primary unit (ENTER).
3. When the system begins to operate, turn the switch on the backup unit to the same position as the primary unit's switch (normally AUTO).
4. Restart the backup unit (ENTER).

4.1.5 Relations between Start Modes and Working Modes

The relation between start modes and working modes is described in figures as follows:

- First power-up (the system has never been configured), see Figure 4-2.
- Power-up of controller which contains application, see Figure 4-3.

4.1.5.1 First Power-up

Starting-point: Uninitialized controller, for example
newly delivered controller, or controller without memory backup voltage.

Event : Power-up

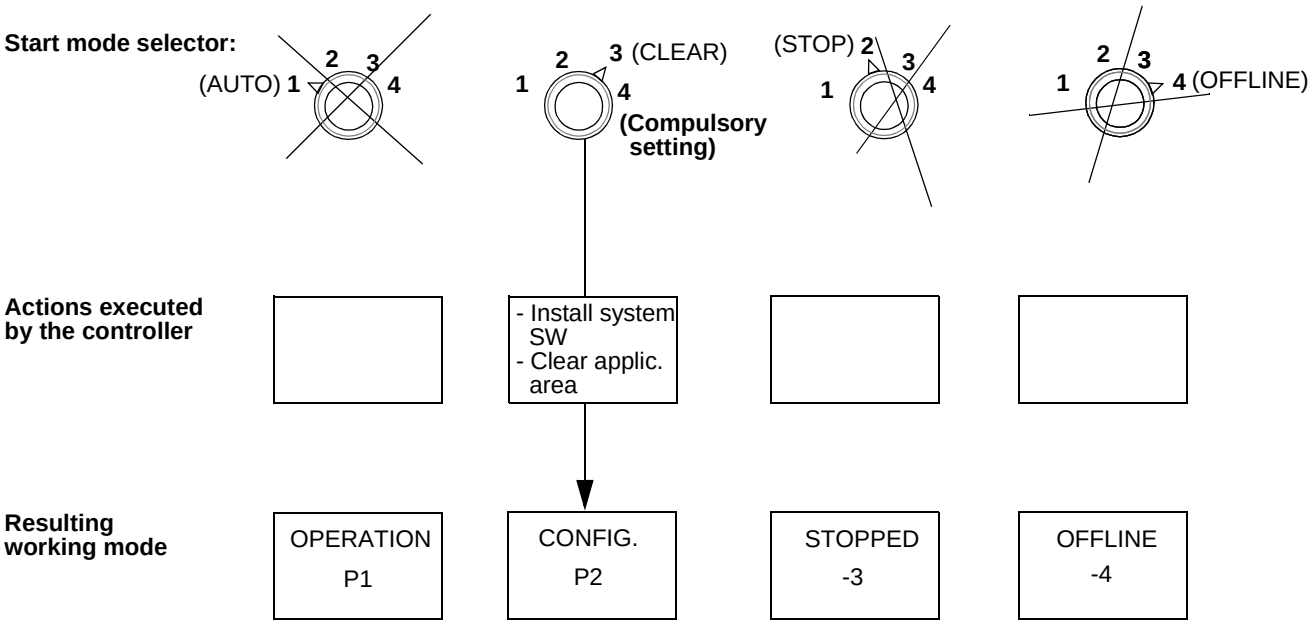

Figure 4-2. First Power-up

Additional Information for Redundant Processor Modules

Please find above information relevant to the primary unit.
Normally the backup unit has the same start mode selector setting.
Set 3 (CLEAR) on both processor modules, then the left module is PRIMARY.
Resulting working modes:

PRIMARY	P2 CONFIGURATION
BACKUP	Start in b2 UPGRADING and then transition to b1 STANDBY

4.1.5.2 Power-up and Initialization of Controller which Contains Application

Starting-point: Controller containing an application,
in working mode **OP**ERATION or **CON**FIGURATION.

Event : --Power fail/power disconnection and subsequent power-up
--User presses ENTER button

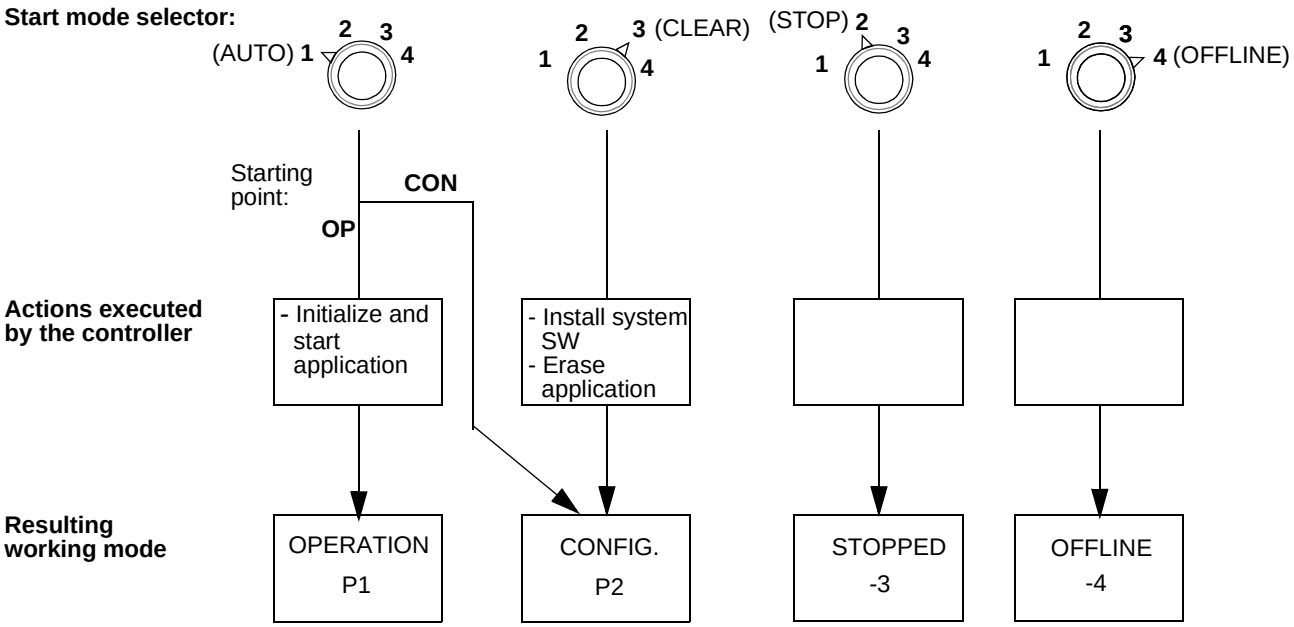

Figure 4-3. Power-up of Controller which Contains Application

Additional Information for Redundant Processor Modules

Please find above information relevant to the primary processor module. In Table 4-1 you can find the resulting working mode for a backup processor module when power fails or when power is disconnected and then switched on again.

If you want to manually restart a controller with redundant processor modules it should be done in single mode. Make the following steps. The one processor module which is primary/backup is denoted primary/backup all through.

1. Stop the backup
   a. Set the start mode selector on the backup module in position 2 (STOP)
   b. Depress the ENTER button on the backup
2. Depress ENTER on the primary module. Wait for indication P1 or P2.
3. Start the backup module
   a. Set the start mode selector on the backup module in the same position as the primary
   b. Depress the ENTER button on the backup

Table 4-1. Working Modes at Power Up of Redundant Processor Modules

Start mode selection		Resulting working mode	
Primary	**Backup**	**Primary**	**Backup**
1 (AUTO)	1 (AUTO)	See Figure 4-3	The backup unit starts in UPGRADING mode (b2) and switches over to STANDBY (b1), <90 sec. LED DUAL turns on (both processor modules)
3 (CLEAR)	3 (CLEAR)		The backup unit starts in UPGRADING mode (b2) and switches over to STANDBY (b1), <90 sec. LED DUAL turns on (both processor modules)
No significance	2 (STOP)		STOPPED (-3)
No significance	4 (OFFLINE)		OFFLINE (-4)

4.1.6 Relations between Engineering Station Commands and Working Modes

The following engineering station commands order working mode transitions.

DICONFIG - Disable working mode CONFIGURATION:

Orders the controller from working mode CONFIGURATION to working mode OPERATION.
See Figure 4-4.

ECONFIG - Enable working mode CONFIGURATION:

Orders the controller from working mode OPERATION to working mode CONFIGURATION.
See Figure 4-5.

RECONFIG - Reconfigure the controller:

Clears the RAM, that is erases the whole application, and orders the controller to working mode CONFIGURATION. (Also called COLD START.)
See Figure 4-6.

4.1.6.1 DICONFIG

Starting-point: Controller executing in working mode CONFIGURATION

Event : User enters engineering station command DICONFIG

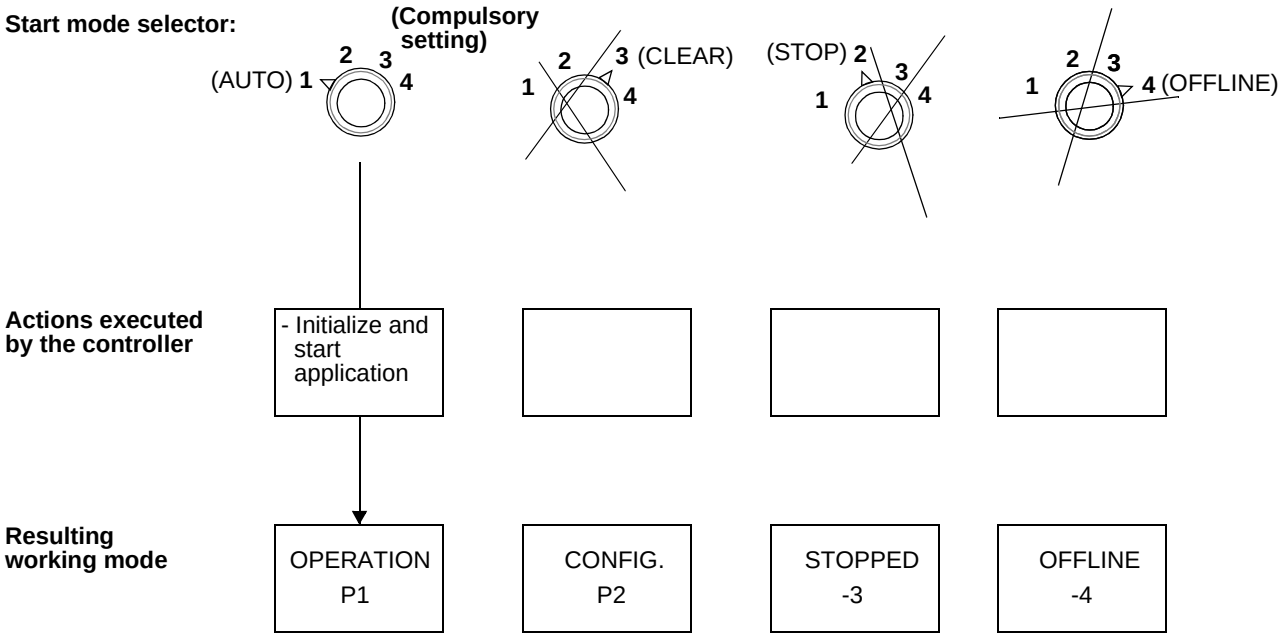

Figure 4-4. Working Mode Caused by DICONFIG

Additional Information for Redundant Processor Modules

Please find above information relevant to the primary unit.
Normally the backup unit has the same start mode selector setting.
Then the sequence of working modes is:

PRIMARY P2 CONFIGURATION ⇒ P1 OPERATION
BACKUP b1 STANDBY ⇒ b2 UPGRADING ⇒ b1 STANDBY

LEDs DUAL turned on (both processor modules).

4.1.6.2 ECONFIG

Starting-point: Controller executing in working mode OPERATION

Event : User enters engineering station command ECONFIG

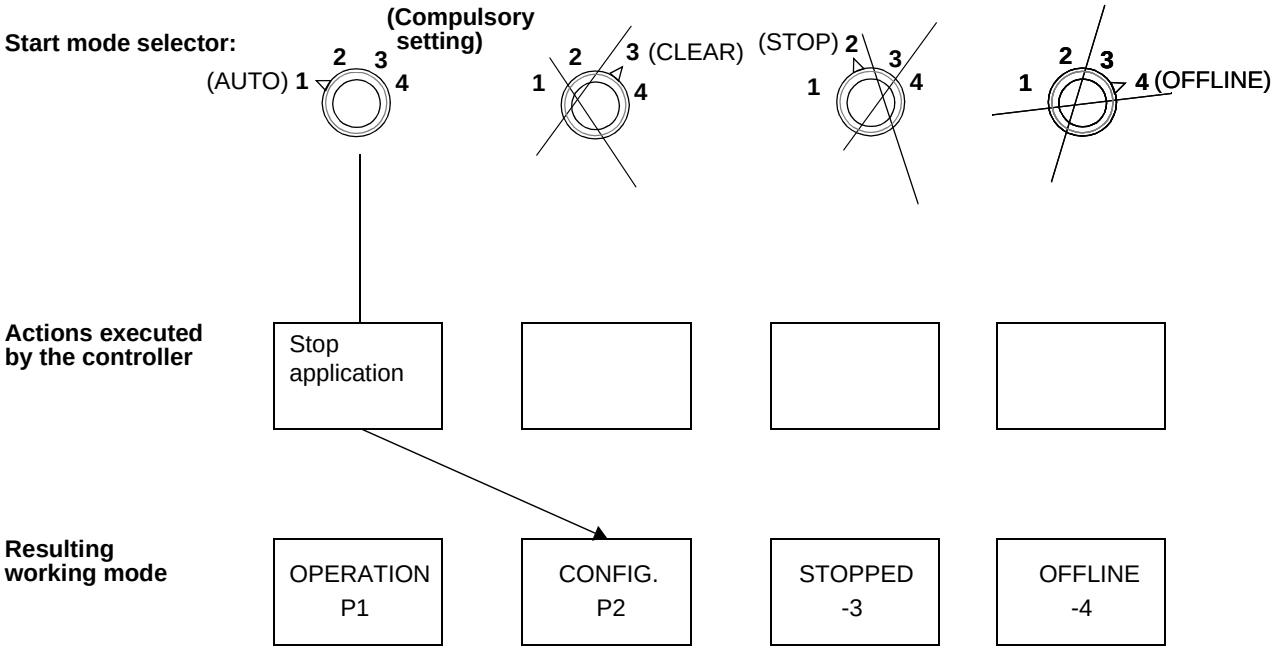

Figure 4-5. Working Mode Caused by ECONFIG

Additional Information for Redundant Processor Modules

Please find above information relevant to the primary unit.
Normally the backup unit has the same start mode selector setting.
Then the sequence of working modes is:

PRIMARY P1 OPERATION ⇒ P2 CONFIGURATION
BACKUP b1 STANDBY ⇒ b2 UPGRADING ⇒ b1 STANDBY

LEDs DUAL turned on (both processor modules).

4.1.6.3 RECONFIG

Starting-point: Controller executing in working mode CONFIGURATION

Event : User enters engineering station command RECONFIG

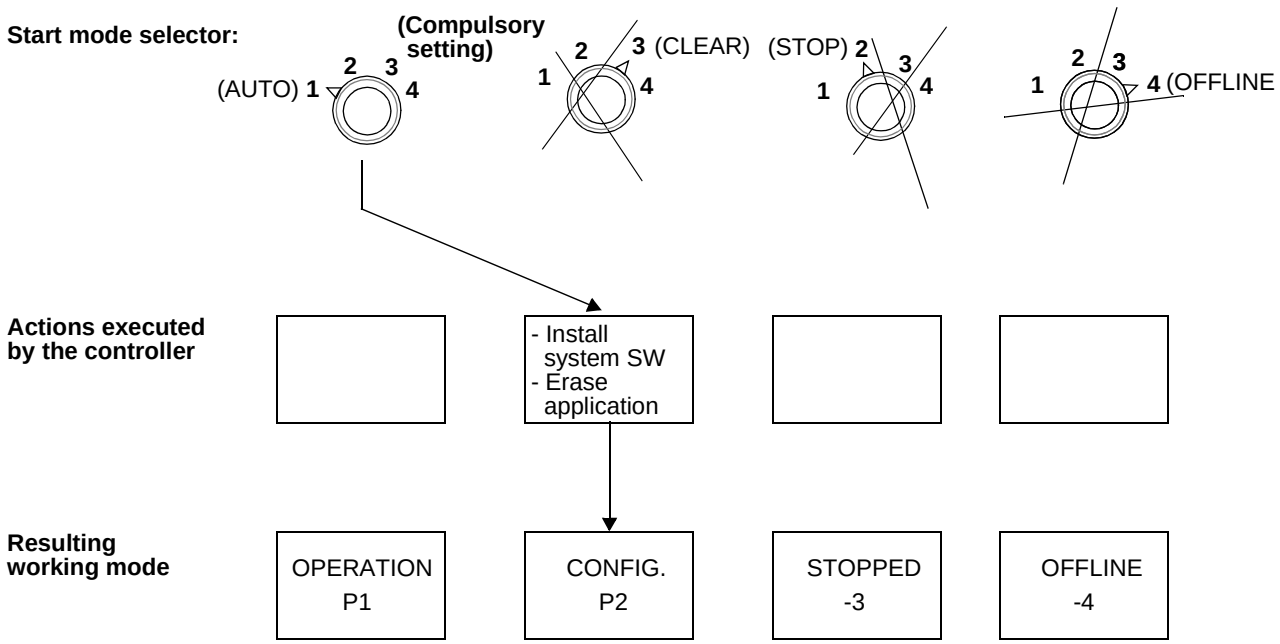

Figure 4-6. Working Mode Caused by RECONFIG

Additional Information for Redundant Processor Modules

Please find above information relevant to the primary unit.
Normally the backup unit has the same start mode selector setting.
Then the sequence of working modes is:

PRIMARY P2 CONFIGURATION
BACKUP b1 STANDBY ⇒ b2 UPGRADING ⇒ b1 STANDBY

LEDs DUAL turned on (both processor modules).

4.1.7 Programmed Start

In Advant Controller 450, you can determine how the process control is to start up and how the system is to start after a mains voltage failure.

You can make these determinations with parameters in a data base element (START) and with a PC program for programmed start-up. In the PC program, you can define how the process is to start (by controlling the inputs on the execution units which control the process). Start module and time limits and start method for the restart alternative are defined in the data base element.

For a detailed description of the start-up function, see the reference manual *AMPL Configuration Advant Controller 400 Series*.

A redundant processor module does not complicate the application and the operation. The information given in the previous sections are applied.

See the overview of the start functions below.

Figure 4-7 is an overview of programmed start at power-fail - power-up.

Figure 4-8 describes programmed start at AUTO - ENTER (when you push the ENTER button while the start mode selector on the processor module front is in the AUTO position).

Figure 4-9 describes programmed start at DICONFIG.

Programmed Start at Power-fail - Power-up

Starting-point: Controller containing an application and executing in working mode **OP**ERATION or **CON**FIGURATION

Event : Power-fail - Power-up

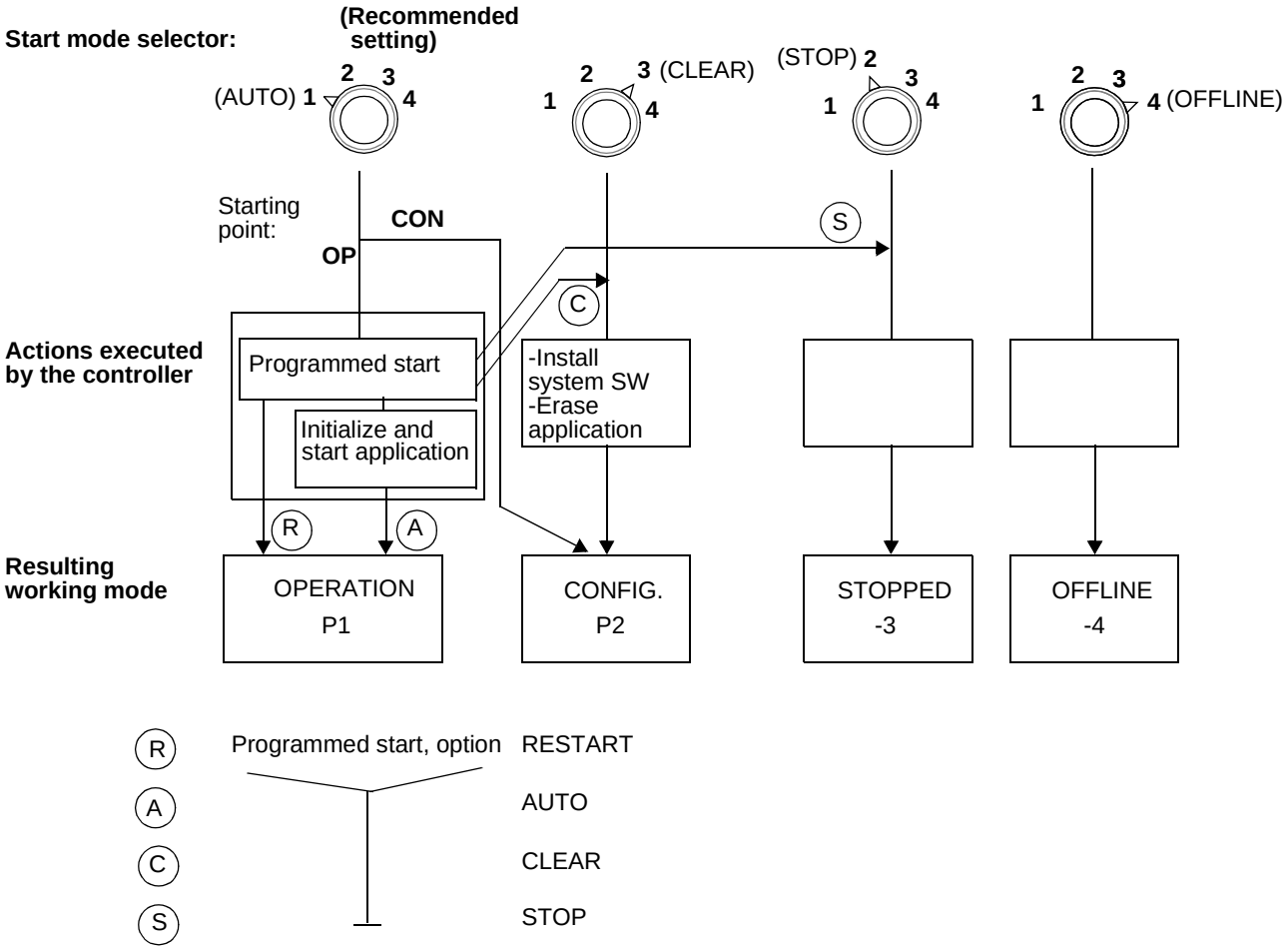

Figure 4-7. Programmed Start at Power-fail - Power-up

Programmed Start at AUTO - ENTER

Starting-point: Controller executing in working mode OPERATION

Event : User presses ENTER button

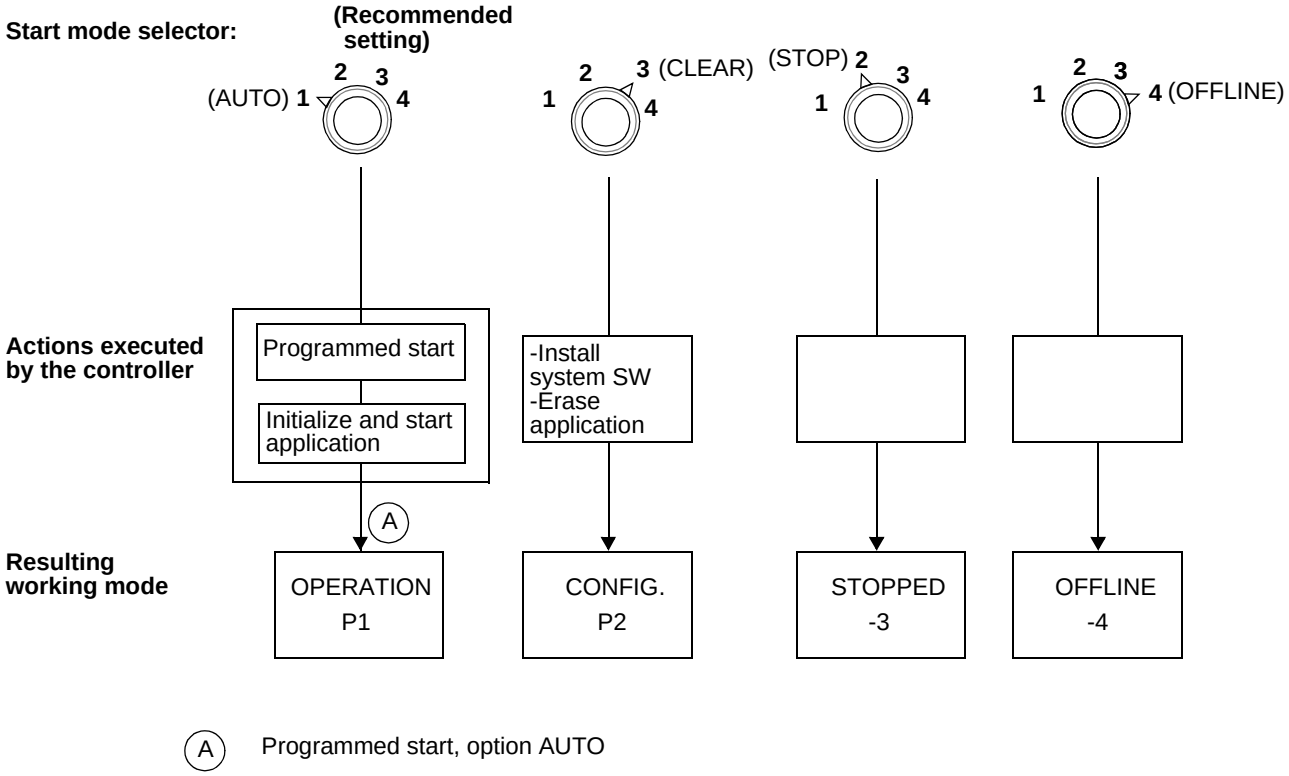

(A) Programmed start, option AUTO

Figure 4-8. Programmed Start at AUTO - ENTER

Programmed Start at DICONFIG

Starting-point: Controller executing in working mode CONFIGURATION

Event : User enters engineering station command DICONFIG

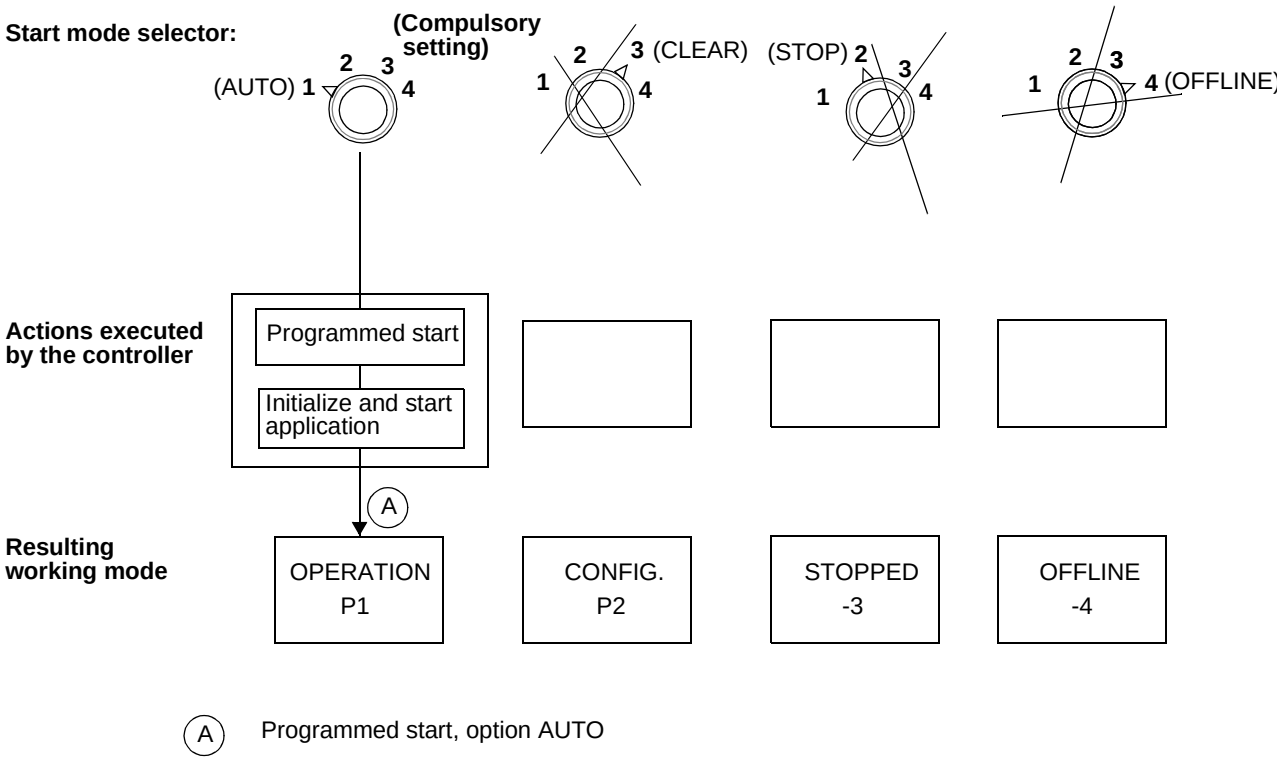

(A) Programmed start, option AUTO

Figure 4-9. Programmed Start at DICONFIG

4.1.8 System Program

You can divide the software in an Advant Controller 450 into system programs and application programs (PC programs). A system program provides internal program functions and links together the application program with the system hardware.

Figure 4-10 presents broadly the interrelation between application programs, system programs and the hardware. The application programs are built up and edited with an engineering station with the support of a special program in the Advant Controller.

The execution of the PC program modules in the application program is organized by the interpreter which also handles certain program amendments, primarily those performed during execution.
Process I/O data is exchanged with the data base via the software for process communication, which works in turn directly with the S100 I/O boards and with the communication units on the MasterFieldbus, Advant Fieldbus 100, and so on.

Pulse counting/frequency measurement, positioning, weighing, free-programmable board, connection of thyristor converter with analog speed control and communication with "intelligent" transducers are implemented as direct interaction between PC elements and the different circuit boards. MasterView 320 mainly works with the data base but receives, for event printout, information directly from PC elements.

Transverse communication on MasterBus 300 works with the data base and the communication units. The programs for central operator stations (MasterView 800/1, Advant Station 500 Series, and so on) work principally with the data base, but can also receive events and data from PC programs and the process communication.

The printer function receives data directly from the PC element PRINT but can also receive information from another node via the communication software.

Information Management Stations interact, via GCOM, with the data base and can also receive data via Data Set. Trend data logs are transmitted cyclically from the controller.

EXCOM works with the data base and can exchange information with another node via, for example MasterBus 300.

Long-distance communication RCOM and communication via MultiVendor Interface interact with the data base and the communication units. The protocol from the communication named above is implemented on the different boards.

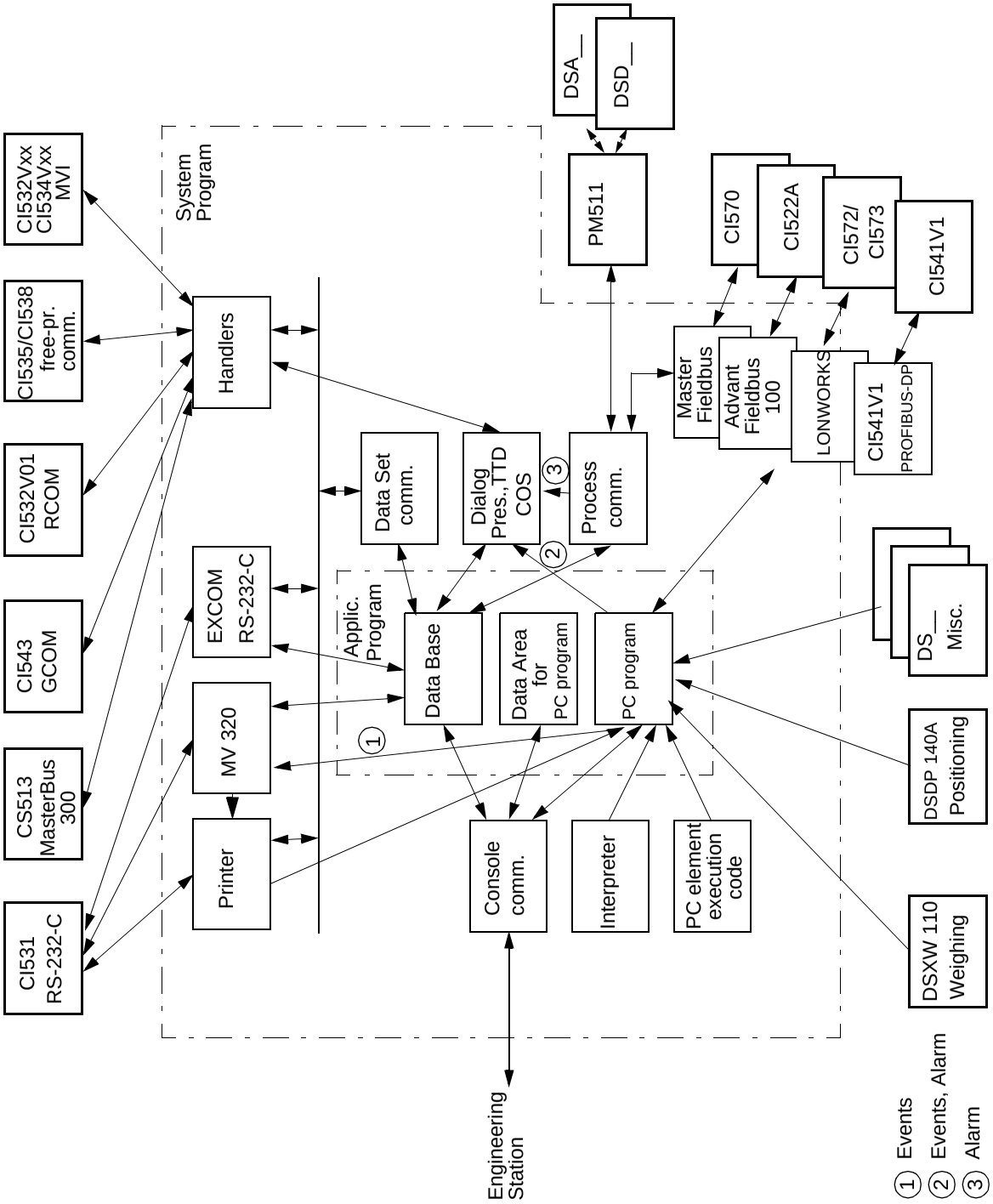

Figure 4-10. Advant Controller 450 - Survey of Software System

4.1.8.1 Operating System

Figure 4-11 shows in more detail the internal interrelation between the processor module parts and the operating system.
The part of the program in the operating system which is responsible for all allocation of priority, start and supervision of the different program functions is called the kernel. It is also responsible for that part of the data exchange between the different program modules which is not performed in the data base.
The kernel also organizes interrupts at regular intervals for the cyclic execution, for example from DI and communication boards and from the interval clock to activate, for example, the interpreter.

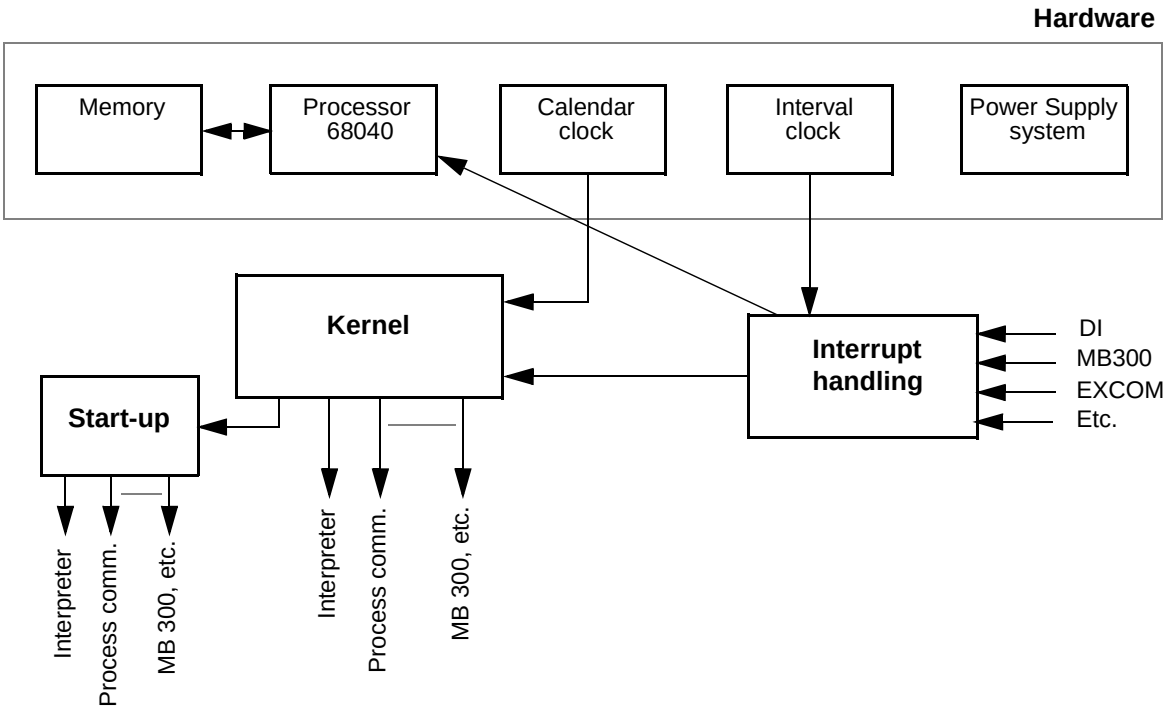

Figure 4-11. Survey of Processor Module and Operating System

4.1.8.2 Process Communication

An Advant Controller 450 normally exchanges signals with a process via inputs and outputs. Current data for these units is stored in the data base. Data consists of parameters for each board such as board address. The PC program can read, for each channel on a board, information such as the channel value, if there is any blocking of the data value, and so on. A PC program normally utilizes the actual value of the signal.

Reading data in and out, between process and data base, is performed by the module for process communication. For the most important types of input and output boards, this is performed in accordance with the following:

DI:

Each digital input board (this applies to most types) monitors the channels for changes in value. If there is any change, an interrupt signal is transmitted to the processor and the kernel starts the program for reading in the new measured value for storage in the data base.
Digital input boards can also be read cyclically. All channels on the board are then read and the new values are stored in the data base.

AI:

Each channel on an analog input board is read cyclically. The cycle time, which can be set individually, is stored in the data base. For temperature measurement boards (Pt100 and thermocouple boards), the conversion is started cyclically. When the conversion is completed, the board generates an interrupt. The inputs are handled so that the measurement signal is filtered and converted to process-related units. The limits are checked and then stored in the data base. The reading is normally performed synchronous with the execution of PC modules with the same cycle time.

DO:

Each time an execution unit in a PC program is executed, the value at the output is stored in the data base. If a change has occurred since the preceding execution, a read-out program for read-out to the digital output board is started.

AO:

Analog outputs are processed in the same way as digital outputs. Process-related units must first, however, be converted to digital values within the range of the D/A-convertor. You can select either current or voltage with solder straps on the connection unit. In the case of boards with expanded supervision (DSAX 110), the analog output value is read back to permit a comparison with the database value.

4.1.8.3 Diagnostics for the System Program

When an engineering station is connected to an Advant Controller, you can analyze the reason for the stoppage, the status of the internal communication channels, and so on. You can also use the engineering station for fault-tracing in the application program. For a detailed description of the different commands used for this purpose, see the reference manual *AMPL Configuration Advant Controller 400 Series*.

4.1.9 Application Program

You can divide the software in an Advant Controller 450 into system programs and application programs. The application program is written in a high-level language AMPL. A user normally only comes in contact with AMPL and definition of parameters for data base elements.

The application program consists of one or more PC programs and the data base.

4.1.9.1 Data Base

The data base in an Advant Controller 450 is a structured storage form for data which can be used by several different internal program modules. For example, for all analog inputs, there is structured data which stores the value, scale factors, limits, unit, deadband, and so on.

The data base is used, above all, for process I/O and functional units and is handled as DB elements.

The data base contains data for, for example, the following functions.

- Input and output boards:
  - Analog input boards (AI)
    For standard current and voltage signals.
    For temperature measurement.
  - Analog output boards (AO)
  - Digital input boards (DI)
  - Digital output boards (DO)
  - Pulse counter boards.
- Parameters for S100 I/O Bus Extension, MasterFieldbus, Advant Fieldbus100, MasterBus 300, printers, EXCOM and GCOM.
- Data and text exchange between PC programs within an installation or between PC programs in several installations.
- Description of the data to be transmitted on MasterBus 300 and to external computers via EXCOM, RCOM and MultiVendor Interface.
- Data for displays on MasterView 320.
- Data for the different objects, functional units, which can be shown in a central operator station (Advant Station 500 OS or MasterView 800/1).
  - Sequences
  - Process controllers
  - Manual control stations
  - Ratio stations
  - General objects
  - Motor-, valve- and group start object.

4.1.9.2 Data Area for PC Programs

Each PC program is provided with a local data area for storage of variable values.

4.1.9.3 PC Program

You can divide a control task into a number of functional sections. The division is performed primarily in accordance with the functional structure of the control task and can also be in accordance with the requirement of different cycle times in the process. A PC program can accordingly be divided into function modules and several execution units, which in turn consist of PC elements.

Each execution unit can be given its own periodicity and its own execution conditions for connection and disconnection.

PC elements are the smallest "building blocks" in a PC program. They are described in detail in the manual PC Elements. As an example, Figure 4-12 shows the graphical symbol for the PC element FUNG-1V, a function generator. The figure also gives a rough outline of the supporting elements for the break-points of the desired function (curve).
Figure 4-13 shows the desired application function.

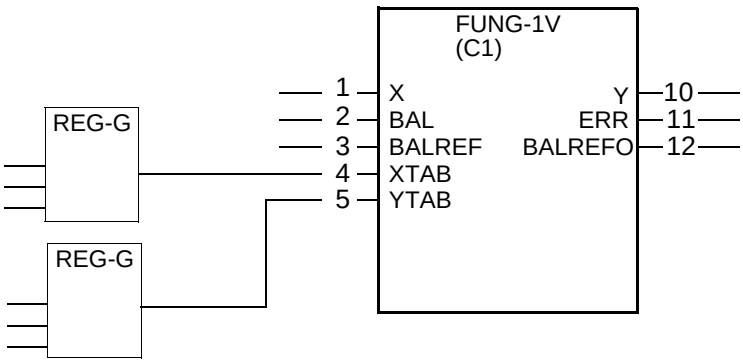

Figure 4-12. Example of PC Element: FUNG-1V

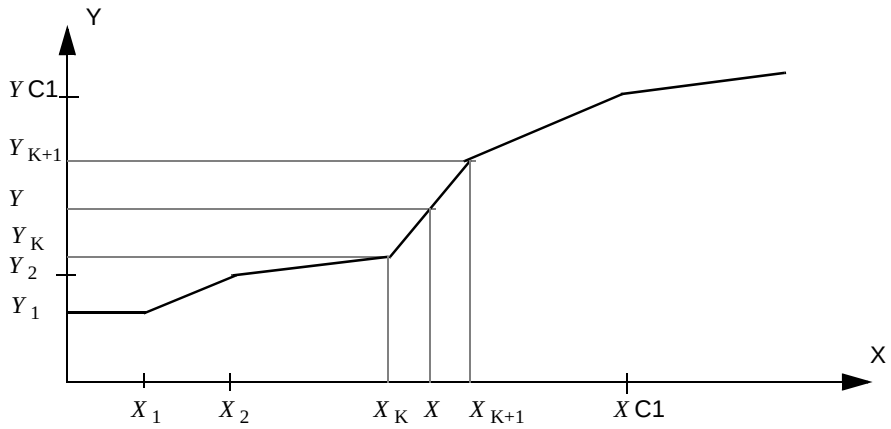

Interpolation is performed in accordance with the equation below:

$$Y = Y_K + \frac{X - X_K}{X_{K+1} - X_K} \times (Y_{K+1} + Y_K)$$

Figure 4-13. Example of Function Performed by FUNG-1V

4.1.10 Execution

The execution is organized by the interpreter which, in accordance with the PC program, calls the correct code for the PC element concerned from the library of PC elements.

4.1.10.1 Interpreter

The interpreter is a system program which organizes the execution of the different program modules with the periodicity required. The interpreter also checks if any unit is blocked, if the RESET of any unit is activated, and so on. In an Advant Controller 450, there is a large difference between the shortest and the longest possible cycle times.
Cycle times of 5 ms and 32 s can be used in one and the same system. Normally, with no reconfiguration, the cycle times are between 10 ms and 2 s. An internal allocation of priorities is therefore necessary. The system has three interpreters designated A, B and C.
A has the highest priority and C the lowest (see Figure 4-14 below).

The standard cycle times obtained are given in the figure. For a more detailed description of the configuration of cycle times, see the manual *AMPL Configuration.*

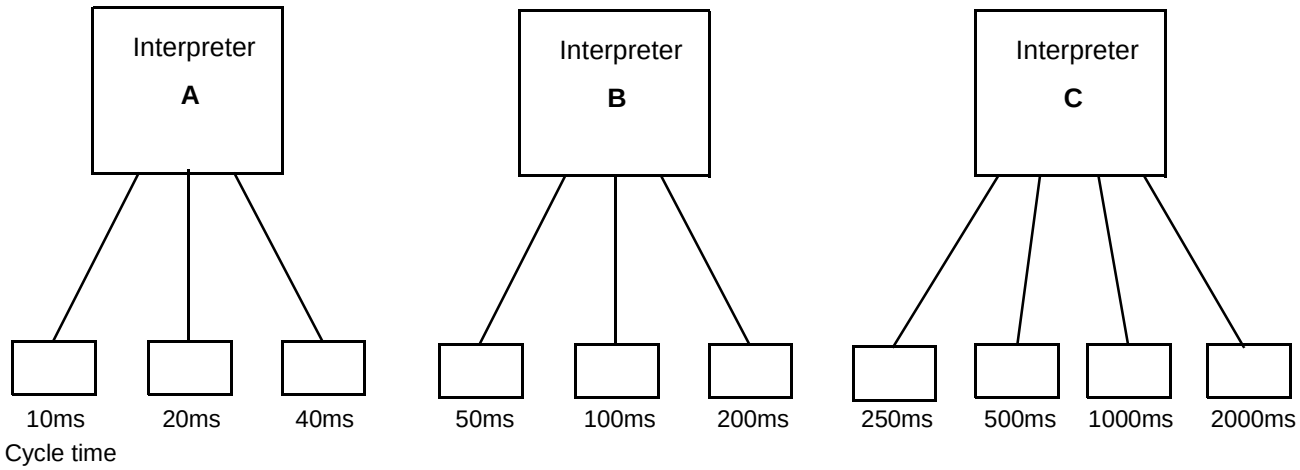

Figure 4-14. Interpreters

The allocation of priorities to the interpreters means that the execution of PC elements with cycle times associated with interpreter C can be interrupted for the execution of PC elements with cycle times associated with the interpreters A and B. The execution of PC elements with cycle times associated with interpreter B can, however, only be interrupted by the execution of PC elements with cycle times associated with interpreter A. The execution of PC elements which are associated with interpreter A cannot be interrupted by the execution of other PC elements.

4.1.10.2 Execution Sequence within an Execution Unit

When the cycle time and the start conditions for an execution unit are satisfied, the following takes place:

- All input data stored in the data base for the PC element included in the execution unit is read into the local data area.
  To get close synchronization between I/O scanning and PC execution a common interpreter is used. See Section 4.1.10.7, Scanning of Process Inputs.
- The program codes of the PC element within the execution unit are executed.
- Data from the local data area is read out to the data base for the output variables which store their values in the data base.

4.1.10.3 Sequence of Execution of Execution Units

In certain applications, the order in which execution units are executed is of interest. Assume that a function is divided into execution units which exchange data with each other and that these units have the same cycle time, see Figure 4-15.
It is also assumed that execution unit 1 is required to execute before unit 2.

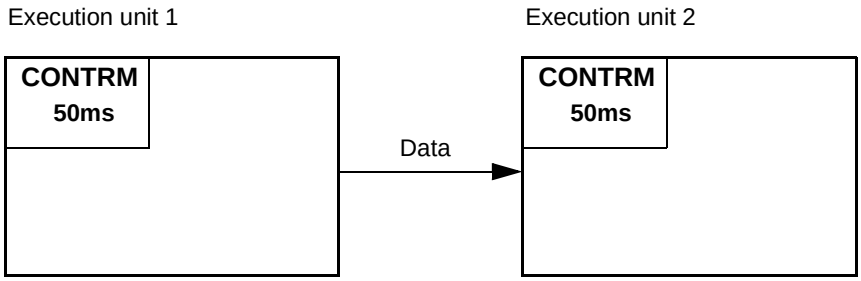

Figure 4-15. Function consisting of two Execution Units

When the conditions for an execution unit are defined, it is possible, with the call parameter "Place in the cycle table," to specify a place number between 1 and 255. This place number specifies the order in which the execution units are executed during the same cycle time.
If, in the example, the place number 1 is specified for the execution unit 1 and the place number 2 is specified for unit 2, the required function is obtained.

The different execution units may well belong to different PC programs, but they must all have the same cycle time. For units with different cycle times, there is no defined sequence.
A required start sequence can, however, be obtained by controlling the start conditions for the execution units included.

4.1.10.4 Execution Sequence for an Individual PC Element

The execution sequence within a PC element is illustrated in Figure 4-16 by an AND-gate with two inputs.

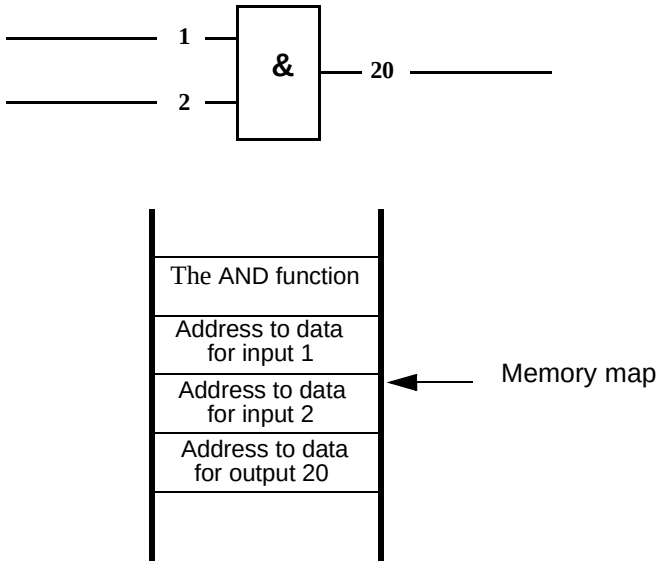

Figure 4-16. Order of Execution for PC Elements, AND Gate with two Inputs

The order of execution is:

- The interpreter reads function type, in this case AND, and selects the program code for the function AND from the element library.
- Current values at the storage places pointed out by inputs 1 and 2 are read and the logical AND-condition is formed with the help of the program code AND.
- The result is stored at the storage place specified for output 20.

The interpreter then resumes control and searches for the next PC element to be executed.

4.1.10.5 Execution Sequence of PC Elements

After the execution of the function of a particular execution unit and after the reading-in phase, the execution of the PC elements included begins. This is performed, element by element, in the order in which they are entered at program entry, which also corresponds to the order of documentation.

In the following example, which is a printout from the command LTREE, the elements are executed in accordance with the broken arrows. See Figure 4-17.

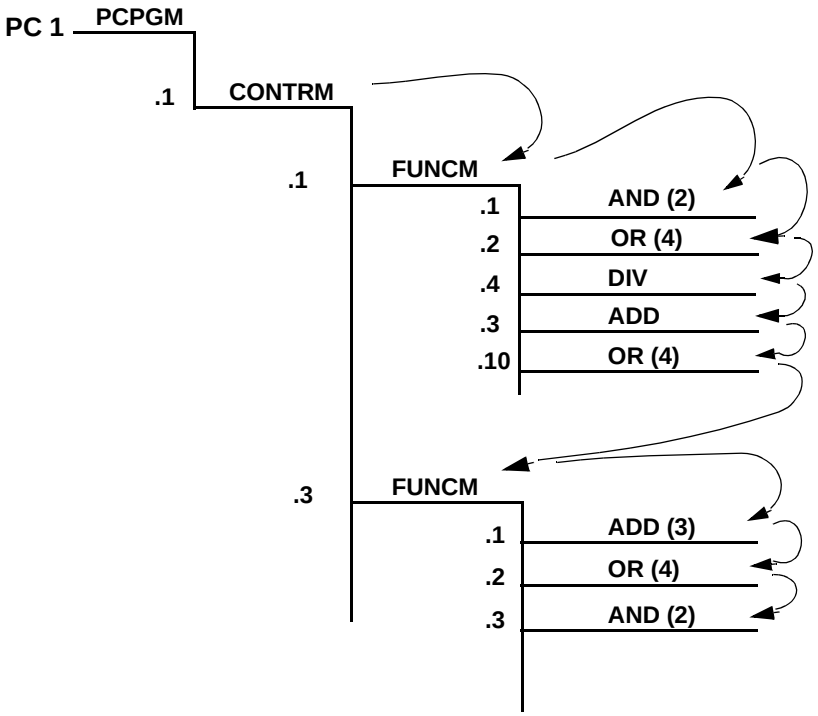

Figure 4-17. Printout from the Command LTREE

Note that the item designations of the individual PC elements have no effect on the order of execution. The PC element DIV with item designation PC1.1.1.4 is thus executed before the PC element ADD, PC1.1.1.3.

4.1.10.6 Resetting Execution

Resetting or RESET-execution is performed when some RESET input on an execution unit is activated. This means that all variables in the local data area adopt an original status which, for most variables, is the zero value. With RESET-execution, the zero values are read-out to the data base.

4.1.10.7 Scanning of Process Inputs

All analog and digital process inputs are scanned cyclically with a periodicity which can be selected with a parameter (SCANT) in the data base element. As an alternative, for S100 I/O,

you can select interrupt-controlled scanning of digital inputs by selecting the parameter SCANT to INTERRUPT. You can select different values of SCANT in the range 10 ms to 600 s. See the reference manual *Data Base Element* for available standard scanning times.

Inputs scanned at intervals of 10 ms - 2 s are scanned under the corresponding PC interpreter to obtain close synchronization between scanning and PC execution. The synchronization functions if the scanning time and the cycle time for the PC belong to the same interpreter. There is no scanning if the PC program is not dimensioned. Scanning of inputs with the standard times 5 - 600 s is not synchronized.

4.1.11 Data Transport

4.1.11.1 Reading-in Phase

Each execution of an execution unit begins with a reading-in phase. This means that all PC elements in the execution unit have input data which is read on the same occasion. The weight of associated data during the complete execution is illustrated with the example in Figure 4-18.

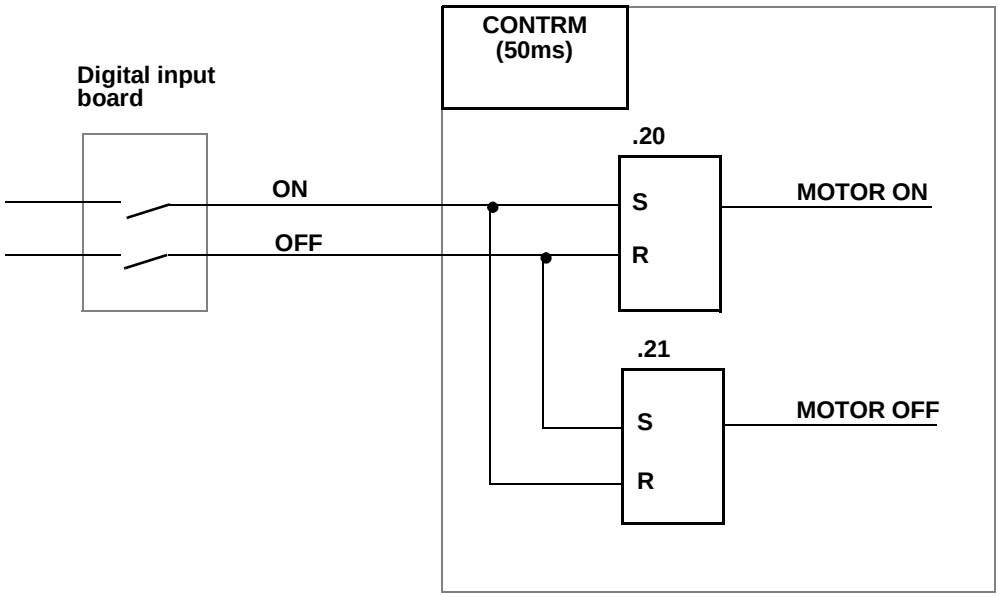

Figure 4-18. Example of Reading-in Phase

Assume that execution of element .20 is followed by an interrupt caused by the digital input signal changing status from 1 to 0. When the execution is resumed with element .21, the signals MOTOR ON and MOTOR OFF are active simultaneously. The system automatically introduces a reading-in element (an "invisible" GET element) which reads the values of the input signals at the beginning of the execution of the unit and stores them in the local data area to prevent such faults.

4.1.11.2 Reading-out Phase

The execution of all execution units is concluded with a reading-out phase. This means that output data from the execution unit is obtained from the executions of all of the PC elements in the unit.

The following example illustrates the requirements for reading-out elements. Assume two execution units with the cycle times 500 ms and 50 ms, respectively, see Figure 4-19.

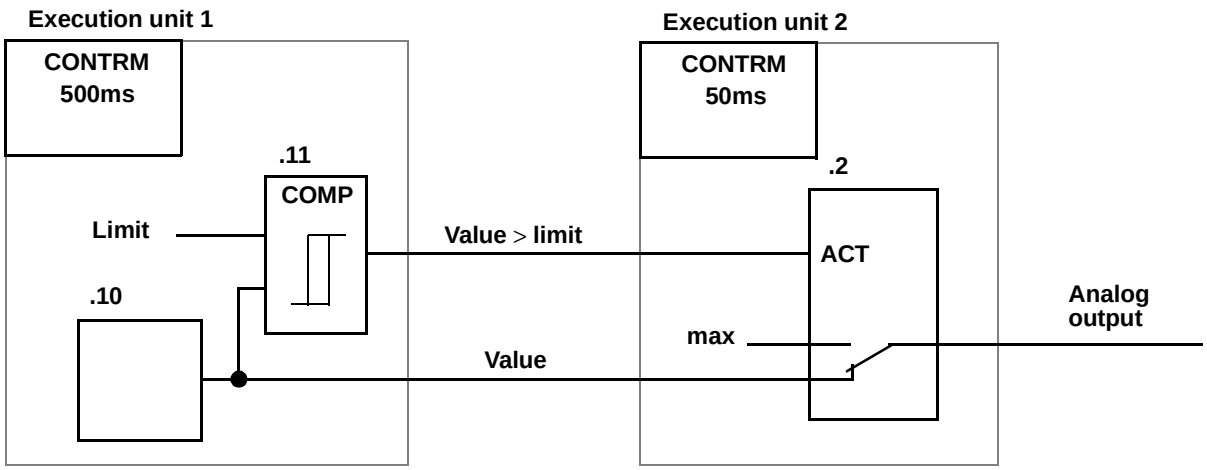

Figure 4-19. Example, Reading-out Phase

A value is calculated in the execution unit with the cycle time 500 ms and a limit check is performed on the calculated value. These values (VALUE and VALUE > LIMIT) are connected to an execution unit with cycle time 50 ms where the logical signal VALUE > LIMIT controls an analog output with a fixed value MAX or with the calculated signal VALUE. Assume that when element .10 has been executed (but not .11), an interrupt signal with the cycle time 50 ms is received from the execution unit. The PC element in this unit works with the values of the signals VALUE > LIMIT and VALUE, which are not associated with one another. To prevent this, the system automatically introduces a reading-out element (an "invisible" PUT element).

The purpose of the reading-out element is to ensure that the output signals from an execution unit only become legible for PC elements within other execution units when all PC elements within the unit have been executed.

If output signals from an execution unit are to be stored in the data base, all data base points are updated when all PC elements within the unit have been executed.

4.1.11.3 Data Transport between Execution Units

Figure 4-20 shows how data is exchanged between different executing units.

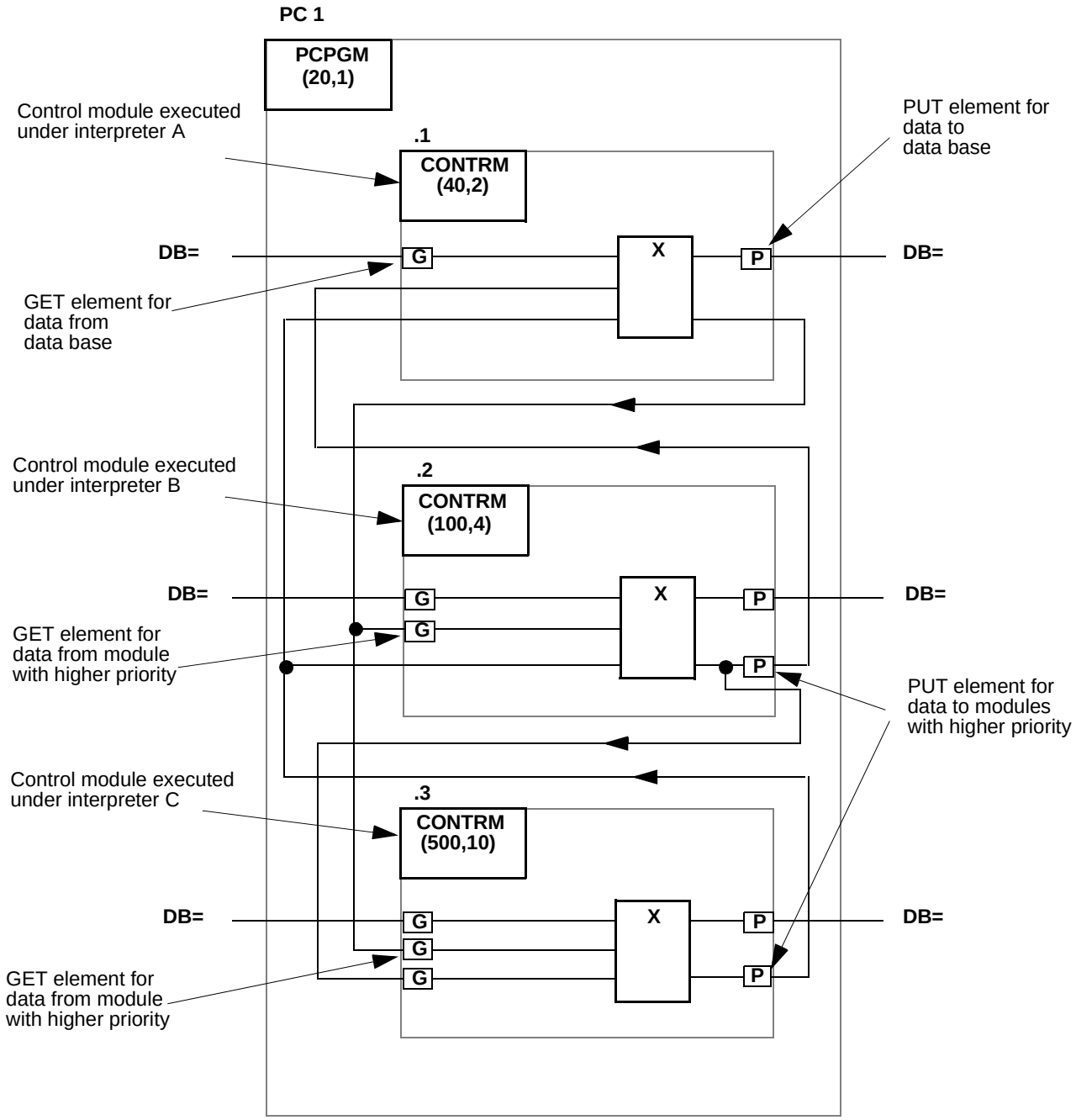

Figure 4-20. Data Transport

Note the following regarding data exchange.

- Input signals from the data base:
  The reading-in element (GET element) is created automatically by the engineering station.
- Output signals to the data base:
  The reading-out element (PUT element) is created automatically by the engineering station.
- An output signal is created by a PC element with higher priority than the PC element coupled to the output signals:
  A GET element is created in the execution unit containing the receiving PC element.
- An output signal is created by a PC element with a lower priority than the PC element coupled to the output signal:
  A PUT element is created in the execution unit in which the output signal is created.
- An output signal is created by a PC element with the same priority as the PC element coupled to the output signal:
  No GET or PUT elements are created since PC elements cannot interrupt each other's execution.

4.1.12 Initialization of Process Communication

When the system is started, the fault-indicating red LEDs on the I/O boards illuminate. If the system goes to the working mode CONFIGURATION, the LEDs remain active. If the mode goes to OPERATION, the process communication starts and the following start sequence is executed:

- Check and initialization of I/O boards.
  - The internal functions on each board are checked. Analog input boards are tested by reading-in and limit check of any reference channels.
  - The parameters stored in the data base are read-out to the circuit boards.
  - The fault indications extinguish if no fault is detected during the check and initialization procedures. If, however, a fault is detected, the fault indication remains active and an error message is sent to the programming unit connected. If the board concerned is not defined by the user during the configuration phase, the board is not processed and the error indication persists.
- Initialization of outputs.
  - All of the outputs are deactivated in connection with the start. This is completely controlled by the hardware.
  - During the initialization procedure, a start value, stored in the data base, is issued to the output concerned. Select either a fixed start value or the value of the signal in the data base before the start.

4.1.13 Diagnostics

During system initialization as well as during operation, the system itself checks that the hardware is serviceable. For a description, see Section 1.8.10 Availability and Security. In that section, you can find information on diagnostics and process output behavior at faults and interrupts.

4.2 Operating Overview

An Advant Controller 450 is an autonomous station which normally is not handled by an operator. Of course, it is started and sometimes stopped manually. This is done, however, in specific situations such as at the time of installation work and maintenance.

Accordingly, operating instructions are spread out in this manual. See where the specific activity is treated.
For general descriptions, see the beginning of this chapter. For concrete instructions, see Chapter 2, Installation and Chapter 5, Maintenance.

4.3 Runtime Tutorial

See the reference made in Section 4.2, Operating Overview.

4.4 Operating Instructions

See the reference made in Section 4.2, Operating Overview.

4.5 Runtime Operation Menus

Runtime operation menus are not treated by this product documentation.
The Advant Controller 450 is maintained by an engineering station. For information in these areas, see separate documentation attached to the actual engineering station.

Chapter 5 Maintenance

5.1 Preventive Maintenance

This chapter describes routine maintenance, replacement and installation procedures necessary to maintain the operation of an Advant Controller 450.

5.1.1 Safety Regulations

Always follow the instructions below when installing and operating an Advant Controller system to minimize the risks of injury to personnel and damage to the equipment. Local statutory regulations, to the degree that they are stricter than the following, take precedence.

5.1.1.1 Personnel and Process Safety

DANGER - CAUTION

Observe the following:

- Use only approved hoisting equipment when lifting cabinets. See lifting instructions enclosed with the cabinet.
- Never switch on the voltage supply of the cabinet during installation work. However replacement of modules in subracks can be done on line, that is while power supply is switched on. Special instructions are given for the work with power supply units.
- Power supply units in a "live" system, i.e while the mains supply is switched on, is to be **replaced by authorized service personnel only.**
- **Work with care when supply voltage is applied in the system. The voltage in the cabinet can cause injury and can even kill a human being.**
- Make sure that everyone working on the installation knows the location of the safety switch and the mains power supply switch to the Advant Controller 450 equipment and how to use it.
- When the subsections of the process are checked and a test run has been performed, a responsible person is to check out interlocking chains, and so on.
- Inform all assembly personnel about test runs to be performed.
- Process technicians are to be present when testing and operating the process objects.
- Never press the system ENTER (initialization) if you do not know what happens in the system with an initialization. The command RECONFIG is equivalent to an ENTER in the CLEAR mode.
- Remember that the control system can be controlled from an engineering station connected at another node via a MasterNet. For example it can be stopped, configured and started remotely.
- Remember that an Advant Controller 450 starts automatically when voltage is applied if this is not prevented by means of the data base element START. You can also prevent start-up of an Advant Controller 450 by setting the START MODE selector in the STOP position.

5.2 Preventive Maintenance

This chapter describes routine maintenance, replacement and installation procedures necessary to maintain the operation of an Advant Controller 450.

5.2.1 Safety Regulations

Always follow the instructions below when installing and operating an Advant Controller system to minimize the risks of injury to personnel and damage to the equipment. Local statutory regulations, to the degree that they are stricter than the following, take precedence.

5.2.1.1 Personnel and Process Safety

DANGER - CAUTION

Observe the following:

- Use only approved hoisting equipment when lifting cabinets. See lifting instructions enclosed with the cabinet.
- Never switch on the voltage supply of the cabinet during installation work. However replacement of modules in subracks can be done on line, that is while power supply is switched on. Special instructions are given for the work with power supply units.
- Power supply units in a "live" system, i.e while the mains supply is switched on, is to be **replaced by authorized service personnel only.**
- **Work with care when supply voltage is applied in the system. The voltage in the cabinet can cause injury and can even kill a human being.**
- Make sure that everyone working on the installation knows the location of the safety switch and the mains power supply switch to the Advant Controller 450 equipment and how to use it.
- When the subsections of the process are checked and a test run has been performed, a responsible person is to check out interlocking chains, and so on.
- Inform all assembly personnel about test runs to be performed.
- Process technicians are to be present when testing and operating the process objects.
- Never press the system ENTER (initialization) if you do not know what happens in the system with an initialization. The command RECONFIG is equivalent to an ENTER in the CLEAR mode.
- Remember that the control system can be controlled from an engineering station connected at another node via a MasterNet. For example it can be stopped, configured and started remotely.
- Remember that an Advant Controller 450 starts automatically when voltage is applied if this is not prevented by means of the data base element START. You can also prevent start-up of an Advant Controller 450 by setting the START MODE selector in the STOP position.

5.2.1.2 Machine Safety

CAUTION

Observe the following safety rules:

- Avoid discharges of static electricity by grounding both yourself and tools before handling circuit boards and other parts of the equipment.
- Use the grounded wristband installed in the cabinet when handling parts of the system.
- Handle the circuit boards carefully, particularly those which contain MOS components which can be damaged by static electricity discharges. Note the warning label on the circuit boards.
- Use, as far as possible, the grounded wristband when handling boards not stored in envelopes of conductive plastic. This gives optimum protection against static electricity discharges.
- Always store circuit boards in envelopes of conductive plastic when not installed in the system rack.
- Always switch off the voltage before extracting a board which cannot be exchanged while under voltage. Wait a sufficient time for the capacitors to discharge.
- Switch off voltage to the system and withdraw all boards at least 20 mm before electrical welding is performed near the controller system.
- A warning label is fixed in the system to draw attention to possible damage by ESD (Electro Static Discharge).

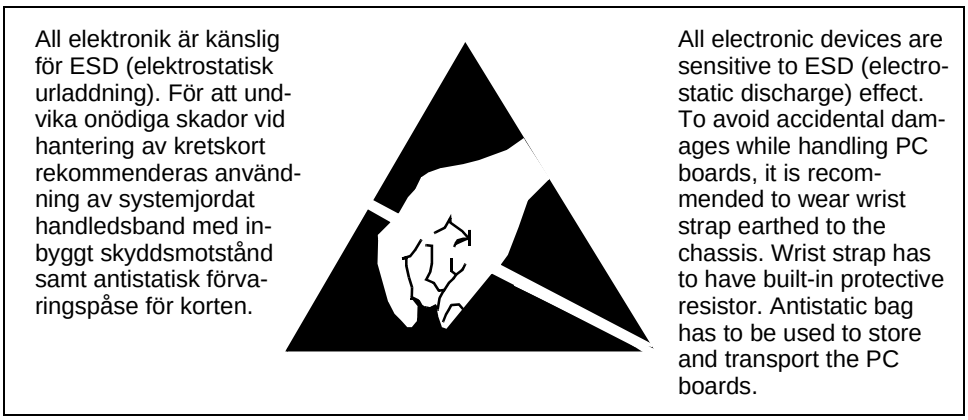

Figure 5-1. Warning Label regarding ESD

5.2.2 Visual Inspection

Inspect the Advant Controller and the I/O cabinets at regular intervals determined by environmental factors such as vibration, high ambient temperatures, and so on.

5.2.3 Safety

Check that all screwed joints and connections within the cabinets are tightened effectively.
Ensure that wiring, circuit boards and other electrical components are undamaged.
Pay particular attention to overheating, damaged insulation or signs of wear.

5.2.4 Cleanliness

Remove dust and any other soil from the cabinet with a vacuum cleaner. Use a lint-free cloth, dampened with methylated spirits to remove stubborn dirt.

5.2.5 Air Filter

The fan unit located beneath the controller subrack (Advant Controller 450) always includes an air filter.

Wash the air filter included with the equipment in warm water with a mild detergent at regular intervals determined by environmental conditions. Replace the filter after three such washings. The new filter must be an approved spare part.

5.2.6 Backup Batteries

Replace the rechargeable battery package mounted inside the controller cabinet on the right-hand side after every three years of service.
Also replace it after each complete discharge (the memory contents are lost), which introduces the risk of battery cell damage. See Section 5.5.10.7, Battery Exchange.

5.2.7 Forced Cooling

The fan unit incorporates transducers which are activated by failure of the cooling system. This condition is indicated in the data base (Station Element) and the system status display in the central operator station.

5.3 Hardware Indicators

Most of the replaceable hardware modules are equipped with LED indicators.

- A green LED indicating running.
- A red LED indicating fault.

Some modules provide additional yellow LEDs for increased maintainability, for example send and receive information on communication modules. The general meaning of the LED indicators can be found in the module descriptions, Appendix A, Hardware Modules. The fault finding instructions included in this Chapter 5, Maintenance give further advice how to interpret combinations of LED indications in different system configurations.

System halt codes are shown on the processor module character display.

You can find solid information along with the halt code/system message and fault finding descriptions in Section 5.4, Error Messages and Section 5.5, Fault Finding and User Repair below.

5.4 Error Messages

There are two kinds of error messages in an Advant Controller system:

- Halt codes
  - On the character display on the processor module front
  - More detailed information read from the memory by an engineering station.
- System messages
  - Accessible from an engineering station
  - Accessible from an operator station like Advant Station 500 Series.

5.4.1 Halt Codes

A system halt code is shown on the processor module character display but more information, which can be read from the memory, can often be required. This method is based on the storage of halt code and attached information, in special memory areas, by the built in diagnostics before the system is stopped. The information can then be read by starting the system in working mode OFFLINE.

Typical halt codes and corrective measures are listed in Appendix H, Halt Codes.

If this method does not function, the fault is probably caused by a serious CPU malfunction. The fault must then be determined without the use of an engineering station.

5.4.1.1 Reading of Halt Codes

Detailed information attached a halt code can be read using the engineering station command LSYSHI. Proceed as described in Section 5.4.2.1, Reading of System Messages.

5.4.2 System Messages

System messages are generated as soon as a malfunction is detected or there has been some other important change of status in the controller. The messages are stored in a queue in the controller memory.

Typical system messages and corrective measures are listed in Appendix I, System Messages.

Only system messages which are of particular interest to the final user are included. That is messages which point out possible malfunctions which can be easily corrected by the user himself. System messages not described here are to be noted and forwarded to ABB Automation Products AB to determine if any action is necessary.

5.4.2.1 Reading of System Messages

1. You notice that the Advant Controller has stopped the operation. The character display on the processor module front shows a halt code (not in all situations).
2. Connect an engineering station (for example Advant Station 100 Series Engineering Station) to the processor module service port.
   If the engineering station is already connected to the processor module do the command TSESS (terminate session).
3. Set the start mode selector on the processor module in position 4 (OFFLINE).
   Then depress ENTER.
4. Set up the engineering station.
   In the menu, choose:
   a. Advant Controller 400
   b. Post Mortem Analysis
      If the engineering station prompts
      ! CONNECTED ERROR - CHECK CONNECTION WITH TARGET SYSTEM!
      then depress in OFFLINE mode the ENTER button and try again.
5. Check that the printer is connected to the engineering station.
   Enter the command HARDCOPY ON.
6. Enter the following commands one at a time and wait for the printout.
   a. LSYSHI List system halt information
   b. LTSL List task switch log
   c. LSYSM ALL List system messages.

There are cases where it is impossible to connect the engineering station to the Advant Controller, or impossible to use all commands. In such cases, contact ABB.

NOTE

A message is deleted from the message queue in the system as soon as it is transmitted to the engineering station. It is important to log the information to a printer.

5.5 Fault Finding and User Repair

In all situations when the controller has stopped you should carefully read and notes all halt codes and system messages available before you proceed. See Section 5.4.2.1, Reading of System Messages.

5.5.1 Introduction

Diagnostics are available in different forms for rapid localization of the source of the equipment malfunction. Hardware error is usually corrected by replacing the faulty unit, which is returned to ABB for repairs. The least replaceable unit is normally a circuit board or an apparatus like a power supply unit.

Disturbances and system halt caused by software error are commonly solved by a manual system restart. Sometimes you must load the application program, reinforcing the need for actual backup copies. In such situations, it is strongly recommended that you take careful note of all available stored error codes and system messages before an eventual program loading and new initialization. Then contact ABB for further information.

External faults in process wiring and transducers can also affect the function of the controller. However, this type of fault is not discussed in this manual.

Debugging of PC programs is described in the reference manual *AMPL Configuration Advant Controller 400 Series*.

5.5.2 Diagnostics and Fault Announcement

Both hardware and software in an Advant Controller 450 are provided with supervision against system fault. For a survey of the diagnostics, see Section 1.7.10.1, Diagnostics.

The following indicating facilities apply on different levels:

The Controller and I/O Cabinet

- LED indicators on circuit boards:
  - Green LED, RUN, indicates normal function.
  - Yellow LED indicates an active signal, for example, status of digital input (DI) or digital output (DO).
  - Red LED, FAULT, indicates malfunction.
- Character display on processor module front:
  - Show working mode, error or halt code. See Section 5.4, Error Messages.

Plant Central Fault Annunciator

The Advant Controller 450 provides two run/alarm relays located in the Status Collector TC520. One relay for each possible processor module. The relay contact which is normally closed, opens at system halt (processor module halt). Use the contact function in any desired application function, for example, creating audible alarm or interlocking of certain process objects in the event of a controller safety shutdown.

Engineering Station

- Halt codes stored in a stopped system. Read with the command LSYSHI:
  - Show error or halt code. See Section 5.4, Error Messages.
- System messages. Read with the command LSYSM ALL:
  - Most information in coded form
  - Give information about probable cause of malfunction. See Section 5.4, Error Messages.

Central Operator Station

If the controller is included in a control network with a central operator station type Advant Station 500 Series Operator Station or MasterView 800/1, the following facilities apply.

- System messages:
  - In plain language (edited mix for process operators).
    It is possible to direct all messages intended for an engineering station and system maintenance personnel also to an operator station. However, normally a limited information flow in plain language is desirable.
  - Give information about probable cause of malfunction.
    See Section 5.5.2.1, System Status and Plain Language System Messages
- System status displays:
  - Showing fatal and non-fatal error in the total controller function and in individual functions/units as well.
    In many cases the system status function points out the faulty replaceable unit. Please find information of such possibilities in Section 5.5.2.1, System Status and Plain Language System Messages.

Process Control

Certain controller faults, for example those related to process I/O board channels, will probably be detected indirectly when a control function goes wrong. For most I/O board types, there is limited or no system diagnostics support on channel level.

A tank can indicate high level because of an error in the current output stage to a control valve.

An oil flow can indicate low value because of a lost measured value which in turn is caused by an input amplifier fault, and so on.

To minimize the down-time, it is important in such cases that the operator have a good overview and knowledge of the plant functions.

It is also essential that the control system design, in addition to the normal control functions, include supervision of important process objects and their system inputs and outputs as well.

5.5.2.1 System Status and Plain Language System Messages

You need the following information to make use of the system status displays in a central operator station when fault finding. The disposition is based on the displays. References for a listed item to the controller data base and presumed faulty unit or further fault finding instructions are given then. A reference should be seen as a "short cut" information for the authorized maintenance personnel. The general safety regulations and principles for fault finding and user repair must be fully clear before work starts.

Advant Controller 400

The appearance in an Advant Station 500 Series operator station is shown. The lay-out of the display is not identical in an MasterView 800/1 application. However the information can be applied.

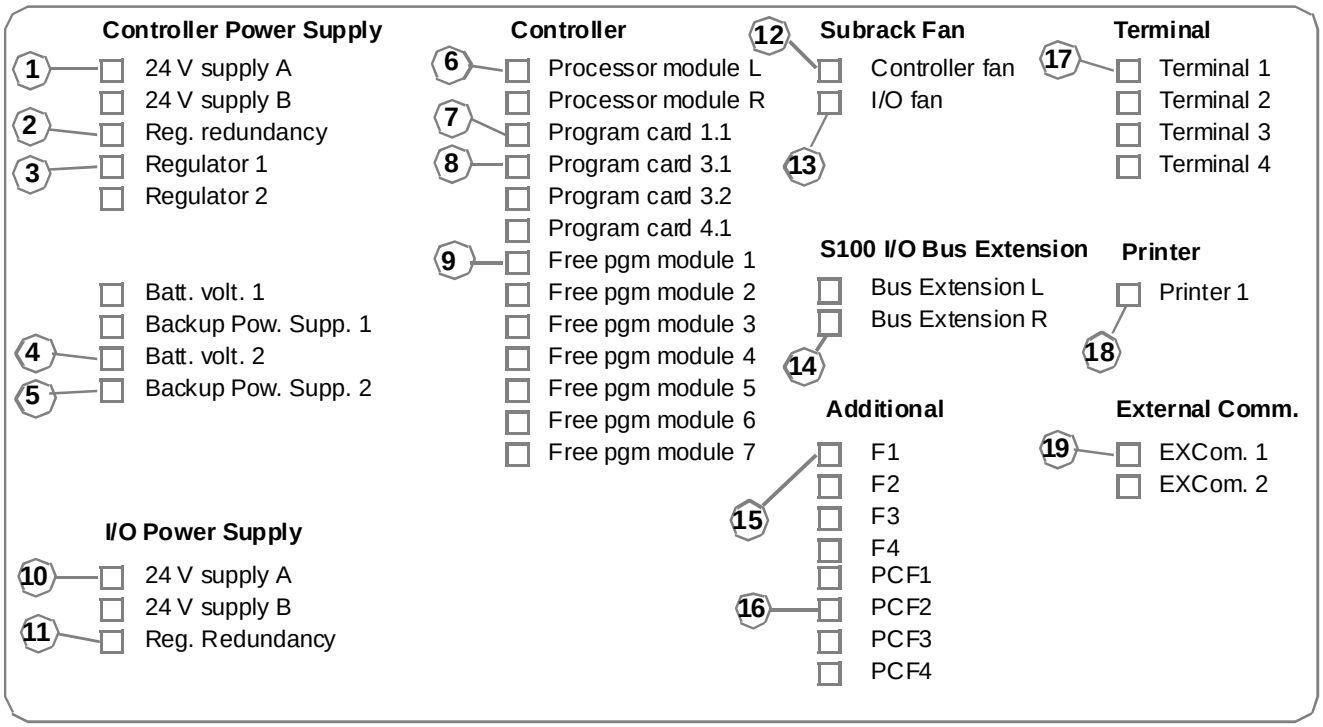

Figure 5-2. System Status Display Advant Controller 400 applied to Advant Controller 450

Reference in Advant Controller 400 Display: 1

Presentation: 24 V supply A (or B)

■	green	Normal
☒	red cr	Fault - Lost redundancy

Function: Supervision of the 24 V power supply for the subrack containing the processor module. (only relevant when two redundant branches A and B are installed).

Plain System Message at fault:

POW SUPP ST	24 V supply A/B faulty	Net xx	Nod yy

Actions at fault: 1. See Section 5.4.9.5, Check of Power Supply

Block Diagram:

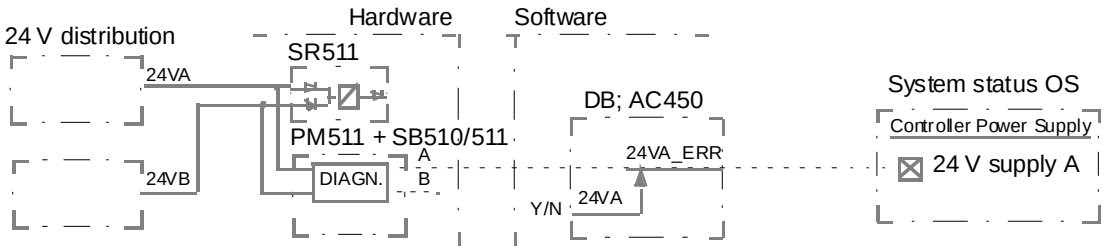

Reference in Advant Controller 400 Display: 2

Presentation: Reg. redundancy

■	green	Normal - all regulators present and OK
☒	red cr	Fault - any regulator missing or erroneous

Function: Supervision of redundant 5 V regulators in the subrack containing the processor module

Plain System Message at fault:

POW SUPP ST	Voltage Regulator faulty	Net xx	Nod yy

Actions at fault: 1. See Section 5.4.9.5 Check of Power Supply

1. See Section 5.4.9.5, Check of Power Supply

Block Diagram:

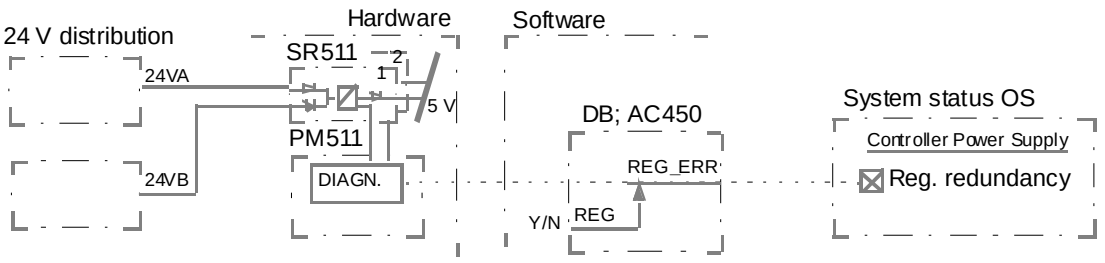

Reference in Advant Controller 400 Display: 3

Presentation: Regulator 1 (2..4)

green Normal
red cr Fault - Regulator 1 (2..4) missing or err.

Function: Supervision of particular 5 V regulator in the subrack containing the processor module. (only relevant when redundant 5 V regulators are installed).

Plain System Message at fault:

POW SUPP ST	Voltage Regulator faulty	Net xx	Nod yy

Actions at fault:
1. Replace the regulator pointed out
2. See Section 5.4.9.5, Check of Power Supply

Block Diagram:

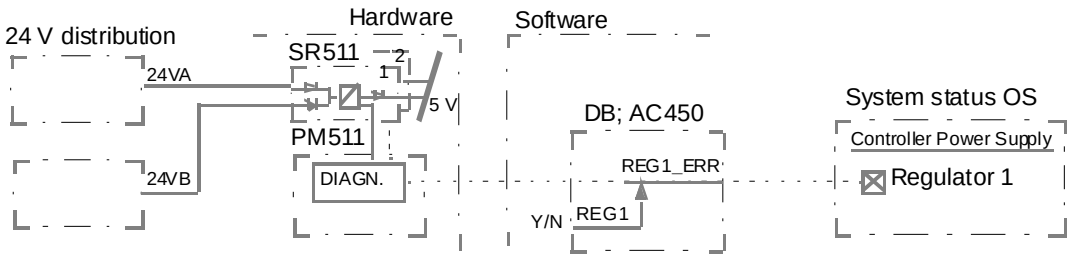

Reference in Advant Controller 400 Display: 4

Presentation: Batt. volt. 2

green Normal
red cr Fault

Function: Supervision of the battery charge and the battery condition

Plain System Message at fault:

POW SUPP ST	Backup Battery faulty	Net xx	Nod yy

Actions at fault:
1. Replace the Battery Unit SB522
2. See Section 5.4.9.6, Check of Backup Power Supply

Block Diagram:

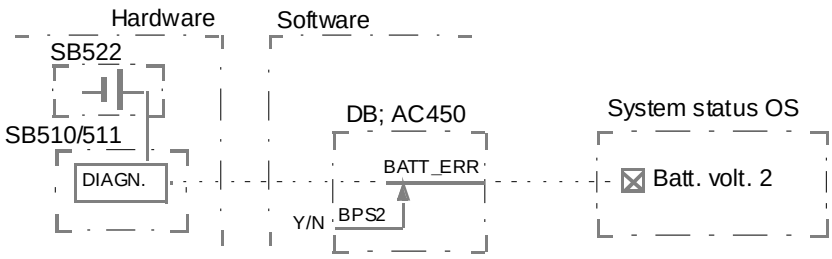

Reference in Advant Controller 400 Display: 5

Presentation: Backup Pow. Supp. (1) 2

■	green	Normal
☒	red cr	Fault

Function: Supervision of the backup power supply of RAM

Plain System Message at fault:

POW SUPP ST	Battery Charger faulty	Net xx Nod yy

Actions at fault: 1. See Section 5.4.9.6, Check of Backup Power Supply

Block Diagram:

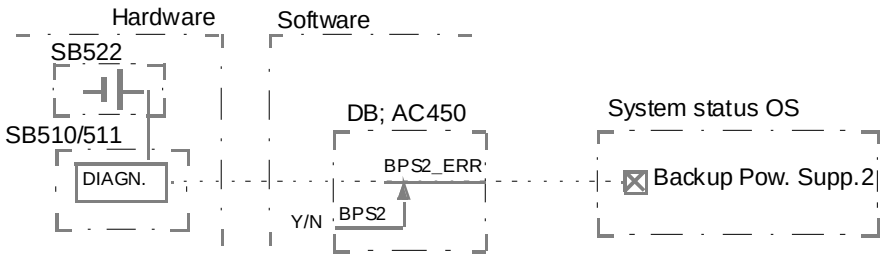

Reference in Advant Controller 400 Display: 6

Presentation: Processor module L (R)
(only relevant when two redundant processor modules are installed)

■	green filled	Processor is primary
□	green empty	Processor in backup mode
☒	yellow cr	Processor is stopped
☒	red cr	Processor is erroneous

Function: Supervision of redundant processor modules

Plain System Message at fault:

DEV ST	Error in CPU	Net xx Nod yy

Actions at fault:
1. Replace the pointed out processor module
2. Fault finding in case of a single processor module or stop of both modules when redundant processor modules are used is described in Section 5.4.9.6, Check of Backup Power Supply

Block Diagram:

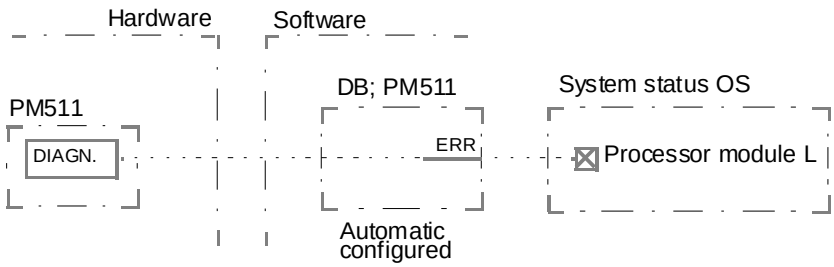

Reference in Advant Controller 400 Display: 7

Presentation: Program card 1.1

■	green	Normal
☒	yellow cr	Warning - Initial check in progress
☒	red cr	Fault - wrong check sum or missing card

Function: Supervision of program card including system software (check sum)

Plain System Message at fault:

PROGRAM CARD	Memory error/Missing card/Wrong card <pos.>	Net xx	Nod yy

Actions at fault:
1. Install or replace program card (PCMCIA)
2. Replace processor module PM511

Block Diagram:

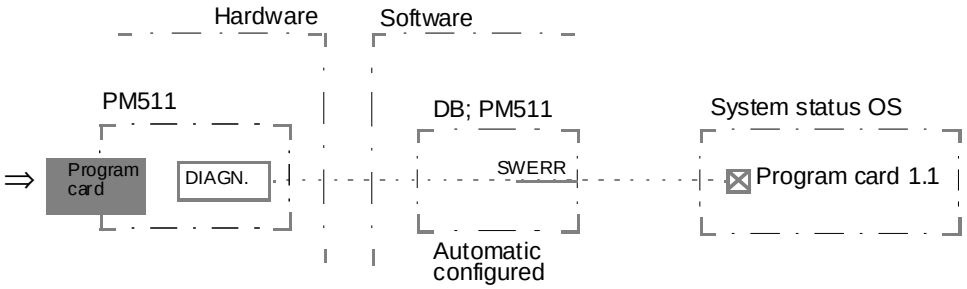

Reference in Advant Controller 400 Display: 8

Presentation: Program card 3.1 (.2, 4.1)

■	green	Normal
☒	yellow cr	Warning - Initial check in progress
☒	red cr	Fault - wrong check sum or missing card

Function: Supervision of program card including system software (check sum)

Plain System Message at fault:

PROGRAM CARD	Memory error/Missing card/Wrong card <pos.>	Net xx	Nod yy

Actions at fault:
1. Install or replace program card (PCMCIA)
2. Replace program card interface MB510

Block Diagram:

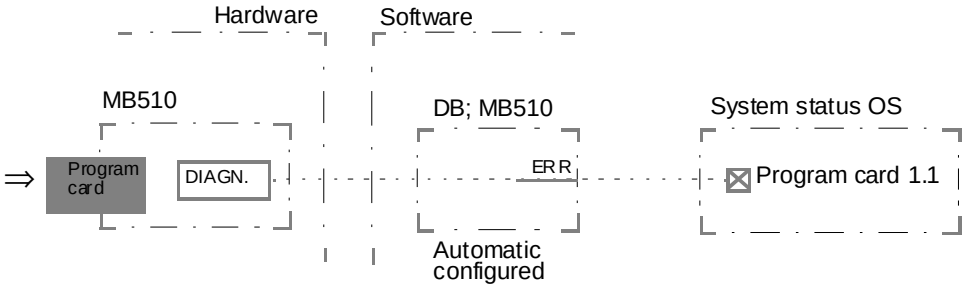

Reference in Advant Controller 400 Display: 9

Presentation: Free pgm module 1

green Normal
red cr Fault - Hardware or application program

Function: Supervision of free-programmable module PU535

Plain System Message at fault:

MISC ST	FPB board out of order	Net xx	Nod yy

Actions at fault:
1. Replace PU535
2. Load the specific application program (C program)

Block Diagram:

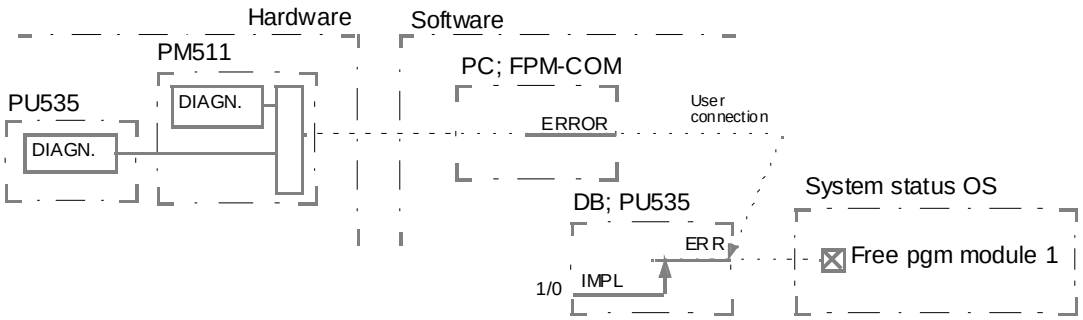

Reference in Advant Controller 400 Display: 10

Presentation: (I/O) 24 V supply A/B

green Normal

red cr Fault - Lost voltage or lost redundancy

Function: Supervision of the 24 V power supply for one or several I/O subracks (collecting alarm). Each branch A/B is supervised if redundant branches are installed.

Plain System Message at fault:

POW SUPP ST	24 V I/O supply A/B faulty	Net xx	Nod yy

Actions at fault:

1 See Section 5.4.9.5, Check of Power Supply

Block Diagram:

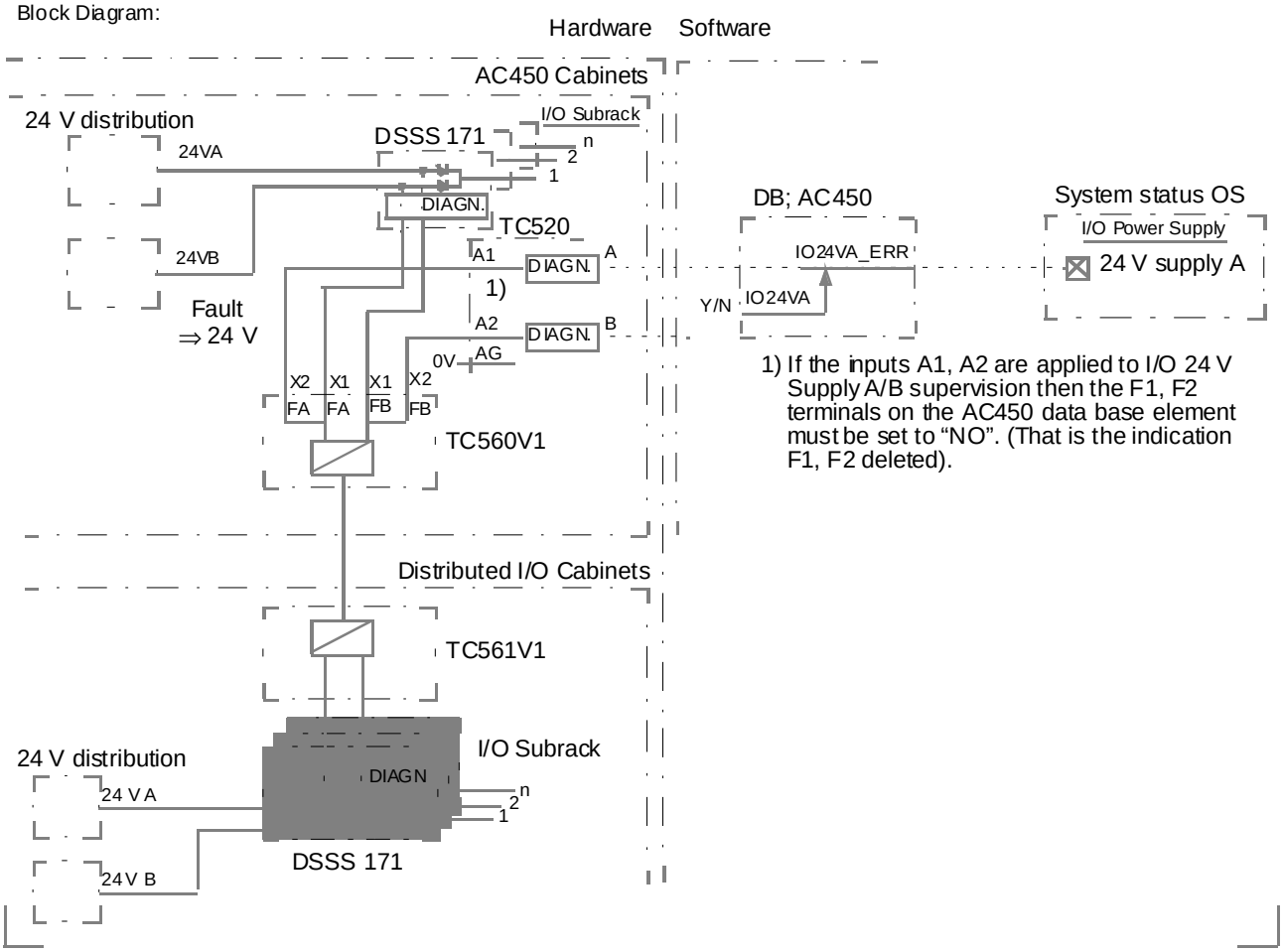

1) If the inputs A1, A2 are applied to I/O 24 V Supply A/B supervision then the F1, F2 terminals on the AC450 data base element must be set to "NO". (That is the indication F1, F2 deleted).

Reference in Advant Controller 400 Display: (11)

Presentation: (I/O) Reg. redundancy

☐ green Normal - all regulators present and OK
☒ red cr Fault - any regulator missing or erroneous

Function: Supervision of redundant 5V regulators in one or several I/O subrack (collecting alarm)

Plain System Message at fault:

POW SUPP ST	I/O voltage regulator faulty	Net xx	Nod yy

Actions at fault: See Section 5.4.9.5, Check of Power Supply

Block Diagram:

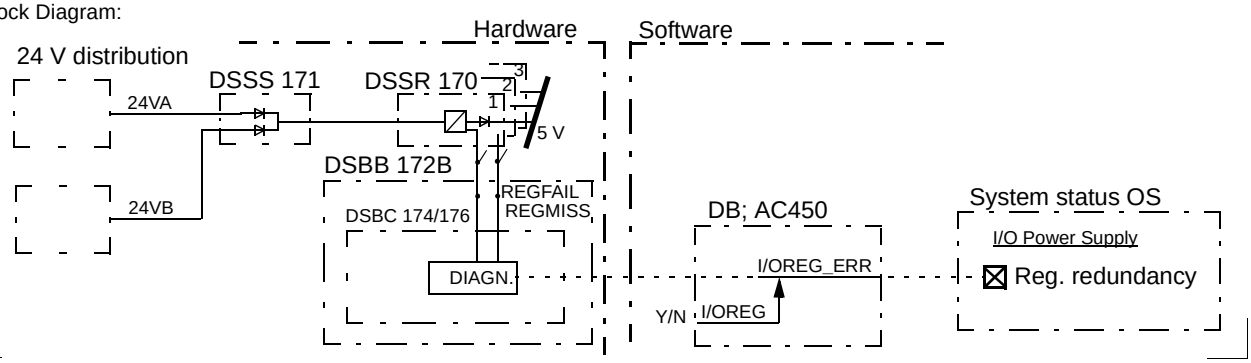

Reference in Advant Controller 400 Display: (12)

Presentation: Controller fan

☐ green Normal
☒ red cr Fault - all or any of three fans erroneous

Function: Supervision of the fan unit in the controller subrack. **Note!** The Fan Unit requires 24V dc (24VA and/or 24VB) for reporting FAN ERR (active fault signal)

Plain System Message at fault:

Fan for CPU faulty	Net xx	Nod yy

Actions at fault:
1. Check function in cabinet
2. Check fuses in the fan unit RC527
3. Check electrical signal
4. Replace fan unit

Block Diagram:

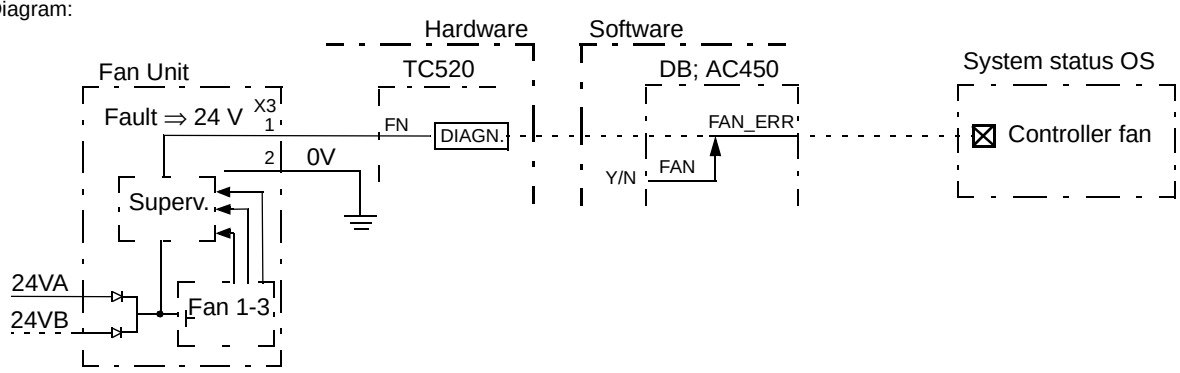

Reference in Advant Controller 400 Display: **13**

Presentation: I/O fan

☐ green Normal
☒ red cr Fault - any of the fans erroneous

Function: Supervision of fans in all I/O subracks (collecting signal)

Plain System Message at fault:

P	Fan for I/O faulty	Net xx	Nod yy

Actions at fault:

1. Check function in cabinet
2. Check fuses in the fan unit
3. Check electrical signal
4. Replace fan unit

Block Diagram:

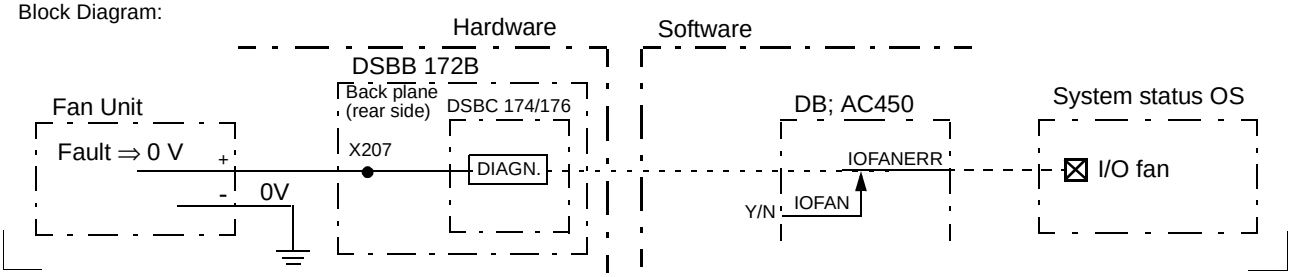

Reference in Advant Controller 400 Display: (14)

Presentation: S100 I/O Bus Extension L (R)
Left (right) bus extenders are connected to left (right) processor module.
(R is only relevant when redundant bus extenders are installed.)

☐ green	Normal - all left (right) bus extenders are present and OK
☒ red cr	Fault - any bus extender missing or erroneous

Function: Supervision of S100 I/O Bus Extenders

Plain System Message at fault:

S100 BUS EXT STATUS	Bus extender error	Net xx	Nod yy

Actions at fault:
1. Check the communication link with respect to damage, loose connector, broken wire, etc.
2. Replace the faulty bus extender DSBC 174 or DSBC 176.

Block Diagram:

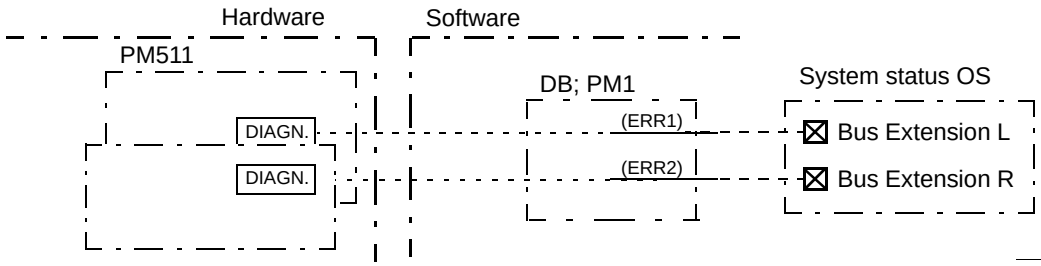

Reference in Advant Controller 400 Display: **15**

Presentation: F1 (F2..F4) or user defined text

green Normal
red cr Fault

Function: Supervision of application defined function.

Plain System Message at fault:

User defined error 1	Net xx	Nod yy

Actions at fault: 1. Check application function in the cabinet

Block Diagram:

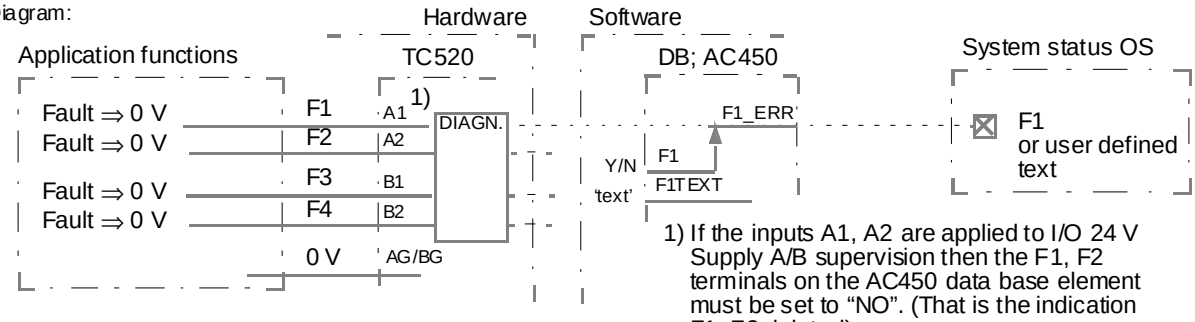

1) If the inputs A1, A2 are applied to I/O 24 V Supply A/B supervision then the F1, F2 terminals on the AC450 data base element must be set to "NO". (That is the indication F1, F2 deleted).

Reference in Advant Controller 400 Display: **16**

Presentation: PCF1 (PCF2.. PCF4) or user defined text

green Normal
red cr Fault

Function: Supervision of function in application program (AMPL)

Plain System Message at fault:

User defined error 1	Net xx	Nod yy

Actions at fault: 1. Check application program

Block Diagram:

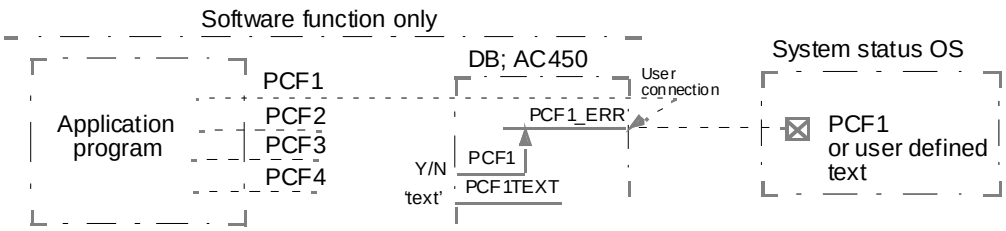

Reference in Advant Controller 400 Display: **17**

Presentation: User defined name
For example Terminal 1 (2..4)

■ green Normal
☒ red cr Fault - Hardware or software

Function: Supervision of terminal MasterView 320 and its communication

Plain System Message at fault:

RS 232	CI531 missing	Net xx	Nod yy

Actions at fault: 1. See the separate manual *MsterView 320*

Block Diagram:

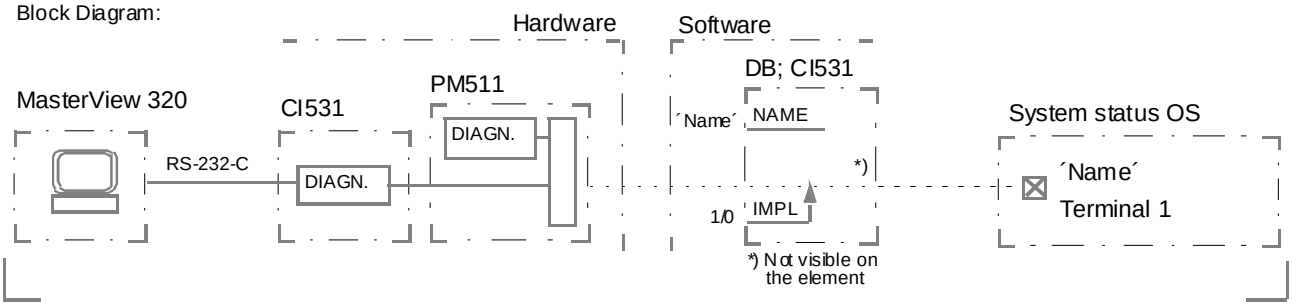

Reference in Advant Controller 400 Display: **18**

Presentation: User defined name
For example Printer 1

■ green Normal
☒ red cr Fault - Hardware or software

Function: Supervision of printer and its communication

Plain System Message at fault:

RS 232	CI531 missing	Net xx	Nod yy

Actions at fault:
1. Check the communication link with respect to damage, loose connector, broken wire, and so on.
2. Check the printer
3. Replace hardware modules; Modems, Printer, CI531 one at a time

Block Diagram:

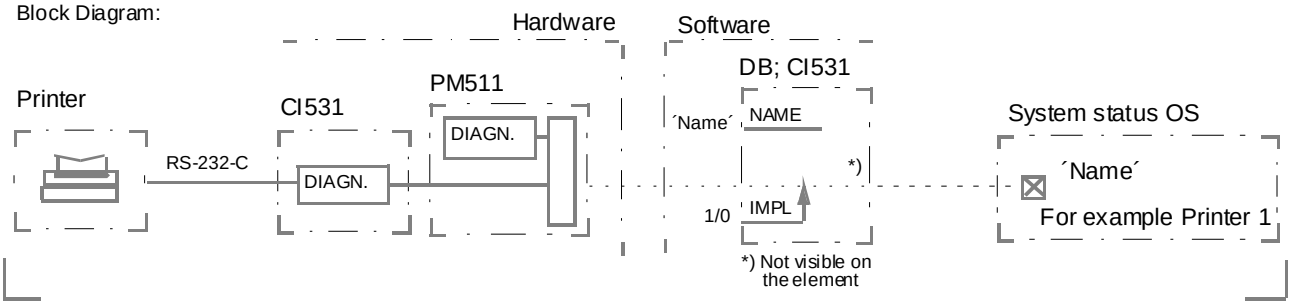

Reference in Advant Controller 400 Display: **19**

Presentation: User defined name
For example EXCom. 1

■	green	Normal
☒	red cr	Fault - Hardware or software

Function: Supervision of the communication with an external computer using V.24/RS-232-C and EXCOM protocol

Plain System Message at fault:

RS 232	CI531 missing	Net xx	Nod yy

Actions at fault:
1. Check the communication link with respect to damage, loose connector, broken wire, and so on.
2. Check the computer
3. Replace hardware modules; Modems, Computer, CI531 one at a time
4. See the separate manual *EXCOM*

Block Diagram:

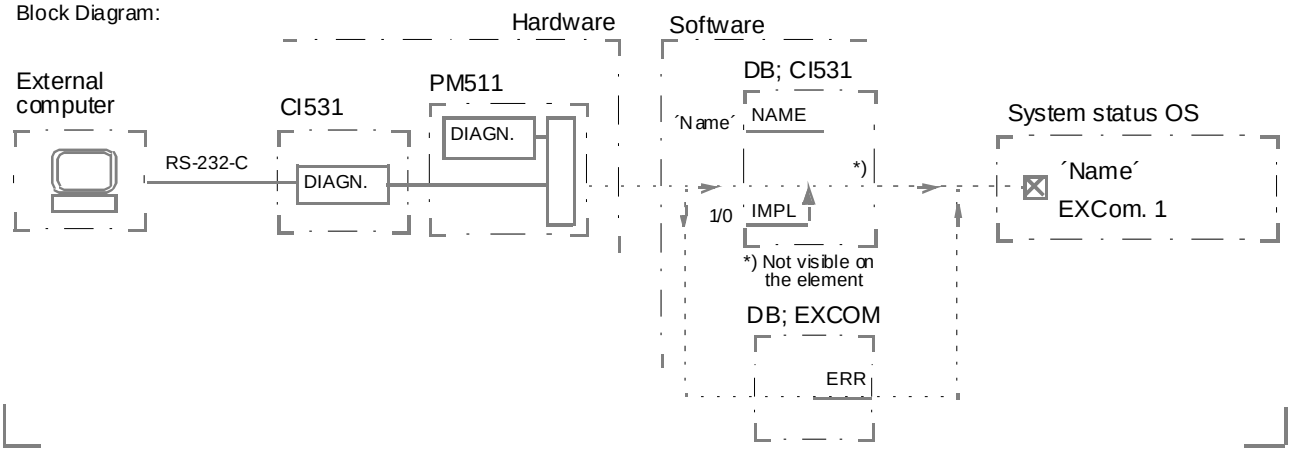

S100 I/O 1

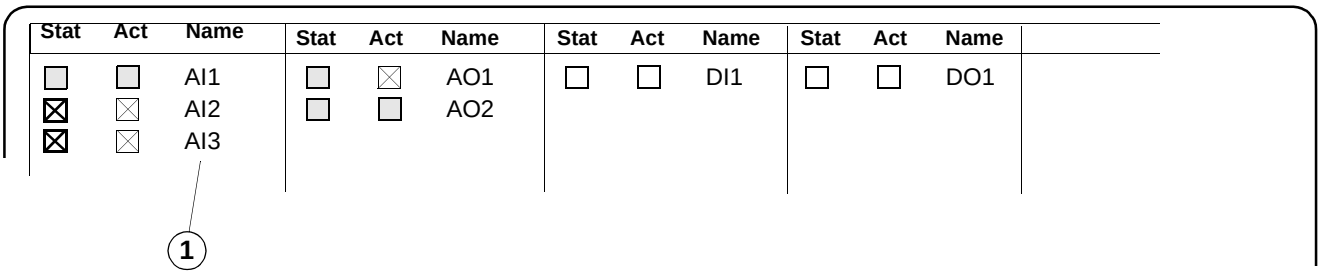

Figure 5-3. System Status Display, S100 I/O 1

Reference in S100 I/O 1 Display: 1

Presentation: User defined name (default: DB item designation for the board)

Stat (Status)

■	green	Normal
☒	red cr	Fault - the board is erroneous

Act (Activated)

■	green	The board is in service
☒	yellow cr	The board is out of service

Function : Status information for an S100 I/O board

Plain System Message at fault :

PROC I/O ST	XX Board error	Net xx	Nod yy

Actions at fault :

1. If stat indicates erroneous, the board should be replaced
   See Section 5.4.10.1, Board and Subrack Mounted Unit Exchange
2. If the board is out of service, see respective data base item, terminal SERVICE

Block Diagram:

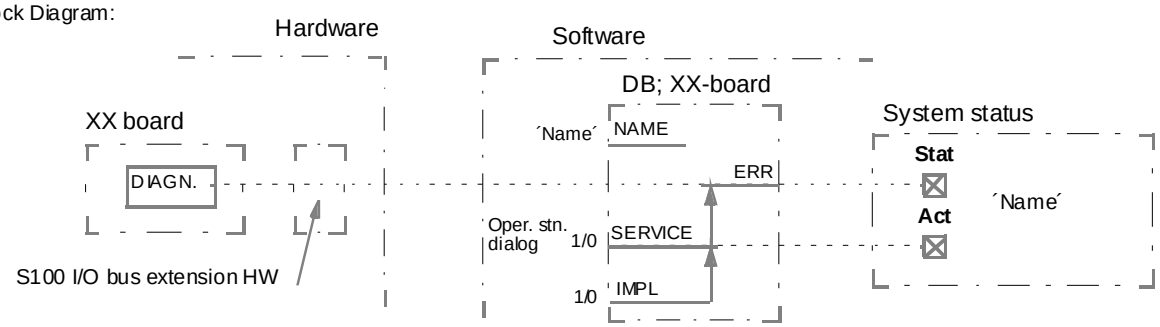

S100 I/O 2

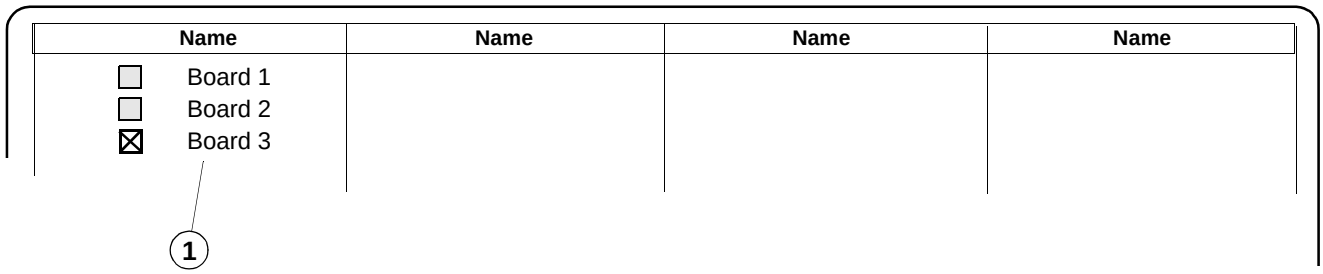

Figure 5-4. System Status Display, S100 I/O 2

Reference in S100 I/O 2 Display: 1

Presentation: User defined name (default: DB item designation for the board)

green Normal

red cr Fault - the board is erroneous

Function : Status information for an application specific S100 I/O board

Plain System Message at fault :

PROC I/O ST	Misc Board error	Net xx	Nod yy

Actions at fault :

1. Replace the board
   See Section 5.4.10.1, Board and Subrack Mounted Unit Exchange

Block Diagram:

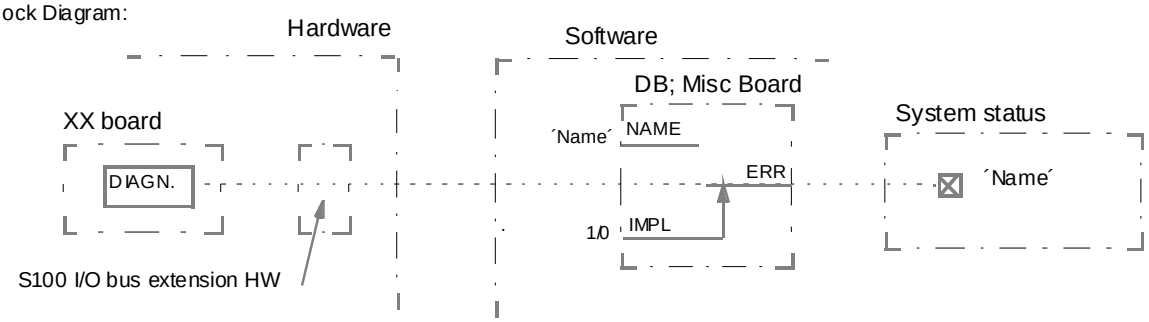

S100 I/O Redundant

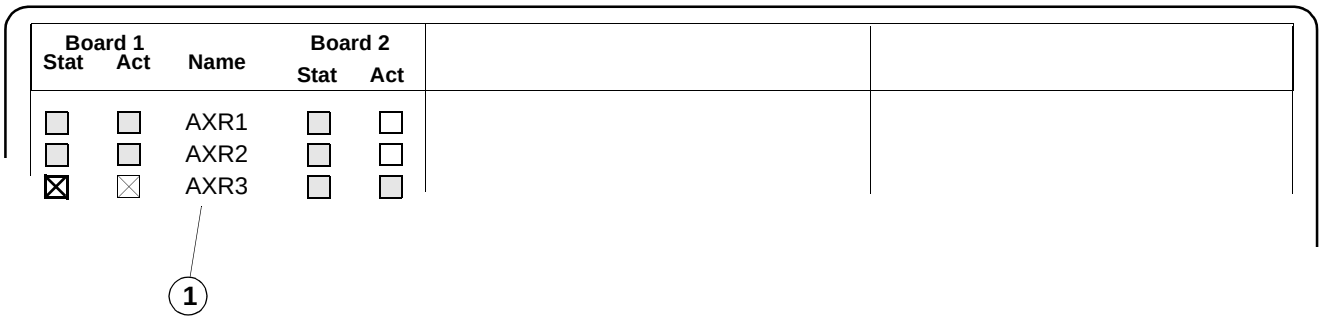

Figure 5-5. System Status Display, S100 I/O Redundant Board

Reference in S100 I/O Redundant Board Display: (1)

Presentation: User defined name (default DB: item designation for the board)

Stat (Status)

- green filled — Normal, the board is OK
- yellow empty — The board is in warning status
- red cr — Fault - the board is erroneous

Act (Activated)

- green filled — The board is in service and primary
- green empty — The board is in service and backup
- yellow cr — board is out of service

Function : Status information for S100 I/O redundant boards

Plain System Message at fault :

PROC I/O ST	XX Board error	Net xx	Nod yy

Actions at fault :

1. If stat indicates erroneous, the board should be replaced
   See Section 5.4.10.1 Board and Subrack Mounted Unit Exchange
2. If the boards are out of service, see respective data base item, terminal SERVICE

Block Diagram:

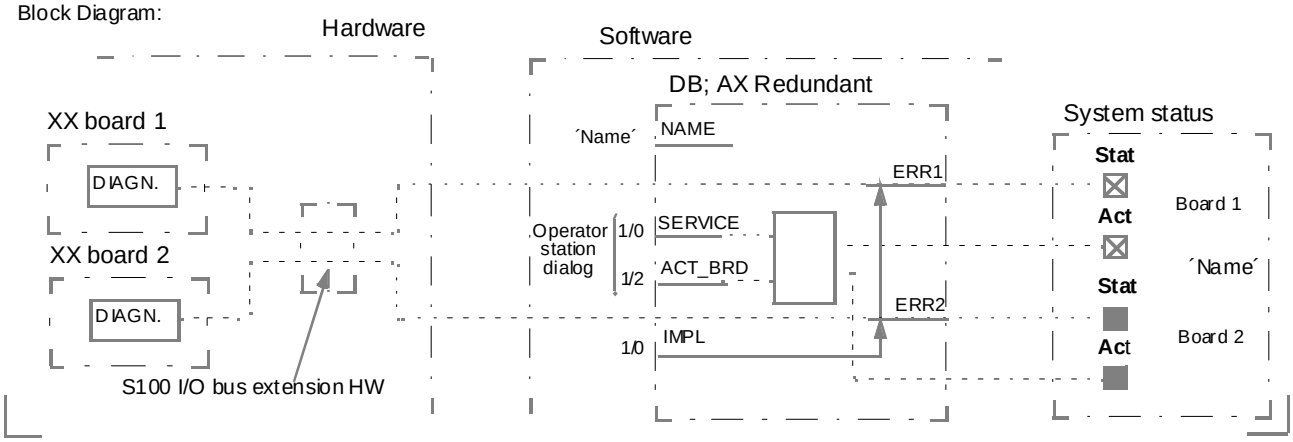

Advant Fieldbus 100

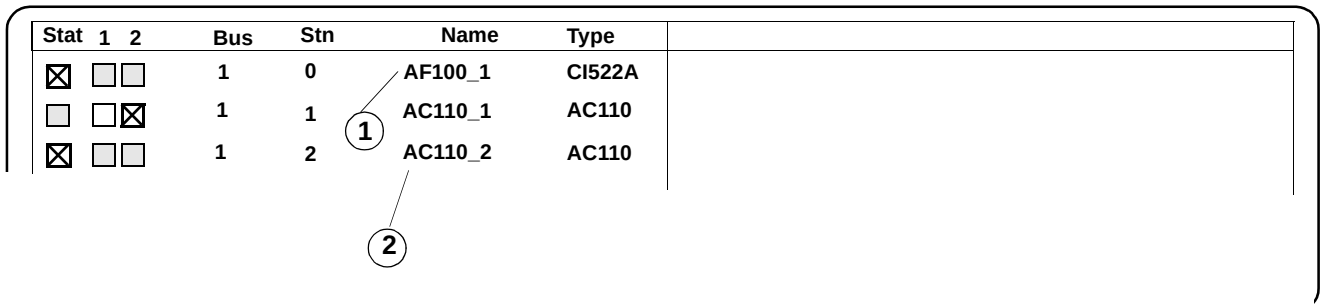

Figure 5-6. System Status Display, Fieldbus

Reference in Fieldbus Display: (1) (2)

Presentation: DB item designation for the bus/unit or a user defined unique name

(Status)

- green Normal
- yellow cr Warning
- red cr Fault - the bus/unit is erroneous

A / B (physical comm. media redundancy)

- green The A/B branch is OK
- red cr The A/B branch is erroneous

Function : Status information for an Advant Fieldbus 100 with connected stations

Plain System Messages at fault :

Fieldbus	Fatal bus error	bus no...	Net xx	Nod yy
Fieldbus	No access to stn	bus no... stn no...	Net xx	Nod yy

Actions at fault : 1. See the separate manual *Advant Fieldbus 100* and *Data Base Elements AC 400 Series*

Block Diagram:

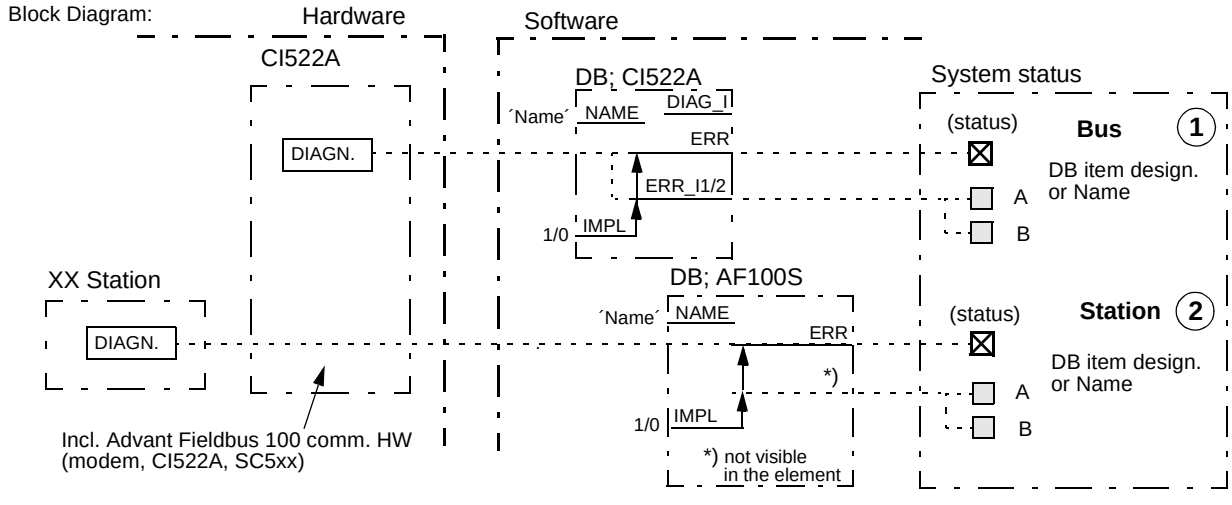

Fieldbus PROFIBUS

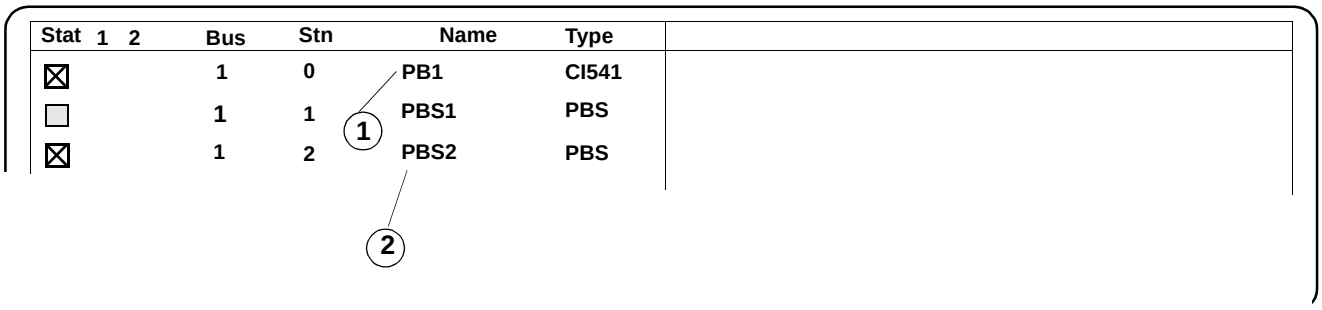

Figure 5-7. System Status Display, Fieldbus

Reference in Fieldbus Display: (1) (2)

Presentation: DB item designation for the bus/unit or a user defined unique name

(Status)

☐	green	Normal
☒	red cr	Warning
☒	red cr	Fault - the bus/unit is erroneous

Function : Status information for an PROFIBUS-DP with connected stations

Plain System Messages at fault :

Fieldbus	Fatal bus error	bus no...		Net xx	Nod yy
Fieldbus	No access to stn	bus no...	stn no...	Net xx	Nod yy

Actions at fault : 1. See the separate manual *PROFIBUS-DP* and *Data Base Elements AC 400 Series*

Block Diagram:

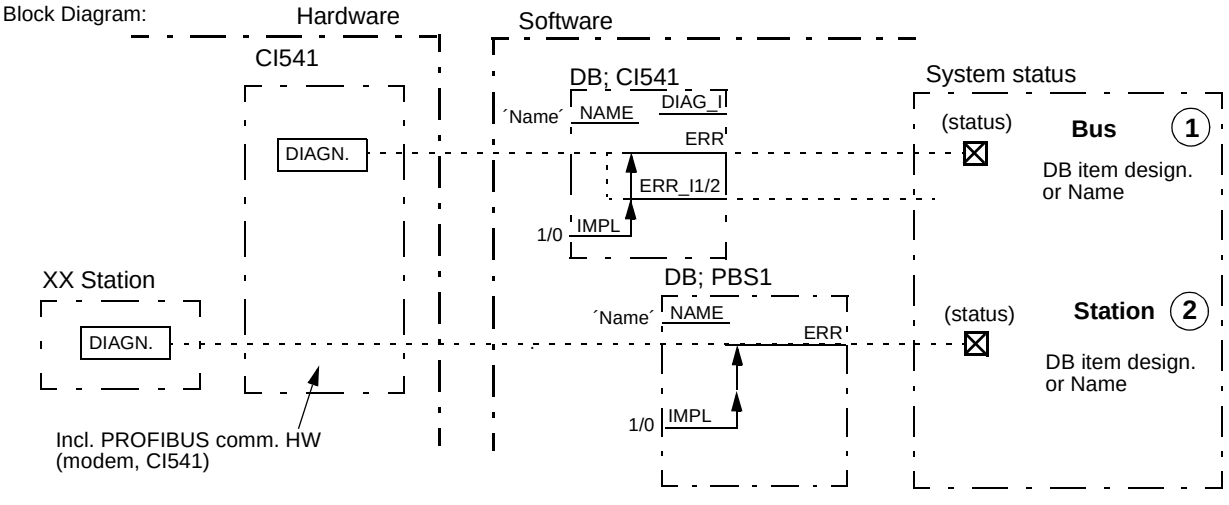

LONWORKS

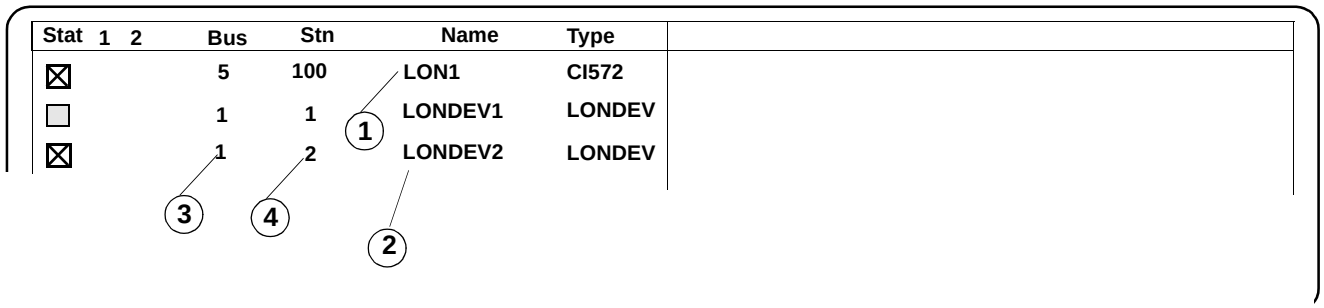

Figure 5-8. System Status Display, Fieldbus

Reference in Fieldbus Display: (1) (2) (Status)

Presentation : DB item designation for the LONWORKS Network Device or a user unique name

- ☐ green — Normal
- ☒ yellow cr — Warning
- ☒ red cr — Fault - the bus/unit is erroneous

(3) Bus column shows LONWORKS SUBNET number

(4) Stn column shows LONWORKS NODE number

Function : Status information for a LONCHAN with connected devices

Plain System Messages at fault :

Fieldbus	Fatal bus error	bus no...	Net xx	Nod yy
Fieldbus	No access to stn	bus no... stn no...	Net xx	Nod yy

Actions at fault : 1. See the separate manual *Advant Interface to LONWORKS User's Guide* and *Data Base Elements AC 400 Series*

Block Diagram :

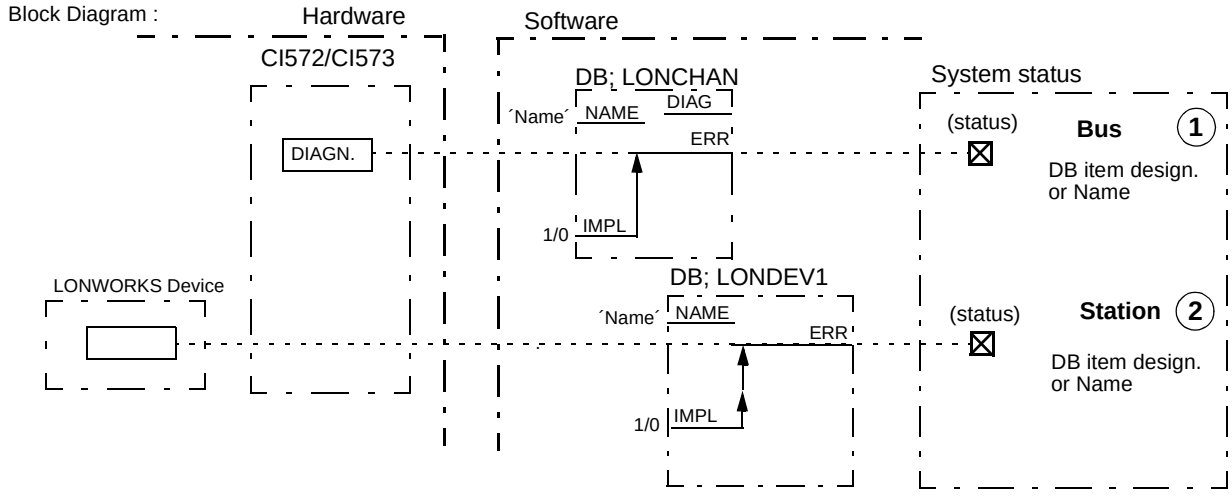

Advant Fieldbus 100 Bus Unit Display

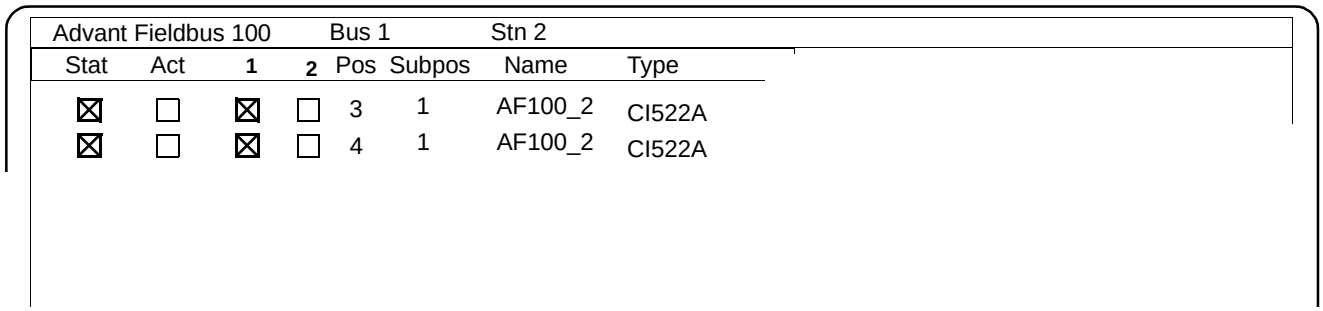

Figure 5-9. System Status Display, Advant Fieldbus 100 Bus Unit

MasterFieldbus

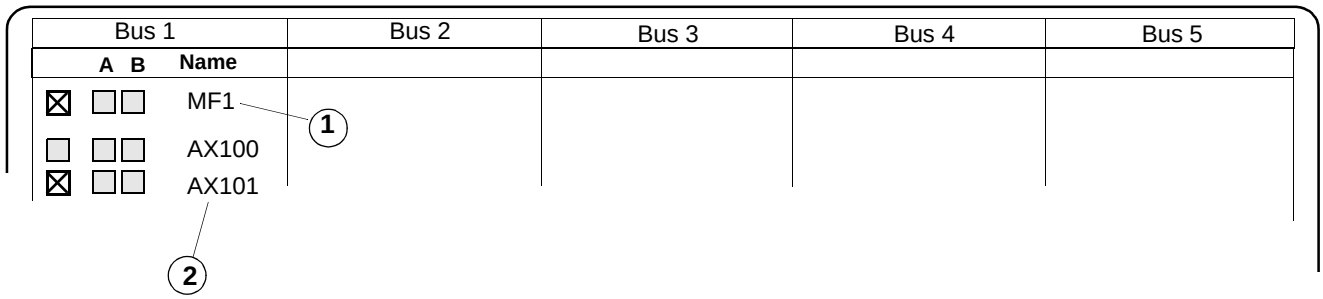

Figure 5-10. System Status Display, MasterFieldbus

Reference in MasterFieldbus Display: 1 2

Presentation: DB item designation for the bus/unit

(Status)

green Normal

red cr Fault - the bus/unit is erroneous

A / B (physical comm. media redundancy)

green The A/B branch is OK

red cr The A/B branch is erroneous

Function : Status information for a MasterFieldbus with connected S400 I/O units

Plain System Messages at fault :

MFb Status	Bus controller error	bus no...	Net xx	Nod yy
MFb Status	Cable break	bus no... node no...	Net xx	Nod yy
MFb Status	Error in	bus no...node no...	Net xx	Nod yy

Actions at fault : 1. See the separate manual *MasterFieldbus and S400 I/O*

Block Diagram :

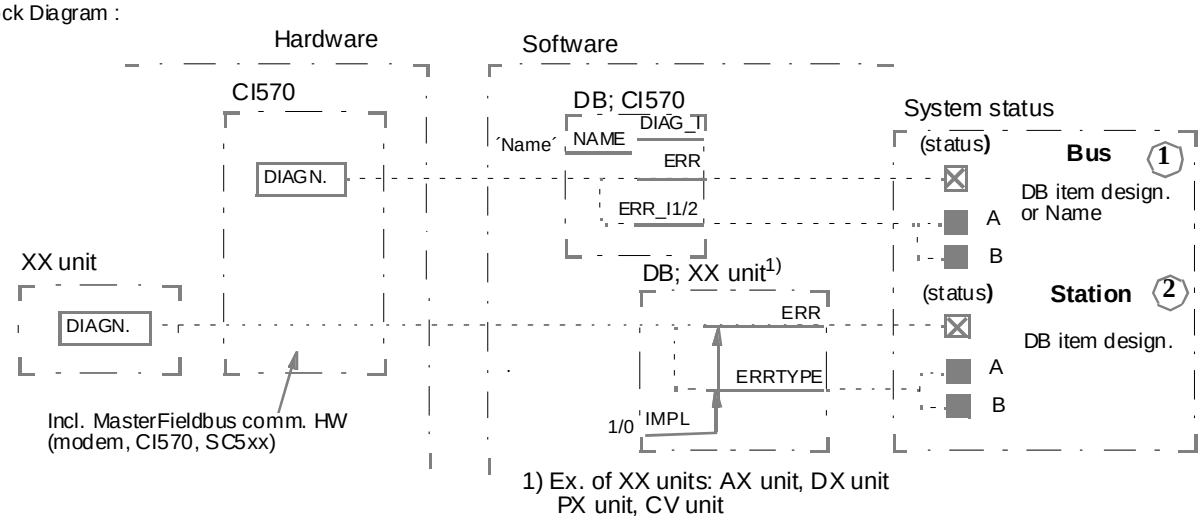

S800 I/O Station (non redundant FCI)

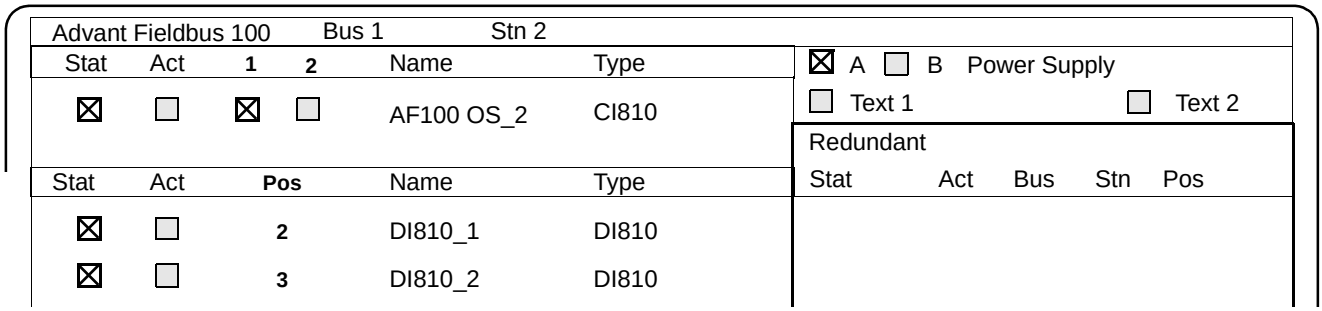

Figure 5-11. System Status Display, S800 I/O Station

Reference in S800 I/O Station status Display: 1 2

Presentation: DB item designation for the Station/Module

1 / 2 (physical comm. media redundancy)

- green The 1/2 branch is OK
- red cr The 1/2 branch is erroneous

Power Supply A/B (power supply redundancy)

- green The A/B power supply is OK
- red cr The A/B power supply is erroneous

Status

- green Normal
- yellow cr The Station/Module is in warning status
- red cr Fault - the Station/Module is erroneous

Act (Activated)

- green The Station/Module is activated
- yellow The Station/Module is deactivated
- green The Module is in OSP

Text1/Text2 (physical comm. media redundancy)

- green The "Text" is OK
- red cr The "Text" is erroneous

Function: Status information for a S800 I/O Station

Plain System Messages at fault:

Fieldbus	Module error,	bus no... stn no... pos no...	Net xx	Nod yy
Fieldbus	Power supp A error	bus no... stn no...	Net xx	Nod yy
Fieldbus	Module warning	bus no... stn no... pos no...	Net xx	Nod yy

Actions at fault:

1. See the separate manual *S800 I/O User's Guide*

Block Diagram:

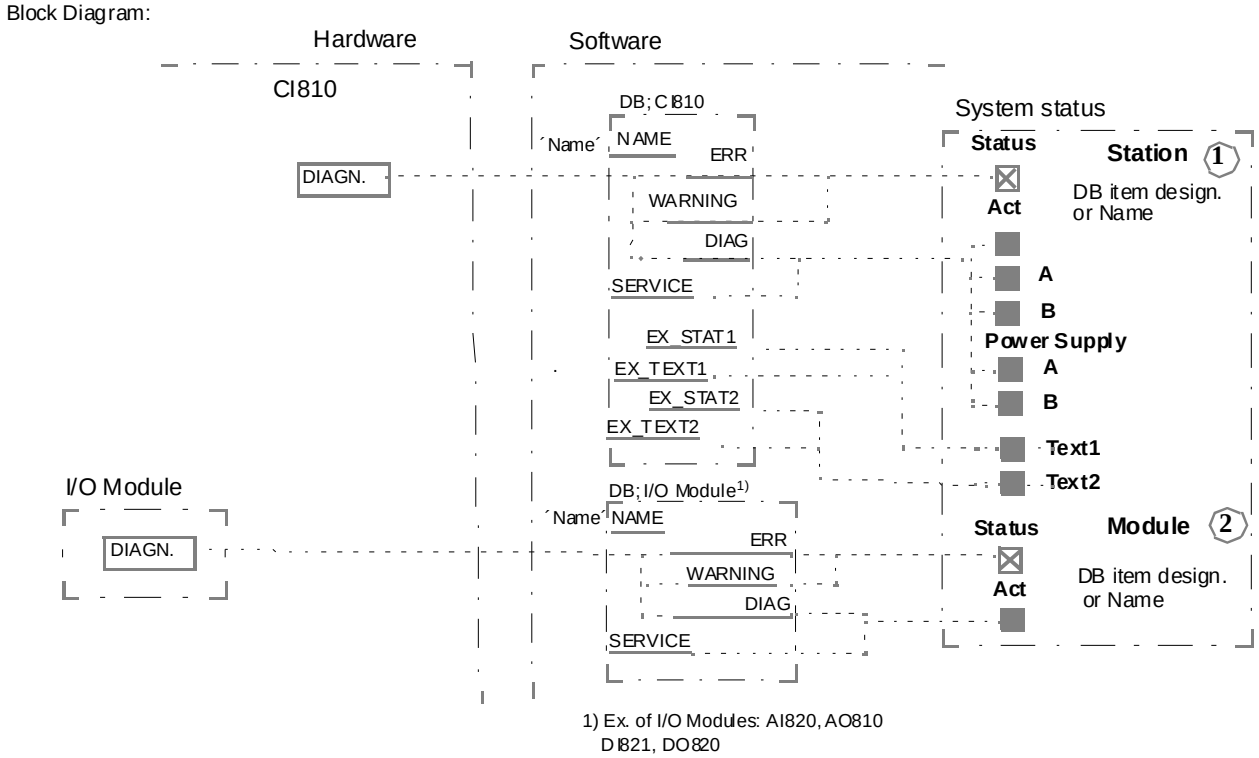

1) Ex. of I/O Modules: AI820, AO810
DI821, DO820

S800 I/O Station (redundant FCI's)

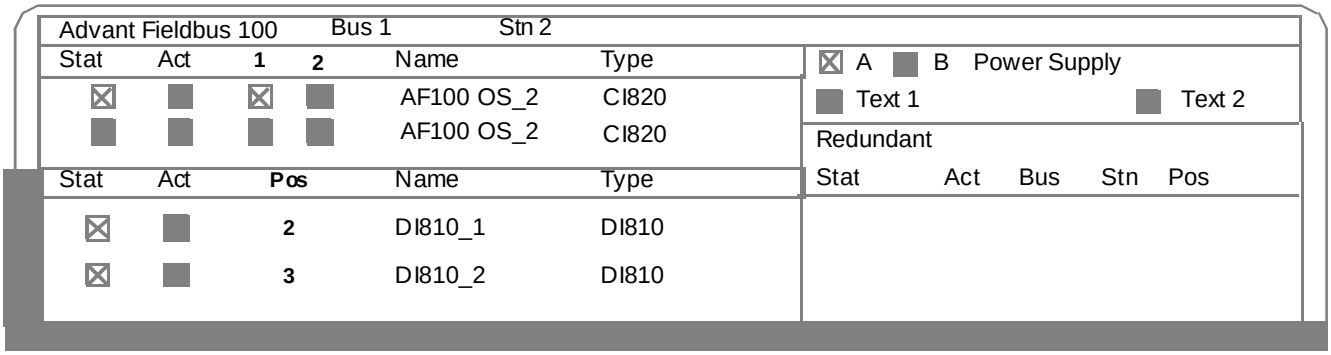

Figure 5-12. System Status Display, S800 I/O Station

Reference in S800 I/O Station status Display: (1) (2)

Presentation: DB item designation for the Station/Module

1 / 2 (physical comm. media redundancy)

- green — The 1/2 branch is OK
- red cr — The 1/2 branch is erroneous

Power Supply A/B (power supply redundancy)

- green — The A/B power supply is OK
- red cr — The A/B power supply is erroneous

Status

- green — Normal
- yellow cr — The Station/Module is in warning status
- red cr — Fault - the Station/Module is erroneous

Act (Activated)

- green — The Station/Module is activated
- yellow — The Station/Module is deactivated
- green — The Module is in OSP

Text1/Text2 (physical comm. media redundancy)

- green — The "Text" is OK
- red cr — The "Text" is erroneous

Function: Status information for a S800 I/O Station

Plain System Messages at fault:

Fieldbus	Module error,	bus no... stn no... pos no...	Net xx	Nod yy
Fieldbus	Power supp A error	bus no... stn no...	Net xx	Nod yy
Fieldbus	Module warning	bus no... stn no... pos no...	Net xx	Nod yy

Actions at fault: 1. See the separate manual *S800 I/O User's Guide*

S100 I/O Bus Extender

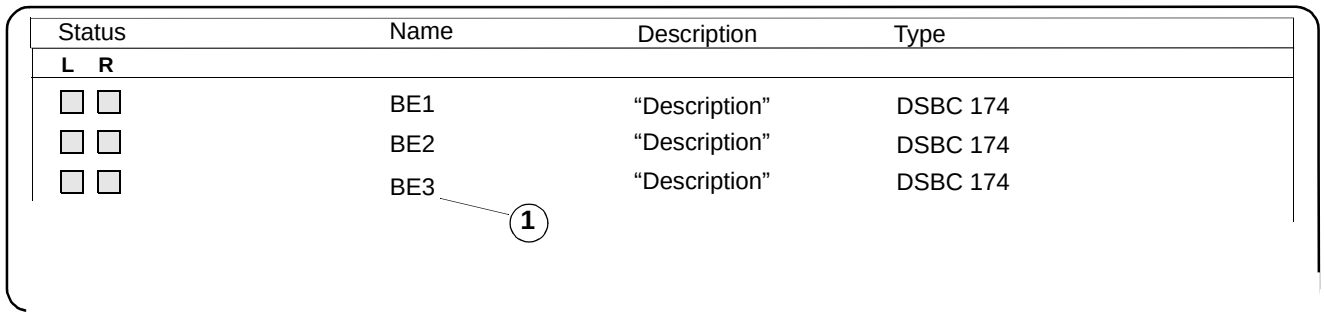

Figure 5-13. System Status Display, S100 I/O Bus Extender

Reference in S100 I/O Bus Extender Display: (1)

Presentation: User defined name (default DB: item designation) (R is only relevant when redundant bus extenders are used)

Status (L, R)

☐	green filled	The board is primary
☐	green empty	The board is in backup
☒	yellow cr	The board is in warning status
☒	red cr	The board is erroneous

Function : Supervision of S100 I/O Bus Extenders

Plain System Message at fault :

PBC STATUS	Bus Extender error	Net xx	Nod yy

1. Check the communication link with respect to damage, loose connector, broken wire, etc.
2. Replace the faulty bus extender DSBC 174 or DSBC 176

Block Diagram:

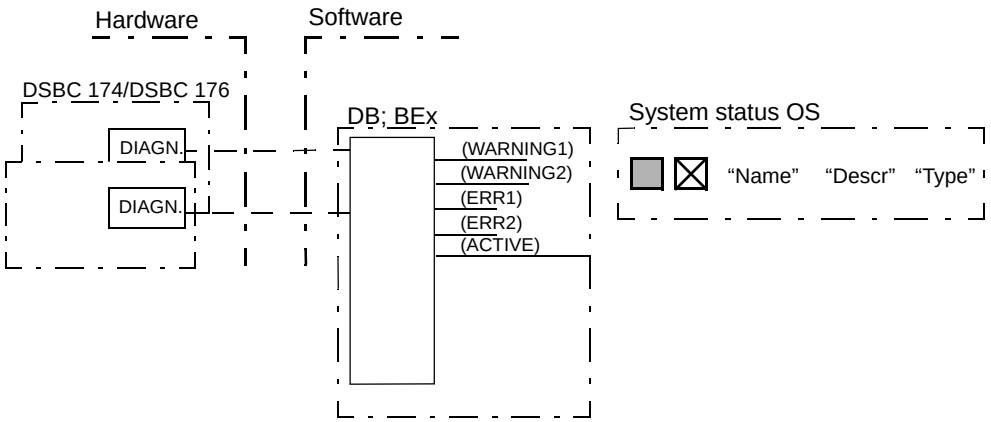

5.5.3 Fault Finding Principles

Introduction

Perform fault finding in a systematic and logical manner.

You must make a distinction between a system which has been in operation and a system which has not been operated previously. In the latter case, always check the following indications first, if relevant:

- The cabinet has mains voltage connected
- All circuit boards are plugged in correctly
- All connections are made correctly
- All boards are jumpered correctly.

If these checks do not correct the malfunction, continue with the procedures described below.

Fault Finding Principles

You are notified of a fault in one or several ways, as described in Section 5.5.2, Diagnostics and Fault Announcement.

Three main "gateways" to the source of failure can be distinguished. Figure 5-14 illustrates the notification of faults and the principles for fault finding.

If a central operator station is available, you should especially watch for opportunities to point out a faulty replaceable unit outgoing from a system message and information given in the system status displays. See Section 5.5.2.1, System Status and Plain Language System Messages. You can treat most fault finding then, in principle, as indicated under the heading **Typical Simple Scenario** below.

In a more complicated situation, other measures are applicable.
See **A Complex Scenario** below.

The concept of FDS and LDS in Figure 5-14 represents different qualities of diagnostics support:

FDS - Full Diagnostics Support

A faulty unit/function is pointed out.

LDS - Limited Diagnostics Support

A complex indication exists which warrants further manual fault finding.

With respect to the necessary outfit when fault finding and, to a certain degree, the need for skilled personnel, there is a division in basic and advanced fault finding.

Basic fault finding with full diagnostics support is covered by this User's Guide. Advanced fault finding with limited diagnostics support is only briefly dealt with here.

Advanced fault finding presume practical knowledge in fault finding. Training courses are arranged by Automation University Sweden, Training Center.

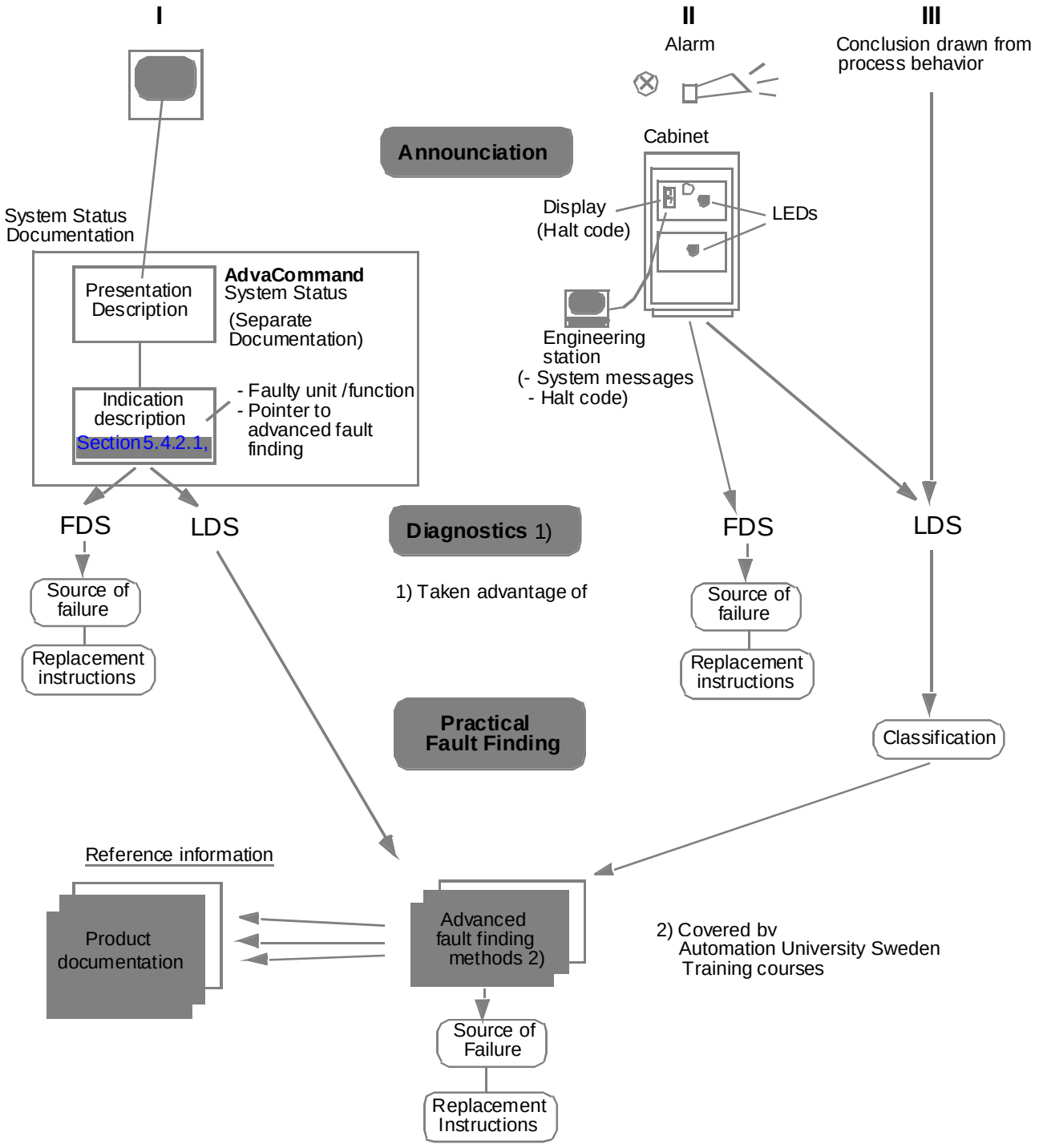

Figure 5-14. Fault Finding Principles

Typical Simple Scenario

A typical simple scenario for a network connected controller follows.

1. A system message appears on the operator station display screen. The message is: fatal error in I/O board, data base item designation XX.
   You can find cross-references to board type and physical location in the data base documentation and the equipment delivery documentation.
2. One or several process alarms appear as a consequence.
3. The system status display for the actual controller (node) shows the status of the faulty board.
4. In the controller or I/O cabinet, the board in question indicates red LED FAULT.
5. Replace the board on-line, that is when the controller is in full operation otherwise.

See the sections below for safety regulations and instructions on how to replace an I/O board. Other replacement instructions, of course, apply in other situations.

A Complex Scenario

The system diagnostics does not always point out a replaceable unit. Fault finding must be done. In, for example, a stand-alone system, the following may happen:

1. An audible alarm initialized by the run/alarm relay indicates controller shut-down.
2. If installed in any redundant system, process alarm and process shut-down indications appear as a consequence.
3. In the controller cabinet, perhaps a complex indication exists. Different red LEDs light up. An halt code is shown on the processor module character display.
4. The fault is classified by you with respect to the indications. See Section 5.5.4, Fault Classification and Scheme of Measures.
5. Outgoing from the fault classification you will probably proceed with advanced fault finding. Some hints and general fault finding procedures are given in the following sections. However practical experiences from a training course is normally needed to get to the source of failure.
6. When localized, the faulty module is replaced.
   Common user repair is described in Section 5.5.10, User Repair.
7. For instructions for restarting a system after a fault is corrected, see Section 5.5.16, System Restart, INIT.

A general rule when dealing with complex indications is:

A fault indication in a superior function makes indications in subordinated functions mostly inapplicable.

For example, if the processor module indicates red FAULT, there is probably no relevance in any red FAULT indications on communication modules.

5.5.4 Fault Classification and Scheme of Measures

To guide in the advanced fault finding a rough fault classification is made outgoing from the indications provided by the available diagnostics functions.

Advanced fault finding is not the object of this User's Guide. However some trial might be successful. Hints are referred. A classification is valuable too when ordering support from ABB.

Faults are classified in the following four groups **A.....D**:

A. Faults in the power supply system.

If there is no power supply redundancy, a serious supply failure will result in a controller shut down.
These types of failures are distinguished from other failures, which also results in shut down, by the lack of indications like voltage regulator LED 5 V and power distribution unit LED LIVE (24 V). See further information in Section 5.5.9.5, Check of Power Supply.

B. Faults which do not stop the system.

If the RUN LED indicator on processor module front is turned ON but not the HLT LED, the system is probably still functional.
Look for red LEDs in the cabinet and try to define the limited part of the controller which fail. Then see a suitable "Check..." instruction in this Chapter 5, Maintenance.

C. Faults which stop the system.

The red HLT indicator on the processor module front is turned ON to indicate that the system has stopped.
It is probably meaningful to try a system restart. Especially if a software error is verified by halt code or system message. See Section 5.5.16, System Restart, INIT.

Hardware faults also result in system halt (HLT). Section 5.5.9.9, Fault Finding by Reducing the System gives adequate information.

D. Faults which give no indications by the built-in diagnostics.

Ask for support from ABB.

5.5.5 Test Equipment

The character display on the processor module front showing error codes and the indicating LEDs on the specific hardware modules are normally sufficient aids when finding faults.
The following equipment simplifies the work and should be available:

Basic Fault Finding

- Digital multimeter for calibration and test purposes.
- Test leads with 4 mm banana contacts and 2 mm reducer sockets.
- Ordinary hand tools.
- Necessary parts of the documentation listed in Section 1.4, Related Documentation.
- Specific documentation enclosed at delivery, drawings, and so on.
- Spare units and fuses. (The type and catalogue numbers for all units included in the Advant Controller 450 delivery are given in the apparatus list.)

Advanced Fault Finding

In addition:

- Advant Station 100 Series Engineering Station or Advant Station 500 Series Engineering Station (with option On-line Builder).

5.5.6 Safety Regulations

The instructions given in Section 5.1.1, Safety Regulations are always to be followed when installing, fault finding and operating an Advant Controller system to minimize the risks of injury to personnel and damage to the equipment. Local statutory regulations, to the degree that they are more strict are to take precedence.

In connection to faults, fault finding and user repair there are some specific additional safety regulations and aspects on safety. Please refer to:

- Section 5.5.7, On-line/Off-line Aspects
- Section 5.5.9.3, Safety at Start/Stop
- Notes in the "Check..." instructions and user repair instructions given.

5.5.7 On-line/Off-line Aspects

In connection to fault finding and user repair a primary decision has to be made whether the work has to be carried out on-line (if relevant) or off-line or with the mains supply disconnected.

On-line means that all work is carried out while the controller is in full operation.

Off-line here means that the controller is shut down to a safe position, working mode STOPPED. The mains supply is still switched on.

This is a question of system availability, possibility of fault finding, and safety.

If redundant functions are included then the system availability probably is given precedence. Most modules located in subracks can be replaced on-line. However not all of them. See Section 5.5.10.1, Board and Subrack Mounted Unit Exchange.

Due to the risk of manual mistake in on-line handling and possible severe consequences to the process controlled you are recommended to use this facility restrictively.
The most confident way of working is:

- Stop the system during fault finding
- Switch off the mains voltage supply during unit replacement and when a new function is installed.

Disconnection of the mains supply may have impact on dynamic information stored in the application program. For example counter/register content, integrator content and so on will be lost if not secured by special considerations in the application program design. However this is general design considerations. The controller should manage "normal" mains supply interruptions.

5.5.8 Connection of Engineering Station

The engineering station communication cable can be plugged into the service port X10 on the Processor Module PM511 front any time.

- First connect the communication cable
- Then switch on the power supply to the engineering tool.

Prepare for a session of programming Advant Controller 450.
Follow the instructions on the screen.

Work with the engineering station is supported by adequate documentation.
The detailed information of different configuration activities using an engineering tool is given in the reference manual *AMPL Configuration Advant Controller 400 Series*.

If the actual Advant Controller 450 is a node in a LAN, the engineering station can be connected to any of the nodes included in the network. Remote configuration/maintenance can be performed in that way.

Additional Information for Redundant Processor Modules

Connection to Primary Processor Module

Connect the engineering station to the processor module which is PRIMARY ("P1" or "P2" on the number display). The operation of the engineering station/target system does not differ from its operation in a system without redundancy.

Following a changeover, the engineering station loses contact with the target system, since the processor module to which it is connected has failed. In order to reconnect the aid with the target system, connect the engineering station cable to the new primary unit's service port. Work can then continue, once contact with the target system has been established (RECONNECT).

Remote configuration via LAN is not influenced by a changeover.

Connection to Backup Processor Module for Maintenance

Maintenance can be performed on the backup module while it is in the OFFLINE mode while the primary module is operating normally at the same time. The primary module is not affected.

- The engineering station is connected to the backup module.
- The start mode selector on the backup module is set to 4, the OFFLINE position.
- Restart in OFFLINE mode by depressing the ENTER button on the **backup module.**

NOTE

Make sure that the operations are being performed on the backup module!

All maintenance functions that can normally be performed in the OFFLINE mode can now be carried out, except for referencing process I/O modules.

5.5.9 List of General Fault Finding Procedures and Hints

5.5.9.1 Location of Malfunction

Sometimes you lack information from the controller diagnostics, telling you where the fault is located. Suspicion about a fault is raised by the process behavior.

Experience indicates that approximately 85% of all faults occur in the process, 10% occur in the control program and 5% occur in the control system hardware.

It is advisable for you to localize the malfunction with these figures in mind to minimize the down-time.

5.5.9.2 External Factors

In an electronics system which has given satisfactory service, most malfunctions have external causes. It is, therefore, important when you are tracing a fault to determine if any external factor such as incorrect handling of the equipment, short circuits, welding work, lightning strike and/or power failure has caused the malfunction.

5.5.9.3 Safety at Start/Stop

The Advant Controller 450 can perform the control functions while operating normally. Voltage failure, component fault or manual restart usually affect the control system function. Control system failure affects the process in different ways, more or less serious:

- In a control system with a monitoring character, changes in the process status are not registered, but there is no immediate danger to the process.
- Control of continuous processes in, for example rolling mills and pulp and paper manufacture demands a high degree of continuity of the control system function. An uncontrolled restart of the Advant Controller 450 can have very serious consequences.

DANGER - CAUTION

It is important to be aware of the local requirements for safety when starting and stopping the Advant Controller 450.

5.5.9.4 Manual Changeover between Redundant Processor Modules

For a demonstration of a changeover or if one suspect that a primary processor module is not functioning to its full capacity, a manual changeover can be effected.

Manual Changeover

Prior to the Changeover. Check

- DUAL LED's on both processor modules lit
- Start mode selector on both processor modules in the same position (for example AUTO)
- Primary processor module in working mode P1 or P2 (P1 = OPERATION, P2 = CONFIGURATION)

- Backup processor module in working mode b1
  (b1 = STANDBY)

Execution

- Stop the primary module by setting the start mode selector in position 2 (STOP).
  Then depress the ENTER button.

Operation

- Changeover takes place immediately
- Indication
- New primary module indicates P1 or P2 (unaltered)
- Former primary module indicates working mode -3 (STOPPED)
- DUAL LED's on both processor modules off.
  Indicating that the status now is single.

Restoring of a new Backup

Execution

- Set the start mode selector in the same position as the primary module's
- Depress the ENTER button on the proposed backup module

Operation

- The backup module will pass through the phases of boot-loading (-L), UPGRADING (b2), and end up in working mode STANDBY (b1)

Indication

- Primary module indicates P1 or P2 (unaltered)
- Backup module indicates b1
- DUAL LED's on both processor modules lit

That is, the changeover is completed.

5.5.9.5 Check of Power Supply

The following instructions convey principles in fault finding and are supported by the power supply block diagrams Figure 1-12 and Figure 1-13 in chapter 1. These figures provide:

- Structure of apparatus used
- Presence and location of circuit breakers
- Presence and location of miniature circuit breakers (MCB's) and fuses
- Test facilities (for voltage measuring)
- Indications to be used (LED's).

Further details regarding connections, type of units used and so on can be found in the circuit diagram attached the delivery.

Appendix A, Hardware Modules gives module/unit information including description of the function, block diagram, technical data, maintenance parts and so on.

Two variants of power supply system are dealt with:

- a.c. mains supply (no redundancy)
- Redundant a.c. mains supply and redundant power supply regulators (total redundancy).

The general instructions also are valid for d.c. mains installations and partial redundancy.

a.c. Mains Supply
(no redundancy)

In a power supply system which includes no redundancy a serious power failure will result in the controller total shut down **(Scenario A)** or a loss of an entire I/O subrack functionality including all the I/O modules **(Scenario B)**.
These situations are notified by:

Scenario A

- An operator station connected to this controller.
  Indications obtained by:
  - System message
  - System status display (see Section 5.5.2.1, System Status and Plain Language System Messages)
  - Lost communication
- Run/Alarm relay contact opens
- Process behavior
- Green RUN LED on processor module PM511 is OFF
- All LED's in the cabinet are OFF. Besides those included in the RAM backup power supply system. Thus:
  - SB510/511, the LED BP will be ON
  - PM511, the LED BC will be ON.

Scenario B

- An operator station connected to this controller
  Indications obtained by:
  - System message
  - System status display (see Section 5.5.2.1, System Status and Plain Language System Messages)
- Process behavior
- Green RUN LED on processor module PM511 is ON
- All LEDs on the modules located in the dead I/O subrack is OFF.

General

Fault finding in the controller cabinet is carried out as follows.
Before replacing a power supply unit or a fuse or resetting a MCB try to check for a reason of the fault. If deemed too time consuming, it is always possible to try the easy way and "look for the smoke".

Scenario A - Fault Finding

Total shut down is verified.
First guidance and measures to be taken, see Figure 5-15.

SR511 LEDs			Diagnostic	Replace or continue with
F	**2 V**	**5 V**		
OFF	ON	ON	Normal operation	------
ON	ON	ON	Overvoltage	Replace SR511 [1]
ON	ON	OFF	Low 5 V voltage	Replace SR511 [1), 2)]
ON	OFF	ON	Low 2 V voltage	Replace SR511 [1]
OFF	OFF	OFF	Lost 24 V voltage	See Figure 5-19
ON	OFF	OFF	Low 24 V voltage or 5 V reg. fault	1. See Figure 5-19 2. Replace SR511 [1]

1) See Section 5.5.10.5, Replacement of 5 V Regulator

2) If fault remains there is an overload in the controller subrack

Figure 5-15. First Guidance, Scenario A

Scenario B - Fault Finding

Shut down of an I/O subrack is verified. The controller is operating otherwise. Green LED on processor module is ON.

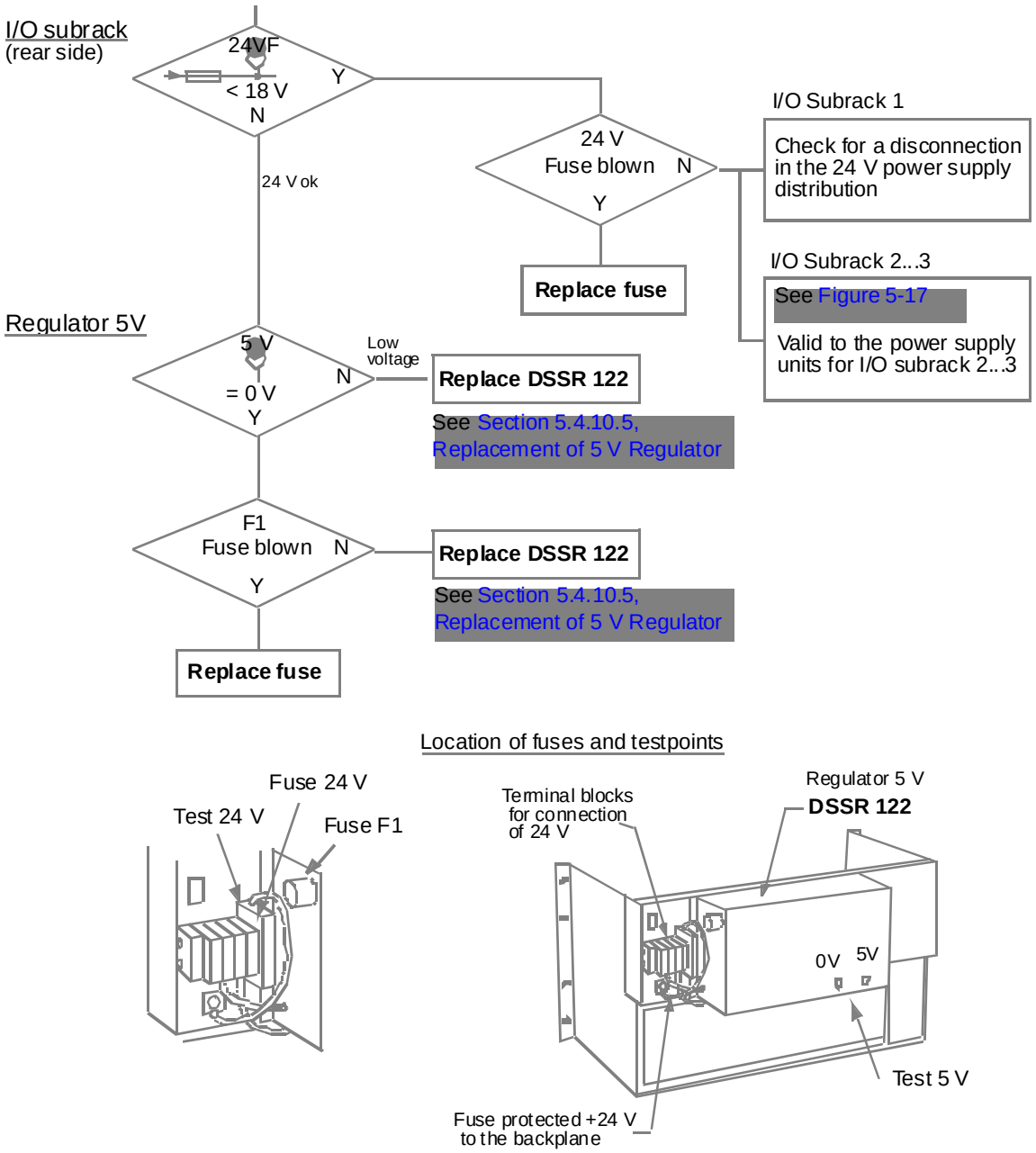

Figure 5-16. Fault Finding, B

Redundant a.c. Mains Supply and Redundant Power Supply Regulators
(Total redundancy)

In an Advant Controller which includes total power supply redundancy, the probability for a shut down caused by a single power supply failure is extremely small. That is the controller will still be operational when a single failure exists. Diagnostics support is available. A detected failure must be taken care of as soon as possible to regain redundancy. Normally a faulty unit can be replaced on line.

Two scenarios are described. A single failure in the controller power supply (**Scenario C**). And a single failure in an I/O subrack power supply (**Scenario D**).

These situations are notified by:

Scenario C

- An operator station connected to this controller.
  Indications obtained by:
  - System message
  - System status display.
    The faulty power supply branch A or B is pointed out.
    Failure in the 5 V regulators is pointed out.
    (see Section 5.5.2.1, System Status and Plain Language System Messages).

Scenario D

- An operator station connected to this controller
  Indications obtained by:
  - System message
  - System status display.
    The faulty power supply branch A or B is pointed out.
    Failure in the 5 V regulators is pointed out
    (see Section 5.5.2.1, System Status and Plain Language System Messages).

General

Fault finding in the controller cabinet is carried out as follows.
Before replacing a power supply unit or a fuse or resetting a MCB try to check for a reason of the fault. If deemed too time consuming, it is always possible to try the easy way and "look for the smoke".

Scenario C - Fault Finding

Disturbance in the controller power supply is verified.

First guidance and measures to be taken, see Figure 5-15.

SR511 LEDs			Diagnostic	Replace or continue with
F	**2 V**	**5 V**		
OFF	ON	ON	Normal operation	-----
ON	ON	ON	Overvoltage	Replace SR511 [1)]
ON	ON	OFF	Low 5 V voltage	Replace SR511 [1),]
ON	OFF	ON	Low 2 V voltage	Replace SR511 [1)]
OFF	OFF	OFF	5 V regulator fault	Replace SR511 [1)]
ON	OFF	OFF	5 V regulator fault	Replace SR511 [1)]

1) See Section 5.5.10.5, Replacement of 5 V Regulator

Figure 5-17. First Guidance, Scenario C

Scenario D - Fault Finding

Disturbance in the I/O subrack power supply is verified.

First guidance and measures to be taken, see Figure 5-18.

I/O Subrack **1** LEDs

DSSS 171					DSSR 170		**Diagnostic**	**Replace or continue with**
ALIVE	**AFAIL**	**BLIVE**	**BFAIL**	**PBC**	**LIVE**	**FAIL**		
ON	OFF	ON	OFF	ON	ON	OFF	Normal operation	-----
ON	OFF	ON	OFF	ON	OFF	ON	Regulator fault	Replace actual DSSR 170 [1]
OFF	ON	ON	OFF	ON	ON	OFF	Supply branch A fault	1. First check the fuses F501/F502 on I/O subrack DSRF 187A (rear side) 2. Check for a disconnection in the 24 V power supply distribution
ON	OFF	OFF	ON	ON	ON	OFF	Supply branch B fault	

I/O Subrack **2..3** LEDs

DSSS 171					DSSR 170		**Diagnostic**	**Replace or continue with**
ALIVE	**AFAIL**	**BLIVE**	**BFAIL**	**PBC**	**LIVE**	**FAIL**		
ON	OFF	ON	OFF	ON	ON	OFF	Normal operation	-----
ON	OFF	ON	OFF	ON	OFF	ON	Regulator fault	Replace actual DSSR 170 [1]
OFF	ON	ON	OFF	ON	ON	OFF	Supply branch A fault	1. First check the fuses F501/F502 on I/O subrack DSRF 187A (rear side) 2. Then see Figure 5-19 [2]
ON	OFF	OFF	ON	ON	ON	OFF	Supply branch B fault	

[1] See Section 5.5.10.5, Replacement of 5 V Regulator

[2] Valid to the power supply units for I/O subrack 2...3

Figure 5-18. First Guidance, Scenario D

Mains Supply and 24 V Power Supply - General Fault Finding

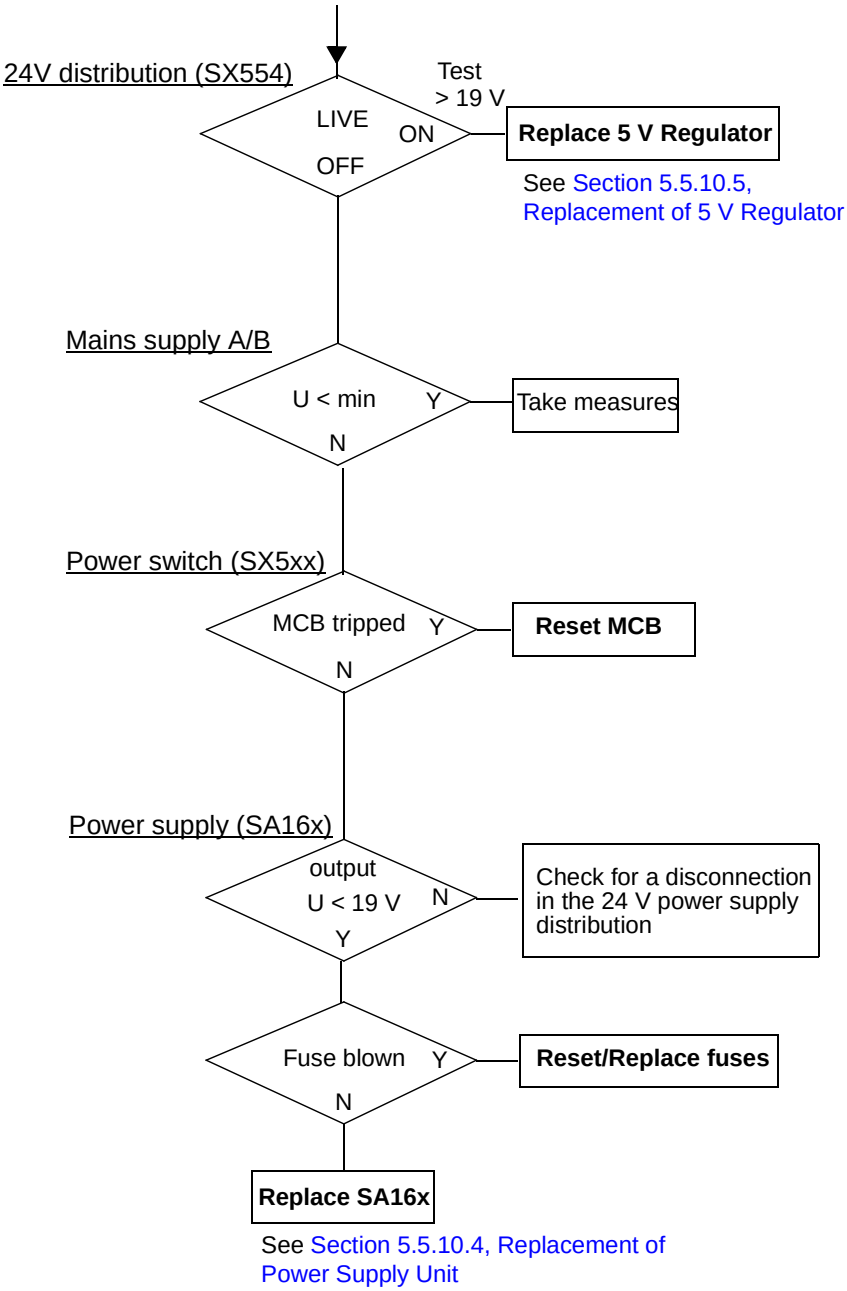

Figure 5-19. Fault Finding, Mains Supply and 24 V Power Supply

5.5.9.6 Check of Backup Power Supply

The backup power supply and battery diagnostics are indicated in the system status display (see Section 5.5.2.1, System Status and Plain Language System Messages) and by LEDs on the Backup Power Supply SB510/511 front.

Fault finding in the controller cabinet is carried out as described in Figure 5-20.

The instructions are supported by the power supply block diagrams Figure 1-12 and Figure 1-13 in Chapter 1, Introduction.

SB510/511 L				Diagnostic	Replacement or other measures [3]
F	**BF**	**BP**	**IP**		
OFF	OFF	OFF	ON	Normal operation	------
OFF	OFF	OFF	OFF	Lost supply voltage or blown fuse F1	1. See notes below [1), 2)] 2. Replace fuse in SB510/511
OFF	ON	OFF	ON	Battery fault	Replace battery unit SB522
ON	ON	OFF	ON	Battery fault	Replace battery unit SB522
ON	OFF	---	ON	SB510/511 fault	Replace SB510/511
ON	ON	---	ON	Battery fault or SB510/511 fault	Replace battery unit first. Make a test. If not successful replace SB510/511

Description of LED Indications

F Fault
BF Battery Fault
BP Battery Powered
IP Input Power
FC Forced Charging

Check for lost supply voltage

1) If SB510, check mains C or tripped miniature circuit breaker in power switch unit

2) If SB511, check tripped miniature circuit breaker in the 24 V distribution unit

3) Replacement instructions in Section 5.5.10.6, Replacement of Backup Power Supply and Section 5.5.10.7, Battery Exchange

Figure 5-20. Check of Backup Power Supply

5.5.9.7 Check of Processor Module

A description of the indicators on the module front is given to guide in the fault finding.

- Red LED F means module fault or a software error (not so likely). Replace the processor module.
- Green LED RUN means module running normally.
  The LED is turned off as a result of all kinds of system halts. If the green LED is turned off read the system halt code on the character display and analyses the problem primarily as described in Section 5.4, Error Messages. Take recommended measures. If not successful you should methodically follow the fault finding instructions elsewhere in this chapter.

- Red LED HLT (HaLTed) means a serious fault. The controller has stopped. The system halt information is probably missing or incomplete. The recommended actions are:

1. Restart the controller. See Section 5.5.15, System Restart following Maintenance Activities.
   If HLT still occurs it is possible to interpret new halt code information from the display and continue with step 2.
2. Reload the software and restart. See example in Section 5.5.17, Loading of Application Program.
   If HLT still occurs continue with step 3.
3. Replace the processor module.

- Yellow LED TO (Time Out). Normally OFF. Sometimes it flashes under normal conditions to indicate that an I/O board has been addressed but does not respond. A board can be withdrawn for repair or a board can fail.
- Green LED BC means that the backup voltage for RAM is connected
- Green LED DUAL means that a redundant processor is ready. If the controller includes two processor modules both of them should normally indicate DUAL.
- The character display normally show the working mode of the controller (P1, P2 and so on). See Chapter 4. If anything else is presented, the system has probably stopped and the stop code can be read from Section 5.4, Error Messages. This section also includes corrective actions.
- The four LEDs close to the service port show the status of the communication with a connected engineering station
  - Yellow LED HI I - High speed input
  - Yellow LED HI O - High speed output
  - Yellow LED LO I - Low speed input
  - Yellow LED LO O - Low speed output.

5.5.9.8 I/O

This section deals with the S100 I/O. Follow the instructions and make conclusions applicable. The corresponding information for the S400 I/O and S800 I/O can be found in a separate user's guide *MasterFieldbus and S400 I/O* and *S800 I/O User's Guide* respectively.

- Each I/O board has a red Fault indication LED. Replace a board with a LED which indicate a fault. First read Section 5.5.10.1, Board and Subrack Mounted Unit Exchange.
- Check whether the circuit board is activated in the data base.
- If all I/O boards indicate fault check that the system is not in CONFIGURATION mode.

- If all the boards with fault indications are in the same subrack, the fault is probably in the bus extension to S100 I/O
  - Check connections and cables.
  - Check and replace the bus extender DSBC 174 located in the I/O subrack. Or replace modems in an, if available, optical bus extension.

CAUTION

DSBC 174 or DSBC 176 can not be replaced while power supply is switched on when used in single S100 I/O Bus Extension configuration.

NOTE ALSO!

If the supply to a subrack is switched on before the DSBC 174 or DSBC 176 is in place, the process outputs in the subrack can set themselves in optional states!

- If the fault indicating LEDs on several I/O boards illuminate, follow instructions in Section 5.5.9.9, Fault Finding by Reducing the System.
- Check the process signal status.
  The status of the digital signals (DSDI, DSDO) is indicated for each signal connection to the process by a yellow LED. The values of analog signals can be measured at test points on the front panel. Detailed information can be found in the manual *S100 I/O Hardware*.
- Check the power supply units for the actual I/O subrack. Check for blown fuses and other reasons for voltage disconnection.
- Check fuses for process signals. Most connection units contain fuses. The coupling is shown in the circuit diagram for the equipment delivered.
- Check signal levels on the connection unit screwed terminal. Use a digital voltmeter and connect to the measurement terminal on the terminal blocks.
- Check the signal values in the data base in accordance with the instructions in the reference manual *AMPL Configuration Advant Controller 400 Series.*
- Check the signal values in the PC diagram in accordance with the instructions in the manual *AMPL Configuration Advant Controller 400 Series.*

5.5.9.9 Fault Finding by Reducing the System

Another fast and commonly used method of fault finding, in more complex situations, when halt code and system messages pointing out the faulty module are missing, is to reduce the system to a minimum by withdrawing all boards except certain main boards and then returning them to their places one by one until the fault recurs.

CAUTION

The I/O S100 bus extension board DBC174 or DSBC 176 can not be treated that way while power supply is switched on when used in single S100 I/O Bus Extension configuration.

NOTE ALSO!

If the supply to a subrack is switched on before the DSBC 174 or DSBC 176 is in place, the process outputs in the subrack can set themselves in optional states!

You should carefully follow general instructions and the information attached each board/unit type in Section 5.5.10.1, Board and Subrack Mounted Unit Exchange.

The consequences to the process controlled must also be considered.

Proceed as follows:

1. Note the halt code on the processor module character display and the red LED indicators, throughout the controller and its I/O, which illuminate
2. Perform a warm start that is an initialization with the start mode selector in position 1 (AUTO). If not successful continue at step 3.
3. Reduce the system until only the following modules remain
   - 5 V Regulator SR511
   - Processor Module PM511 including a program card
4. Perform a new warm start. If the system does not start continue at step 5. If the system starts the fault is probably in the communication or the I/O system. Continue as follows:
   a. Expand the system by returning modules to their original location.
   b. First add Backup Power Supply SB510/511, System Status Collector TC520 and remaining submodule carriers with communication interface modules, then the S100 I/O boards, one at a time, until the fault reappears.
   c. Replace the module in which the fault appears.
   d. Perform a warm start.
5. Perform a cold start i.e depress the ENTER button with the start mode selector in position 3 (CLEAR). Please note that the program card with the system program must be in its position.
   If the system does not start continue at step 6. If the system starts the fault is probably in the data base or the PC program. Continue at step 7.
6. Replace the processor module and the submodule carrier with program card interface and the program card, one at a time, until the controller starts in 3 (CLEAR) mode. Perform a cold start after each replacement that is depress the ENTER button with the start mode selector in position 3 (CLEAR).
7. Load in an available application program backup
8. Expand the system to full configuration.

5.5.10 User Repair

5.5.10.1 Board and Subrack Mounted Unit Exchange

General

In the following text, the word "board" also includes circuit board and rack mounted unit (applicable). An example of such a unit is a voltage regulator or backup power supply.

It is important to understand the consequences of a board exchange on-line and how it affects the current situation, for example:

- Replacement of an I/O board affects all channels on the board. It also sometimes indirectly affects the outputs via an application function, for example, a closed loop control.
- Replacement of a communication board type CI531 affects both channels on the board.

Before output boards (both analog and digital) are replaced, it is preferable to separate the different outputs from the process, that is, open terminal switches on the connection units (or take other adequate measures). In some applications, this is an absolute requirement for safety reasons.

The system software in Advant Controller 450 checks automatically that all I/O boards function correctly. In the event of board fault, and board exchange, the board and associated signals are marked as faulty in the data base. While the fault marking persists, the value (VALUE) is not updated in the data base.

The system software checks that the board is inserted and correct. If this is the case, the fault-diode extinguishes (after 10 s), the fault marking in the data base is reset and the board resumes its normal function.

Under the following headings, you can find general instructions for replacement of circuit boards and information on the handling of individual circuit boards.

Practical Execution

Replace faulty or suspect circuit boards and units as described below.

1. Do not forget to read Section 5.5.6, Safety Regulations.
2. Look under the heading **Additional Aspects of Individual Board Types**, below, for other useful information.
3. Special restrictions apply to the board type DSBC 174 or DSBC 176, bus repeater in the S100 I/O bus extension.

   CAUTION

   You cannot replace DSBC 174 or DSBC 176 with the voltage switched on, when used in single S100 I/O Bus Extension configuration.

4. If necessary, switch off the power supply to the Advant Controller. Then keep the start mode switch on the front of the processor module in the AUTO position.
5. Provide access to the board/unit by loosening the locking mechanisms:
   - The bar in front of the boards (I/O subrack).
   - The screws in the handles (controller subrack). **First disconnect all cables.**

6. Grip the board firmly and extract the board quickly and decisively (I/O subrack).
   Use both handles (controller subrack).
7. Check that the new board can replace the old:
   – Ensure that the eventual jumpering is the same as the old board.
     See Table 5-1 and Table 5-2.
   – Check for lowest revision approved variant to be used for the equipment and use replacement of the same or higher revision number.
8. Insert the new board carefully without reaching the rear plane contacts. Ensure that the board slides in the guides in the subrack or carrier board.
9. Push in the new board/unit quickly and decisively.
10. Store extracted boards in envelopes of conductive plastic.
11. Ensure that the board/unit contacts mate properly with the contacts in the rear plane.
    Screw the locking bar in place (I/O subrack).
    Fasten the screws in the handles (controller subrack).
12. Connect the cables (controller subrack).
13. Switch on the supply voltage if it is switched off. With the start mode selector in the AUTO position, the system is automatically initialized and restarted.
14. Boards which can be replaced during operations are initialized automatically by the system and the fault-indicating LED extinguishes automatically after approximately 10 s.
15. Perform a function test on the new board.

Additional Aspects of Individual Board Types

Table 5-1 lists controller hardware (applied in the controller subrack). For descriptions of these board types, see the individual referrals given in the table.

Table 5-2 lists S100 I/O bus extension and S100 I/O boards. They are described in *S100 I/O Hardware Reference Manual*.

Table 5-1. Replacement Aspects of Individual Board Types (Controller Hardware)

Board type - Jumpering		Comments
CI522A	No jumpering	- On-line replacement possible - Described in: *Advant Fieldbus 100*
CI531	No jumpering	- On-line replacement possible - Described in: Appendix A, Hardware Modules
CI532V01	No jumpering	On-line replacement possible - Described in: *RCOM Advant Controller 400 Series*
CI532V02	No jumpering	- On-line replacement possible - Described in: *MultiVendor Interface MODBUS with MS and CI532V02* *Advant Controller 400 Series*
CI532V03	No jumpering	- On-line replacement possible - Described in: *MultiVendor Interface Siemens 3964R* *Advant Controller 400 Series*
CI534V02	No jumpering	- On-line replacement possible - Described in: *MultiVendor Interface MODBUS with CI534V02* *Advant Controller 400 Series*
CI534V04	No jumpering	- On-line replacement possible - Described in: *MultiVendor Interface Allen-Bradley DF1* *Advant Controller 400 Series*
CI535	No jumpering	- On-line replacement possible - Described in: *MultiVendor Interface Development Environment*
CI538	No jumpering	- On-line replacement possible - Described in: *MultiVendor Interface Protocol Development Kit*

Table 5-1. Replacement Aspects of Individual Board Types (Controller Hardware) (Continued)

Board type - Jumpering		Comments
CI541V1	No jumpering	- On-line replacement possible **only together with the hole Carrier-card** - Described in: *PROFIBUS-DP* *Advant Controller 400 Series*
CI543	No switches are used in the GCOM application	- On-line replacement possible - Described in: *MasterNet User's Guide*
CI570	No jumpering	- On-line replacement possible - Described in: MasterFieldbus and S400 I/O
CI572 **CI573**	No jumpering 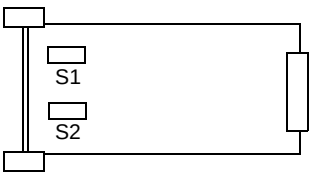	- On-line replacement possible - Described in: Advant Interface to LONWORKS User's Guide
CS513	Switches are used to: - Set node address - Select MB 300 or MB 300E - Select function "executed in main CPU" or "executed in slave CPU" 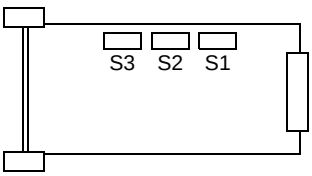	- On-line replacement possible - Described in: *MasterNet User's Guide*
MB510	No jumpering	- On-line replacement possible - Described in: Appendix A, Hardware Modules

Table 5-1. Replacement Aspects of Individual Board Types (Controller Hardware) (Continued)

Board type - Jumpering		Comments
PM511V08 **PM511V16** (PM511V on the front)	No jumpering	- This is the processor module of the controller. On line replacement of a single module is from a functional standpoint of course not possible. However the power supply need not be switched off. Replacement of a redundant processor module is described in Section 5.5.10.2, Replacement of Redundant Processor Module - Module described in: Appendix A
SB510	No jumpering	- On-line replacement possible, however, not during a mains supply interruption while the battery is used. See Section 5.5.10.6, Replacement of Backup Power Supply. - Described in: Appendix A, Hardware Modules
SB511	No jumpering	- On-line replacement possible, however, not during a mains supply interruption while the battery is used. See Section 5.5.10.6, Replacement of Backup Power Supply. - Described in: Appendix A, Hardware Modules
SB522	No jumpering	See Section 5.5.10.7, Battery Exchange Described in: Appendix A, Hardware Modules
SC510	No jumpering	- On-line replacement possible - Described in: Appendix A, Hardware Modules
SC520	No jumpering	- On-line replacement possible - Described in: Appendix A, Hardware Modules
SR511	No jumpering	- On-line replacement possible if a redundant unit is available - Described in: Appendix A, Hardware Modules
TC520	No jumpering	- On-line replacement possible - Described in: Appendix A, Hardware Modules

Table 5-1. Replacement Aspects of Individual Board Types (Controller Hardware) (Continued)

Board type - Jumpering		Comments
TC560V1	No jumpering	- On-line replacement possible however not practical. Reflect the consequences to all S100 I/O boards. The outputs will be forced to the safe position (0 V, open contact). You are recommended to switch off the mains supply during the replacement. The connection unit TK560 may be removed from the modem without interrupting the communication to other "nodes" on the near-side bus. For replacement of TC560 when S100 I/O bus redundancy is used, see Section 5.5.10.3, Replacement of Redundant S100 I/O Bus Extenders. - Described in: *S100 I/O Hardware*
TC561V1	No jumpering	- On-line replacement possible however, not practical. Reflect the consequences to all S100 I/O boards. The outputs will be forced to the safe position (0 V, open contact). You are recommended to switch off the mains supply during the replacement. For replacement of TC561 when S100 I/O bus redundancy is used, see Section 5.5.10.3, Replacement of Redundant S100 I/O Bus Extenders. - Described in: *S100 I/O Hardware*

Table 5-2. Replacement Aspects of Individual Board Types, S100 I/O

Board type - Jumpering	Comments
DSAI 130 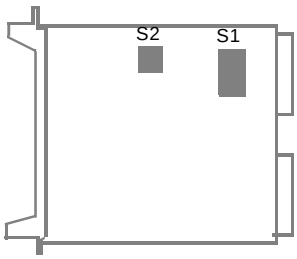	On-line replacement possible
DSAI 130A 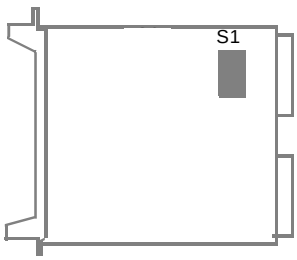	On-line replacement possible
DSAI 133 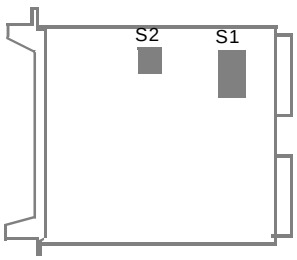	On-line replacement possible
DSAI 133A 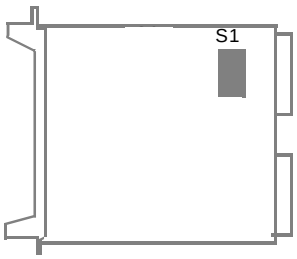	On-line replacement possible

Table 5-2. Replacement Aspects of Individual Board Types, S100 I/O (Continued)

Board type - Jumpering	Comments
DSAI 146 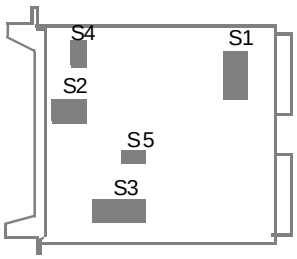	On-line replacement possible
DSAI 155A 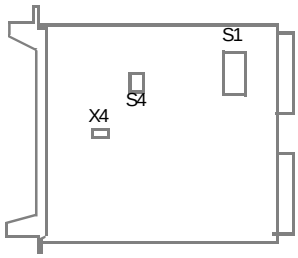	On-line replacement possible
DSAO 110 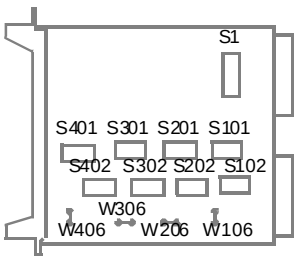	On-line replacement possible **Note!** In general, the electrical connections between output boards and the process is to be broken before the board is extracted. Alternative methods includes: - Open terminal switches on the connection unit - Disconnect cable which joins the board an the connection unit.
DSAO 120 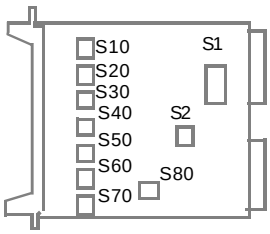	On-line replacement possible **Note!** In general, the electrical connections between output boards and the process is to be broken before the board is extracted. Alternative methods includes: - Open terminal switches on the connection unit - Disconnect cable which joins the board and the connection unit.

Table 5-2. Replacement Aspects of Individual Board Types, S100 I/O (Continued)

Board type - Jumpering	Comments
DSAO 120A 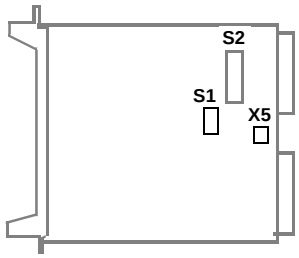	On-line replacement possible **Note!** In general, the electrical connections between output boards and the process is to be broken before the board is extracted. Alternative methods includes: - Open terminal switches on the connection unit - Disconnect cable which joins the board and the connection unit.
DSAO 130 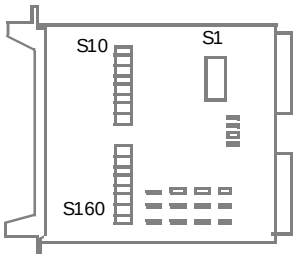	On-line replacement possible **Note!** In general, the electrical connections between output boards and the process is to be broken before the board is extracted. Alternative methods includes: - Open terminal switches on the connection unit - Disconnect cable which joins the board and the connection unit.
DSAO 130A 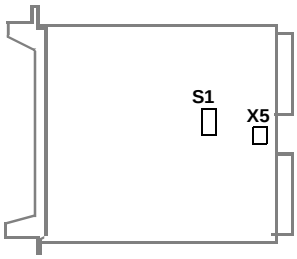	On-line replacement possible **Note!** In general, the electrical connections between output boards and the process is to be broken before the board is extracted. Alternative methods includes: - Open terminal switches on the connection unit - Disconnect cable which joins the board and the connection unit.
DSAX 110 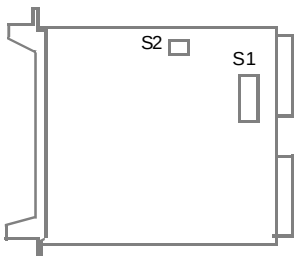	On-line replacement possible **Note!** In general, the electrical connections between output boards and the process is to be broken before the board is extracted. Alternative methods includes: - Open terminal switches on the connection unit - Disconnect cable which joins the board and the connection unit.

Table 5-2. Replacement Aspects of Individual Board Types, S100 I/O (Continued)

Board type - Jumpering	Comments
DSAX 110A 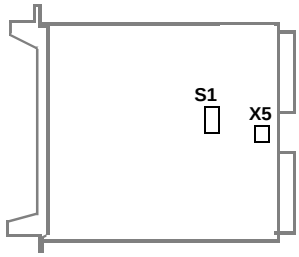	On-line replacement possible **Note!** In general, the electrical connections between output boards and the process is to be broken before the board is extracted. Alternative methods includes: - Open terminal switches on the connection unit - Disconnect cable which joins the board and the connection unit.
DSBC 174 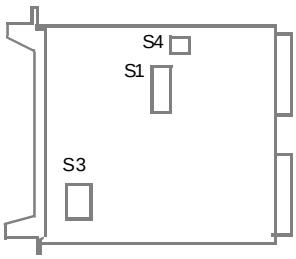 **DSBC 176** 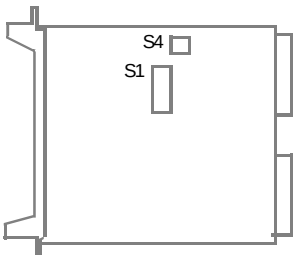	**CAUTION** On-line replacement **not** possible. Before a DSBC 174/DSBC 176 is replaced, the mains supply to the Advant Controller is to be switched off or the process disconnected or switched off externally. The supply may only be restored when the new DSBC 174/DSBC 176 is installed. Important process objects are then to be switched off externally or disconnected to avoid damage. When all of the red Fault LEDs on I/O boards are extinguished, the process may be reconnected and returned to operations in a controlled manner, preferably in stages with the inputs first and the most critical outputs last. **Note!** If the supply to a subrack is switched on before the DSBC 174/DSBC 176 is in place, the process outputs in the subrack can set themselves in optional states. For replacement of DSBC 174 when S100 I/O bus redundancy is used, see Section 5.5.10.3, Replacement of Redundant S100 I/O Bus Extenders.
DSDC 111 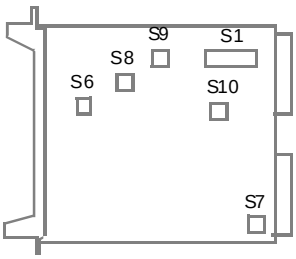	On-line replacement possible

Table 5-2. Replacement Aspects of Individual Board Types, S100 I/O (Continued)

Board type - Jumpering	Comments
DSDI 110A 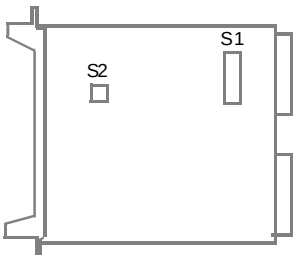	On-line replacement possible
DSDI 110AV1 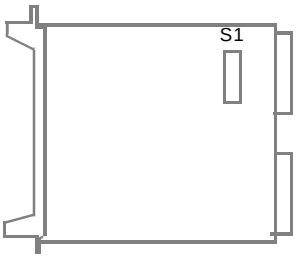	On-line replacement possible
DSDI 120A 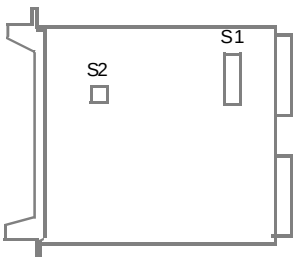	On-line replacement possible
DSDI 120AV1 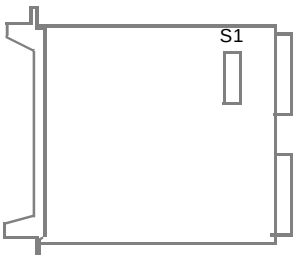	On-line replacement possible

Table 5-2. Replacement Aspects of Individual Board Types, S100 I/O (Continued)

Board type - Jumpering	Comments
DSDO 115 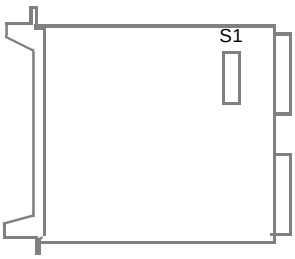	On-line replacement possible **Note!** In general, the electrical connections between output boards and the process is to be broken before the board is extracted. Alternative methods includes: - Open terminal switches on the connection unit - Disconnect cable which joins the board and the connection unit - Switch off relevant field power supply
DSDO 115A 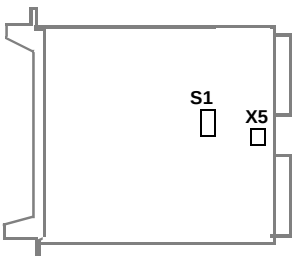	On-line replacement possible **Note!** In general, the electrical connections between output boards and the process is to be broken before the board is extracted. Alternative methods includes: - Open terminal switches on the connection unit - Disconnect cable which joins the board and the connection unit - Switch off relevant field power supply
DSDO 120A 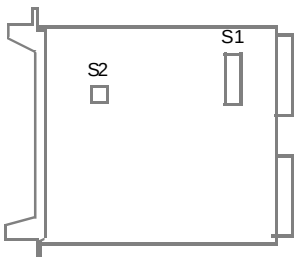	On-line replacement possible **Note!** In general, the electrical connections between output boards and the process is to be broken before the board is extracted. Alternative methods includes: - Open terminal switches on the connection unit - Disconnect cable which joins the board and the connection unit - Switch off relevant field power supply
DSDP 140A 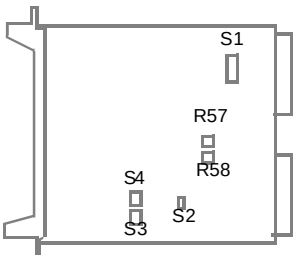	On-line replacement possible

Table 5-2. Replacement Aspects of Individual Board Types, S100 I/O (Continued)

Board type - Jumpering	Comments
DSDP 150 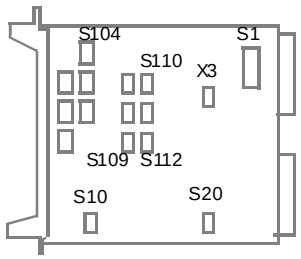	On-line replacement possible
DSDP 170 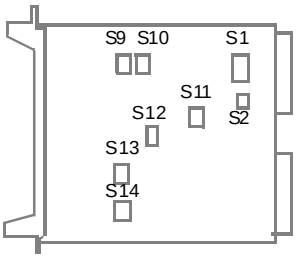	On-line replacement possible

5.5.10.2 Replacement of Redundant Processor Module

When a redundant processor module becomes faulty, the system loses its DUAL status and becomes single. DUAL LED's on both processor modules will be off.

In order to regain redundancy, replace the faulty unit as soon as possible in the following manner:

1. Do not forget to read Section 5.5.6, Safety Regulations.
2. Be careful, do not touch the primary module which may be in full operation.
3. Check that the correct program card is in position.
   The system software will be loaded into the replacement processor module from the program card.
4. Pull out the faulty module.
   Grip the module firmly and extract quickly and decisively. Use both handles.
5. Check it's revision number. The replacement module must have the same or higher revision number. The document *Release Notes i*ncluded in the Delivery Binder states which processor module can work in a redundant pair and which can not. For example, you can not mix 8 and 16 Mbyte versions.
6. Prepare the replacement module by putting it's start mode selector in position 2 (STOP).
7. Insert the new module carefully without reaching the rear plane contacts. Ensure that the module slides in the guides in the subrack.
8. Push in the new module quickly and decisively.
9. This new processor module now becomes the backup.
   The number display will show -3 (STOPPED).
10. Set the backup module's start mode selector to the same position as the primary module's.
11. Depress the ENTER button on the backup module.
12. The system will now be upgraded to DUAL. After some seconds the DUAL LED's on both processor modules will light up, and the backup module's number display will read b1.
13. Store the extracted module in an envelope of conductive plastic.

5.5.10.3 Replacement of Redundant S100 I/O Bus Extenders

This chapter describes how to replace a primary or backup DSBC 174 S100 I/O Bus Extender and a primary or backup optical modem TC560V1/TC561V1.

In order to regain redundancy, replace the faulty unit as soon as possible as described below.

In all cases, do not forget to read Section 5.4.6 Safety Regulations.

Replace a primary DSBC 174

1. Set the front switch, on the primary DSBC 174 that will be replaced, in position STOP.

   A processor changeover is executed and the processor, connected to the stopped DSBC 174 will stop with the code 80 presented in the front display. The RUN and DCOK LEDs are turned off, on the stopped DSBC 174.

2. Pull out the stopped bus extender.
   Grip the board firmly and extract quickly and decisively. Use both handles.

3. Check the strappings. The replacement board must be strapped in exactly the same way as the removed board.

4. Prepare the replacement board by setting it's front switch in position STOP. Bus Extenders must always be inserted with the front switch in position STOP.

5. Insert the new board carefully without reaching the rear plane contacts. Ensure that the board slides in the guides in the subrack.

6. Push in the new board quickly and decisively.

7. Set the front switch, on the new board, to position RUN. The RUN and DC OK LEDs are turned on.

8. Depress the ENTER button, on the stopped processor.

9. The processor will now start up as a backup.

10. Store the extracted board in an envelope of conductive plastic.

Replace a primary TC560V1/TC561V1

1. A primary optical modem should never be replaced. Stop the primary processor by setting the start mode selector in position 2 (STOP) and press ENTER. A processor changeover is executed and the processor connected to TC560V1/TC561V1 that will be replaced is stopped, -3 is presented on the front display. The optical modem is now working as backup.

2. Remove the power supply from the optical modem. All LEDs on the modem are turned off.

3. Remove the S100 I/O Bus connection cable.

4. Remove the optical fibres.

5. Replace the optical modem.

6. Connect the optical fibres.

7. Connect the S100 I/O Bus connection cable.

8. Connect the power supply to the optical modem. The LEDs P, TX and RX are turned on.

9. Start up the stopped processor module by setting the start mode selector in the same position as the primary processor's start mode selector have and press ENTER.

Replace a backup DSBC 174

1. Set the front switch, on the backup DSBC 174 that will be replaced, in position STOP.

   The RUN and DCOK LEDs are turned off, on the stopped DSBC 174.
2. Pull out the stopped bus extender.
   Grip the board firmly and extract quickly and decisively. Use both handles.
3. Check the strappings. The replacement board must be strapped in exactly the same way as the removed board.
4. Prepare the replacement board by setting it's front switch in position STOP. Bus Extenders must always be inserted with the front switch in position STOP.
5. Insert the new board carefully without reaching the rear plane contacts. Ensure that the board slides in the guides in the subrack.
6. Push in the new board quickly and decisively.
7. Set the front switch, on the new board, to position RUN. The RUN and DC OK LEDs are turned on.
8. Store the extracted board in an envelope of conductive plastic.

Replace a backup TC560V1/TC561V1

1. Remove the power supply from the optical modem. All LEDs on the modem are turned off
2. Remove the S100 I/O Bus connection cable.
3. Remove the optical fibres.
4. Replace the optical modem.
5. Connect the optical fibres.
6. Connect the S100 I/O Bus connection cable.
7. Connect the power supply to the optical modem. The LEDs P, TX and RX are turned on.

5.5.10.4 Replacement of Power Supply Unit

DANGER

Power supply units should be **replaced by authorized service personnel only**.
The branch A or B which is to be repaired must be carefully defined.

The replacement instruction focuses on the unregulated power supply units SA16x (a.c.) and SD150 (d.c.). However the principles are valid for power switch and distribution unit replacement as well.

Replacing a power supply unit shall always be carried out with highest safety possible. Basically this means that voltage supply should always be switched off during repair and installation work. Special provision is made for a system including redundancy where replacement is urgently needed in a live system.

Before replacing a primary power supply unit, break its mains switch S1 in the power switch unit (for the actual mains A or B). When the power supply unit is pluggable, unplug the power cord. Where the power supply installation is fixed also switch off a safety breaker or remove the actual fuse in the buildings mains installation before working in the power supply circuitry.

Off Line Replacement

1. Switch off the mains supply to the cabinet and wait until the capacitors have discharged. When the power supply system is loaded, the discharge takes 10 secs and when unloaded, 60 secs.
2. Gain access to the connectors on the voltage supply unit.
3. Disconnect actual connectors (plugs or terminals).
4. Unscrew the screws which fasten the unit and remove unit from the frame.
5. Install new unit in the reverse order.
   Reconnect all plug connectors (terminals).
6. Switch on the mains supply and test the unit function.
   LED LIVE on the 24 V distribution unit (SX554) should light. A volt meter connected to the test terminal on the distribution unit should read 19 V - 32 V.

On Line Replacement

1. Switch off **the actual mains supply branch** in the cabinet and wait until the capacitors in the power supply units have discharged. When the power supply system is loaded, the discharge takes 10 secs and when unloaded, 60 secs. Use the switch S1 on the **actual power switch unit**.
2. Gain access to the connectors on the voltage supply unit.
3. Check with a volt meter that the voltage supply unit is "dead" on both the primary and secondary sides. Any faulty voting diode can give a secondary "back" voltage.
4. Disconnect actual connectors (plugs or terminals).
5. Unscrew the screws which keep the unit in place and remove unit from the frame.
6. Install the new unit in the reverse order.
   Reconnect all plug connectors (terminals).
7. Switch on the mains supply and test for the unit function.
   LED LIVE on the 24 V distribution unit (SX554) should light. A volt meter connected to the test terminal on the distribution unit should read 19 V - 32 V.

5.5.10.5 Replacement of 5 V Regulator

Different regulators are used for the different applications:

- Controller subrack. Unit accessible from the front side.
  - Single regulator, SR511
  - Redundant regulators, 2 x SR511
- I/O subrack. Unit accessible from the rear side.
  - Single regulator, DSSR 122
  - Redundant regulators, 3 x DSSR 170.

Single SR511

1. Switch off the mains supply.
   Use the power switch S1 on the power switch unit.
2. Provide access to the unit by loosening the screws in the handles.
3. Grip the SR511 firmly and extract it decisively.
   Use both handles.
4. Check that the new unit can replace the old:
   – Check for lowest revision approved variant to be used for the equipment and use replacement of the same or higher revision number.
5. Insert the new unit carefully without reaching the rear plane contacts.
   Ensure that the unit slides in the guides in the subrack and mates properly with the contacts in the rear plane.
6. Push the new unit in place by the handles.
7. Fasten the screws in the handles.
8. Switch on the mains supply voltage. With the processor module start mode selector in position 1 (AUTO) the system will be automatically initialized and restarted.
9. Check the regulator LED indications. F should be OFF while 2 V and 5 V should be ON.
10. Store extracted unit in envelope of conductive plastic.

Redundant SR511

1. The replacement is made on line. That is with the mains supply on. The controller operation will not be disturbed.
2. Provide access to the unit by loosening the screws in the handles.
3. Grip **the faulty unit** firmly and extract it decisively.
   Use both handles.
4. Check that the new unit can replace the old:
   – Check for lowest revision approved variant to be used for the equipment and use replacement of the same or higher revision number.
5. Insert the new unit carefully without reaching the rear plane contacts.
   Ensure that the unit slides in the guides in the subrack and mates properly with the contacts in the rear plane.
6. Insert the SR511 slowly until it starts up (the green indicating LEDs / but not the red one / on the SR511 front panel are lit), then push the SR511 fully into place.
7. Fasten the screws in the handles.
8. Check the regulator LED indications. F should be OFF while 2 V and 5 V should be ON.
9. Store extracted unit in envelope of conductive plastic.

DSSR 122

1. Switch off the mains supply.
   Use the power switch S1 on the power switch unit.
2. Open the hinged frame to gain access to the unit and the connection terminals on the rear side of the I/O subrack.
3. Disconnect the 24 V supply lead at the screw terminal.
4. Loosen the 5 V screw on the subrack 5 V terminal bar.
5. Loosen the 0 V screw on the subrack 0 V terminal bar.
6. Unscrew the screws which hold the regulator unit and remove it from the rack, lifting the regulator upwards thus disengaging it from the 5 V, 0 V terminals.
7. Check that the new unit can replace the old:
   – Check for lowest revision approved variant to be used for the equipment and use replacement of the same or higher revision number.
8. Install new unit in the reverse order.
9. Switch on the mains supply voltage. With the processor module start mode selector in position 1 (AUTO) the system will be automatically initialized and restarted.
10. Check 5 V (5.0 V - 5.25 V) on the test terminals using a volt meter.

DSSR 170

1. The replacement is made on line. That is with the mains supply on. The controller operation will not be disturbed.
2. Open the hinged frame to gain access to the unit on the rear side of the I/O subrack.
3. Unscrew the two fixing screws and remove the regulator.
4. Check that the new unit can replace the old:
   – Check for lowest revision approved variant to be used for the equipment and use replacement of the same or higher revision number.
5. Install the new regulator. Tighten the fixing screws firmly.
6. Check the LED indications. F should be OFF while LIVE should be ON.
7. Store extracted unit in envelope of conductive plastic.

Notes on DSSR 170:

- When replacing a voltage regulator, the substitute is to be placed in the same position as the regulator to be exchanged.
- The upper fixing screw must be tightened to enable the 24 V/5 V conversion. If there is any contact problem, adjust the position of the nut at the contact spring in the regulator.
- The fuse in the regulator is readily accessible at the rear of regulator printed circuit board when the regulator has been removed from the rack.
- The correct function of a regulator can be checked only by individual testing of the regulator. (In a separate test rig or by removing redundant regulators one at a time).

5.5.10.6 Replacement of Backup Power Supply

You can replace Backup Power Supply SB510 and SB511 on-line, but not during a mains supply interruption while the battery is used.

Some system functionality provided by the backup power supply is essential to a safe controller operation. This claim for a very short replacement time. Lost functions during the absence of backup power supply are:

- Backup supply voltage of RAM.
- Power fail detection which ensure a safe controller shut down in the event of mains supply interruption.
- Supervision of the 24 V supply A/B for the controller subrack.
  System messages is sent and spurious alarm indications is obtained in the node system status display.

1. The replacement is made on line. That is with the mains supply on. The controller operation is not disturbed.
2. Disconnect the supply connector on module front.
3. Grip the unit firmly and extract it quickly and decisively.
   Use both handles.
4. Check that the new unit can replace the old:
   – Check for lowest revision approved variant to be used for the equipment and use replacement of the same or higher revision number.
5. Insert the new unit carefully without reaching the rear plane contacts.
   Ensure that the unit slides in the guides in the subrack.
6. Push in the new unit quickly and decisively.
7. Ensure that the unit contacts mate properly with the contacts in the rear plane.
   Fasten the screws in the handles.
8. Connect the power supply on module front.
9. Check the LED indications. F, BF should be OFF while IP should be ON.
   The LED FC (Fast Charging) is ON.
10. Store extracted unit in envelope of conductive plastic.

5.5.10.7 Battery Exchange

The battery should be replaced at any fault indicated by the backup power supply diagnostics and regularly (see Section 5.2.6, Backup Batteries).

1. The replacement of the Battery Unit SB522 is made on line. That is with the mains supply on. The controller operation is not disturbed.
2. Disconnect the pluggable connector.
3. Unscrew the two fixing screws and remove the battery.
4. Install the new unit in the reverse order. Tighten the fixing screws firmly.

During the time of replacement the backup power supply will indicate F (Fail) and BF (Battery Fail). This is observed in the system status display in the operator station too.
Possibly will, at low battery temperature, the red F LED on the backup power supply still be ON under a few minutes after replacement.

NOTE

The battery includes cadmium and shall be treated as **hazardous waste**.

5.5.10.8 Replacement of Connection Unit

General

It is important to understand the consequences of a connection unit exchange on-line and how it affects the current situation, for example:

Replacement of a connection unit affects all channels on the corresponding I/O board.
It also sometimes indirectly affects the outputs via some application function, for example a closed loop control.

Practical Execution

Replace faulty or suspect connection units as described below.

1. See that process connections (signals and power supply) are disconnected before starting the replacement work.
   Determine where it is easiest to disconnect on a case-by-case basis because of the differences in different applications. In some cases, you can disconnect the signals/power supply at a cross-coupling, in other cases, at process transducers and at the location where the power supply is distributed.
2. Disconnect the internal cable which joins the connection unit and corresponding circuit board.
3. Label the leads so that they can be connected to the new unit correctly.
4. Disconnect the leads. Unscrew the fixing screws. Remove.
5. Install the new unit in the reverse order. Ensure that the screws make contact with the tinned surface of the earth plane of the circuit board for effective grounding.
6. Test the function.

5.5.10.9 Replacement of Modem

Replacing a modem of course will affect the actual communication link. If no physical redundancy, the communication will be shut down. However a replacement can be made while the controller is operating otherwise. The power supply to the modem must be disconnected locally.

Replace a faulty or suspect modem located in a modem subrack (RF 540/541) in the following way:

1. Disconnect the power supply with the pluggable connection
2. Disconnect all other pluggable connections
3. Unscrew the fixing screws - Remove
4. Install the new unit in the reverse order
5. Test the function.

5.5.11 Adjustment of Analog Input and Output Boards

On delivery, the analog input boards are normally adjusted for voltage signals, for the current output, analog outputs are normally adjusted with the ambient temperature 25°C and need normally no adjustment.

Some of the boards can be adjusted, see Table 5-3.

General instructions are provided in the adjustment instructions below. The detailed information for individual circuit boards, for example, location of test terminals, location of potentiometers, jumpering, function descriptions, and so on is provided in the manual *S100 I/O Hardware*.

If the potentiometers are not accessible on the front, place the board on an extension board DSFB 110. On the units which can be adjusted channel by channel, adjust the channels before the A/D converter.

The following aids are required for the adjustments.

- A reference voltage supply unit, with adjustable output within the range 0 - 10.5 V and with resolution 0.1 mV. The supply unit is not to have mains noise or hum in excess of 0.1 mV. If no supply unit is available, you can use a battery, a potentiometer and a digital voltmeter with corresponding resolution.
- An adjustable voltage supply unit with rating 100 V.
- A digital voltmeter for the range 0 - 10.5 V with 0.1 mV resolution, accuracy exceeding that required for the board by a wide margin.
- An oscilloscope for checking mains noise and hum.
- Precision resistors:
  - One of 500 ohm, 0.01%
  - One of 300 ohm, 0.01%
  - One of 100 ohm, 0.01%.
- An Advant Station 100 Series Engineering Station or
  Advant Station 500 Series Engineering Station.
- An extension board DSFB 110
- (A miniature soldering iron).

Adjustment Possibilities on Circuit Boards

Table 5-3 shows the adjustments possible on the various analog input and output boards.

Table 5-3. Adjustment Possibilities on Analog Circuit Boards

Type	Channel adjustment	Common adjustment	Req. of DSFB 110 (1)
DSAI 110	--	Z,G	--
DSAI 130	Z, B, G	Z, G, S (2)	Yes
DSAI 130A	The module is calibrated at production		
DSAI 133	--	G, Automatic adjustment (3)	Yes
DSAI 133A	The module is calibrated at production		
DSAI 146	--	G	--
DSAI 155A	Automatic adjustment	Automatic adjustment	--
DSAX 110	--	G, Automatic adjustment (3)	Yes
DSAO 110	Z, G, V, L1, L2	--	Yes
DSAO 120	Z, G	--	--
DSAO 120A	The module is calibrated at production		
DSAO 130	G	--	Yes
DSAO 130A	The module is calibrated at production		
DSAX 110A	The module is calibrated at production		
DSTY 101	Z, G	--	--

(1) If a potentiometer is not accessible from the front, place the board on an extension board DSFB 110.
(2) Symmetry (S), which is adjusted in a test during manufacture, has the same effect as Gain (G), but only on positive values.
(3) DSAI 133 and DSAX 110 have automatically adjusted zero and automatically adjusted Gain caused by an onboard adjustable voltage reference.

Key to the signs:

Z - Zero, G - Gain, B - Balance, S - Symmetry, V - Variable gain, L1/L2 - Limits

5.5.11.1 Channel Adjustment on DSAI 130

Channel adjustment consists of the following operations:

- Zero-point adjustment Z
- CMRR-balancing (Common Mode Rejection Ratio) B (= suppression of CMV). Adjustment is normally not necessary except in exchange of components in this circuit.
- Full scale adjustment G.

Perform the adjustments in the order in which they are described (Z, B, G). If a certain adjustment function is not available, the procedure is continued by setting the next parameter. Potentiometers for adjusting the common section (A/D) are located on the lower part of the front. The input voltage is measured at the test terminal X3. Make connections as shown in Figure 5-21. Disconnect the process signal at the connection unit before the connections are made.

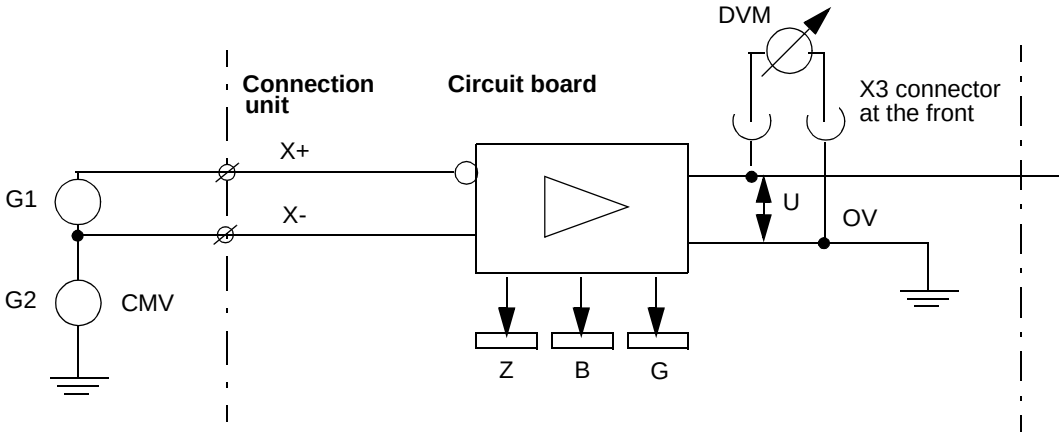

Figure 5-21. Connections for Channel by Channel Adjustment of DSAI 130

Adjustment of Zero Points, Channel by Channel

The zero points are adjusted, channel by channel, with G1=0.000 V, connected between the input terminals X+ and X-, on the connection unit and with G2=0:
Adjust the signal U to 0.000 V with the channel potentiometer Z.

CMRR Adjustment, Channel by Channel

With G1 short-circuited and G2=+100 V: Adjust the signal U to 0.000 V with the channel potentiometer B. With the same connections, change G2 to -100 V and check that the signal U=0.000 V.

Full Scale Adjustment, Channel by Channel

With G1=Full scale value (FS; usually +10000 mV for voltage input and 20.000 mA over 250 ohm shunt resistor for current input), connected between the input terminals X+ and X- on the connection unit, and with G2=0. Adjust the output signal U with the channel potentiometer G to +10000 mV for voltage signal and +5000 mV for current signal.
Change, with the same connections G1 to -10000 mV (-20.000 mA) and check that the output signal =-10000 mV (-5000 mV).

5.5.11.2 Adjustment of A/D Converter

Adjustment for Boards DSAI 130, DSAI 133 and DSAX 110

The A/D converter is adjusted in three operations:

- Adjustment of zero point Z (automatically adjusted on DSAI 133)
- Adjustment of full scale value G
- Adjustment of symmetry S (only DSAI 130, normally unnecessary).

The adjustments are performed in the same order as given here (zero point, full scale value and symmetry, if relevant).

Adjust AI units which are intended for voltage or current signals with the help of a voltage reference. If all inputs are jumpered for current, and none are unused so that the solder jumper can be clipped, you can use a voltage reference which can give at least 20.5 mA for a channel jumpered for a current shunt.
In this case, set CONV_PAR on the data base element to -20..20 mA, 0..20 mA or -5..5 V, and half the reference voltage is used instead of the values specified below as an internal gain multiplied by 2 is used.

An input and corresponding data base element are selected for the adjustment. If an unused input is selected, ensure that ACT is set to 1 and afterward reset to 0. Select a signal with CONV_PAR=-10..10 V (exception in accordance with the above) or change CONV_PAR in the data base element concerned.

Make the updating continuous by setting DEADB=-1 and FILTER_P=0 (note previous values so that they can be reset after the adjustment).

The reference voltage for the adjustment is connected to the connection unit and the measured value is read with an engineering station.
The potentiometers Z,G and S are located in the lower half of the front of the board.

Adjustment of the Zero Point on the A/D Converter

Adjust the reference voltage to the corresponding, a half step for the A/D converter:

DSAI 130	12 bits	1/2 bit = 1.25 mV
DSAI 133, DSAX 110	12 bits	Automatic adjustment of zero.

Adjust the potentiometer Z on the board front, reading the unscaled value in the data base at the same time.

Use the command GETAB on the engineering station to read the unscaled value continuously:

GETAB

IV= AIX.Y:16 Insert value, AI= Analog Input, X = board number, Y = signal number (16 is the property number of the unscaled value).

GVD (Get Value Dynamically)

Example:

IV=AI1.1:16
will show unscaled value of first input of first board.

The zero point is correctly adjusted when the value varies between zero and a value corresponding to an increment for the A/D converter, 128 for DSAI 110 and 8 for DSAI 130.

Adjustment of the Full-scale Value on the A/D Converter

Perform the adjustment with negative voltage. If negative signals are not used, use a positive reference voltage. Adjust the reference voltage connected to the negative (or positive) input to the full-scale value 10 000 mV.

Adjust the potentiometer G while reading the value. The full-scale value (gain) is correctly adjusted when the unscaled positive value is 32 000 ±8 (negative value 64 768 ±8) for 12-bit boards and 32 000 ±128 (negative value 64 768 ±128) for 8-bit boards.

The Gain is automatically adjusted on DSAI 133 and DSAX 110 with help of an onboard voltage reference. However, this voltage reference may be adjusted if necessary with a potentiometer, R9 on DSAI 133 and R14 on DSAX 110, in the same manner as above.

Adjustment of Symmetry (DSAI 130)

If the full-scale value (gain) is adjusted for negative voltage, you can adjust or check the symmetry with the help of positive reference voltage. This is performed in the same way as for full-scale adjustment but with positive voltage and with the potentiometer S.

Resetting - to Stop the GETAB-command

<SHIFT--BREAK> (to conclude the updating)

DV

END.

Adjustment for Boards DSAI 145/146 and DSAI 151

It is easiest to perform the adjustment of the Pt100 temperature board with accurate resistors as references.

Select an input and corresponding data base element for the adjustment. If you select an unused input, ensure that ACT is set to 1 and afterward reset to 0.

Select a signal with CONV_PAR=640°C or change CONV_PAR in the data base element selected. Make the updating continuous by setting DEADB=-1 or 0 and FILTER_P = 0 (note previous values so that they can be reinstated after the adjustment).

Connect a 100 ohm resistor ±0.01% (0°C for Pt 100 transducer) to the selected input on the connection unit.

Jumper all inputs not used.

Zero Point Adjustment

The Z potentiometer need not be field-adjusted since the software handling of DSAI 145/146 and DSAI 151 has automatic zero adjustment (which offsets any adjustment within 10 seconds). If the Z potentiometer is not adjusted correctly, it is sufficient to set it to the middle of its range. If, however, you find a setting where the Fault LED is lit (reference channel error), turn the potentiometer away from this setting.

Adjustment of Full-Scale Value

Connect a 300 ohm resistor ±0.01% (which corresponds to 558°C for a Pt100 transducer).

Adjust the potentiometer G on the board front at the same time as the value in the data base is read as it was previously. The full-scale value is adjusted correctly when the VALUE is 558°C.

(Read VALUE continuously using the subcommand GVD.)

Resetting

Stop the GETAB command as described in the preceding chapter.
Reset the values for CONV_PAR, FILTER_P and DEADB.
Connect the process input or the jumper in the same way as the reference resistor is connected.

5.5.12 Channel Adjustment on AO Board

All analog output boards are adjusted during manufacture for current output, which means that units in which the voltage output is used may be readjusted to obtain the full accuracy. The same applies to spares. The following channel setting can be of interest:

- Adjustment of the zero point Z
- Adjustment of gain G
- Adjustment of the variable gain V
- Setting of the limits L1, L2.

It is not certain that all circuit boards encountered in this connection have all of these adjustment possibilities. Before the adjustment, jumper the circuit board for the mode (voltage, current) in which it is to be used. The connection required is shown in Figure 5-22 and Figure 5-23.

Execute the adjustments in the order in which they are described (Z, G, V, L1, L2).

The output signal is measured on the connection unit after the load is replaced with the instrument in accordance with Figure 5-22 and Figure 5-23.

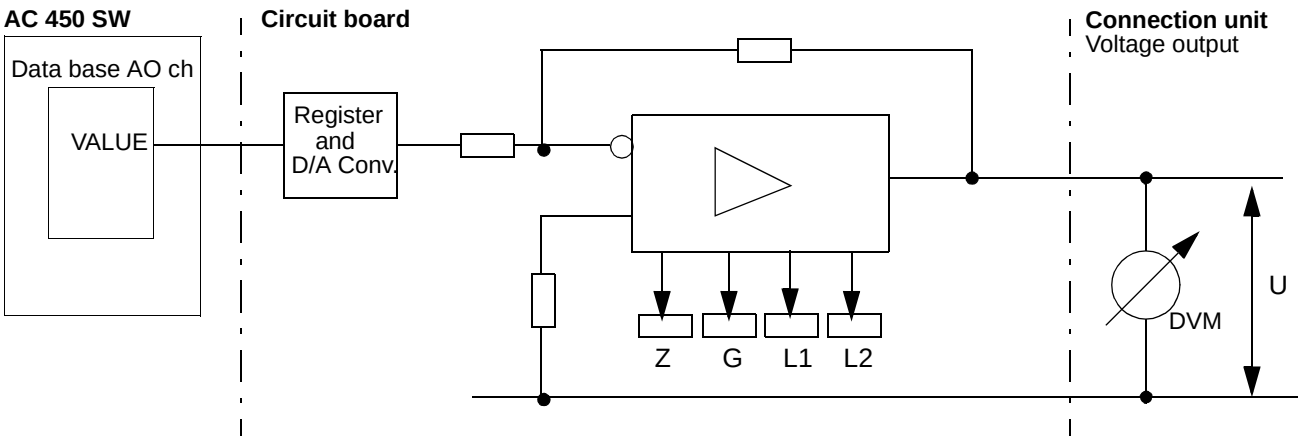

Figure 5-22. Adjustment of Voltage Output

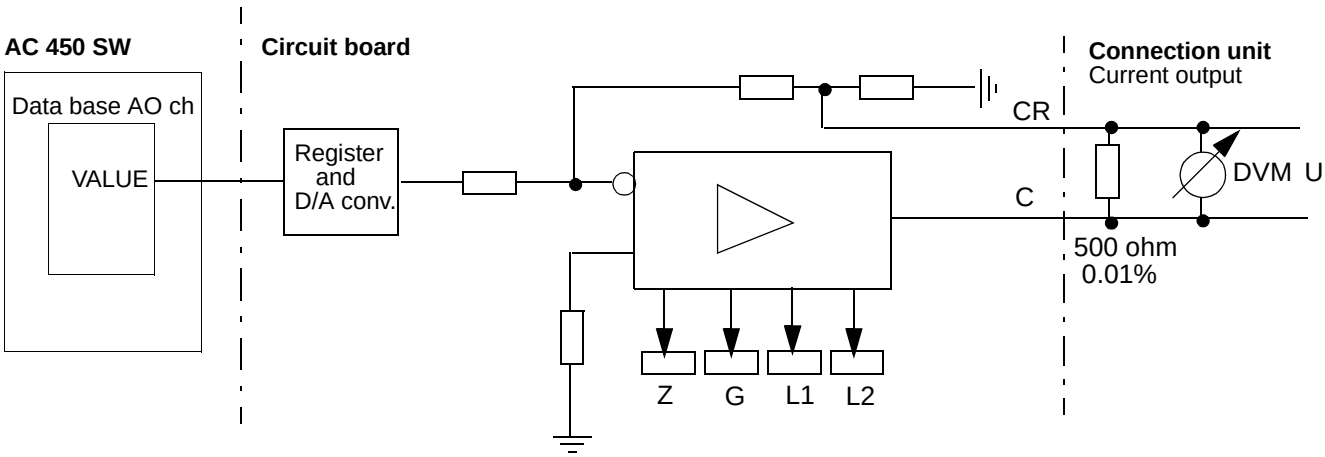

Figure 5-23. Adjustment of Current Output

5.5.12.1 Adjustment of Zero Point, Channel by Channel

Enter the value zero in VALUE (property 10) in the AO channel data base element to be adjusted.

Use an engineering station.

Use the command MDB to modify the AO channel, for example:

MDB AO1.X <CR>
?
M10 <CR> (Modify property 10)

VALUE: 3.87 New value: **0** <CR>

End

X = channel number. The text underlined is presented by the engineering station.

Measure the voltage over the channel output on the connection unit and adjust the zero point with the potentiometer Z until the instrument shows 0.000V.

5.5.12.2 Adjustment of the Gain, Channel by Channel

Enter a value with RANGEMAX (property 45) in VALUE (property 10).

Use an engineering station.

Use the command MDB, read RANGEMAX and modify VALUE to RANGEMAX, for example:

MDB AO1.X <CR>
?
M10 <CR> (Modify property 10)

VALUE: 2.19 New value: "**RANGE MAX**" <CR>

End

X = channel number. The text underlined is presented by the engineering station.

Adjust the gain with the potentiometer G until the instrument shows FS (Full scale).

All 8 outputs on DSAX 110 will be adjusted to full scale with the potentiometer R8 (output voltage reference X3:3-4).

Table 5-4. Full Scale Voltages

Number of Bits	FS "U" U mV	FS 10 mA U mV (500 ohm)	FS 20 mA U mV (500 ohm)
8 bit	10 000	5 000	10 000
10 bit			
12 bit			

5.5.12.3 Adjustment of Variable Gain, Channel by Channel

The variable gain is intended for special applications in which it is necessary for some reason to adjust a signal within the complete range 0 - 100%.
Use the potentiometer V for the adjustment. If the variable gain is not used, screw out the potentiometer completely so that it does not affect the measurement circuit.

5.5.12.4 Adjustment of "Limit Low" L1 and "Limit High" L2, Channel by Channel

Limit the signal with the potentiometers L1 and L2 to optional values between -100% and +100%.

If the limiting function is not used, its potentiometers must be screwed out completely to + and -.

5.5.13 Adjustment of Isolation Amplifier

The isolation amplifier DSTY 101 is adjusted in the same way as analog input boards, that is, for zero point (Z) and full scale (G).

If a live zero (4 mA) is used, a basic value is jumpered in accordance with the unit description. The output signal is then adjusted to 2.000 V with the input signal 0.000 mV (4 mA, 500 ohm ±0,01%).

5.5.14 Adjustment of Reference Voltage.

DSAI 133 and DSAX 110 have accurate internal reference voltage for self-calibration. You can check this reference voltage and adjust as necessary with an accurate voltmeter as follows.

Measure at the test terminal X3 between pins 1 and 2 where 2 is to be at +10 V. The extension board DSFB 110 is used for adjustment (trim potentiometer R9 for DSAI 133 and R14 for DSAX 110 inputs and R8 for outputs at X3:3-4).
As an alternative, the board is moved to an accessible part of the I/O subrack.

5.5.15 System Restart following Maintenance Activities

Maintenance carried out On-line

If fault finding and module replacement has been made on-line the new module and its system function will be automatically initialized and restarted within a few seconds.

Maintenance carried out Off-line

It is assumed that the controller has been manually stopped by the start mode selector set in position 2 (STOP) (followed by depressing of the ENTER button).

To get into the OPERATION mode perform as follows:

1. Reflect the consequences to the process by a restart of the controller.
2. Set the start mode selector on the processor module in position 1 (AUTO).
3. Depress the ENTER button.
4. The controller will be in OPERATION mode within a few minutes. This is indicated by P1 on the processor module character display. If any start program in the application program, the controller operation will restart accordingly.

Mains Supply has been Disconnected

It is assumed that the RAM backup has been available during the time of power supply disconnection. To get into the OPERATION mode perform as follows:

1. Reflect the consequences to the process by a restart of the controller.
2. Check that the start mode selector on the processor module front is set in position 1 (AUTO).

3. Check LED BC on the processor module. It should light indicating backup voltage for RAM connected.
4. Switch on the mains supply.
5. The controller will be in OPERATION mode within a few minutes. This is indicated by P1 on the processor module character display. If any start program in the application program, the controller operation will restart accordingly.

Cold Start

If for some reason the RAM content has been erased, or if severe software disturbances are indicated, restoring of the system configuration and the application program is required.

A suitable backup must be available. The way of performing a loading of a backup depends on the type of backup. See example and further information in Section 5.5.17, Loading of Application Program.

5.5.16 System Restart, INIT

If the controller has stopped due to a software error it is always possible and most often desirable to try a restart.

A processor module which has stopped indicate HLT and a certain halt code. This information and, if any, system messages available in the computer disappears after a restart (or after they have been read by any engineering tool!

1. Make a note of the halt code indicated on the processor module character display
2. If an engineering station is available and you have the time and knowledge proceed as follow:
   a. Set the mode selector on the processor module in position 4 (OFFLINE). Depress the ENTER button.
   b. Connect the engineering tool to the processor module in off-line symbolic mode. A printer should be connected to the tool.
   c. Use the commands LSYSHI (List SYStem HIstory), LSYSM ALL (List SYStem Messages ALL), LTSL (List Task Switch Log) and list all messages.
   d. The information from the listing is used in the continued contact with ABB.
   e. Set the mode selector back to position 1 (AUTO).
3. Depress the ENTER button
4. If the initialization is successful, the controller will be in OPERATION mode within a few minutes. This is indicated by P1 on the processor module character display.
5. If HALT again, other measures must be taken, see Section 5.5.17, Loading of Application Program.

Additional Information for Redundant Processor Modules

A controller with redundant processor modules should be treated as a single system. Make the following additional steps. The one processor module which is primary/backup is denoted primary/backup all through.

1. Stop the backup module
   a. Set the start mode selector on the backup module in position 2 (STOP).
   b. Depress the ENTER button on the backup module.
2. Follow the general instructions above for a single system.
3. By way of conclusion start the backup module.
   a. Set the start mode selector on the backup module in the same position as the primary
   b. Depress the ENTER button on the backup module.

5.5.17 Loading of Application Program

Several methods of how to dump an application program and how to load the actual backup into a controller are available. The possibilities and general descriptions can be found in a separate reference manual *AMPL Configuration Advant Controller 400 Series*.
Knowledge in handling an engineering tool is necessary to apply general descriptions.

The maintenance organization of the plant is responsible for well developed and adapted routines in this area.

Below **one possible scenario** is described to get an overview of the loading. You may see the instruction directed to "the not so experienced maintenance personnel" which has to take care of a program load in an emergency situation. The controller has stopped (the processor module indicate HALT) and a simple system restart (see above section) has failed.
Of course the instructions are only valid under certain circumstances.
Important assumptions are:

- An DUAP application program dump is available on the engineering station hard disk
- The dump is performed in OPERATION mode. If not you must, after loading, make a manual deblocking of each individual PC program. This simplified instruction does not support that alternative.
- After the loading the controller will automatically get into OPERATION mode. Always reflect the consequences to the process.

DANGER

Reflect the personnel and machine safety, see Section 5.5.6, Safety Regulations.

- The identity of the dump and the net and node number of the controller must be known. In the example of procedure below the name ABCD and net 11, node 12 are used. Please observe that the dump usually consists of different segments designated for example: ABCD0001.AD, ABCD0002.AD and so on.

Example of Procedure

Action		Response
1.	Set the start mode selector on the Processor Module PM511 front in 3 (CLEAR)	
2.	Check that the program card is in position. The system software will be reloaded at the cold start.	
3.	Depress the ENTER button	The controller system configuration and the application program are erased. The processor module will indicate P2 after about a minute.
4.	Set the start mode selector in 1 (AUTO) Do **not** press the ENTER button!	
5.	Connect the communication cable between the engineering station and the Processor Module PM511, port X10.	
6.	Switch on the power supply to the engineering station	Successful Advant Station 100 Series ES boot Windows start up.
7.	If necessary start Application Builder in AdvaBuild window to select project and node.	Appropriate node found.
8.	Start On-line Builder from within the Application Builder or in AdvaBuild window.	Booting engineering board Press <Ctrl>, <Break>
9.	Press <Ctrl>, <Break> to activate the engineering tool.	
10.	Select 1 (Advant Controller 400) <CR>	
11.	Select 1 (Advant Controller 400 programming) <CR>	
12.	In the node Setup window confirm or select the correct Target System.	Contact with target. Identity presented.
13.	Type LDIR SRCE:*.AD<CR>to check that your DUAP dump is available.	In the example the following ABCD0001.AD ABCD0002.AD etc. are listed.
14.	Type LOAP <dump name>, SRCE <CR> For example LOAP ABCD, SRCE<CR>	The loading proceed. #
15.	DICONFIG <CR>	OK TO START UP THE TARGET, Y/N
16.	Type Y <CR>	After about one minute: THE TARGET SYSTEM IS NOW IN OPERATION MODE

The processor module will now indicate P1 (OPERATION mode) on the character display.

Additional Information for Redundant Processor Modules

A controller with redundant processor modules should be treated as a single system. Make the following additional steps. The one processor module which is primary/backup is denoted primary/backup all through.

1. Stop the backup module
   a. Set the start mode selector on the backup module in position 2 (STOP)
   b. Depress the ENTER button on the backup module
2. Follow the general instructions above for a single system
3. By way of conclusion start the backup module
   a. Set the start mode selector on the backup module in the same position as the primary
   b. Depress the ENTER button on the backup module

5.6 CPU Load Measurement

When the Advant Controller 450 is executing the PC programs, the CPU load depends mainly on the size and nature of the PC programs and, above all, on the cycle times chosen for the various execution units.

Use the ANPER (ANalyze PERformance) command to investigate the actual load. Using its indications of the system load as a basis, you can adjust, for example, the chosen cycle times and thereby optimize the use of the available performance.

The ANPER command is made up of a number of options. The first choice is between analysis of the load of the entire Advant Controller (system load) or the load per system part (task load).

Please refer to the separate reference manual *AMPL Configuration Advant Controller 400 Series* for further information of the different commands and their possibilities.

5.7 Backup

5.7.1 Backup of System

After important changes in the application program a backup copy of the data base content and the PC program should be made. Different methods using different dump/load commands exist. A survey of the available facilities are given in Section 2.4.2.6 Dumping and Loading. Otherwise you are referred to the separate reference manual *AMPL Configuration Advant Controller 400 Series w*hich describe the practical work.

5.7.2 Backup of Application

If you want to store your application in a flash card (PCMCIA) on the Advant Controller 400 Series, you can use an Advant Station 130 Engineering Station which provide the following:

- AdvaBuild On-line Builder
- A flash card interface and corresponding software, CardTalk.

AdvaBuild On-line Builder supports the preparation of flash cards with application dumps, DUAP. The AdvaBuild On-line Builder User's Guide describes the different working procedures in detail. Following is an overview.

Considerations

- The system program backup and the application program backup can not be mixed in one single flash card.
- Flash cards are available in three memory sizes (currently), 2 Mbytes, 4 Mbytes and 10 Mbytes. Select a type that takes the actual application program.
- The flash card for application backup must first be formatted using the AdvaBuild On-line Builder.
- The application program dump (DUAP) to be used should be taken while the controller is in the operation mode (P1). This will ensure that no manual intervention is needed to get into full operation after a shut down and an automatic restart.

Step-by-step Instruction

1. An application program dump (DUAP) for the actual controller is assumed to be available in the engineering station.
2. Insert a suitable flash card in the desired PCMCIA slot of the engineering station. (Two slot available.)
3. Select the On-line Builder menu for Flash Card | Write.
4. Select the desired DUAP.
5. Pushing the Enter button will start the creation of the backup flash card which is now denoted an application program card.
6. Move the application program card to the Program Card Interface MB510 of the controller.
   The program card can be inserted on-line:
   No configuration work needed.
   The green LED on MB510 front will light.
   A new item representing the added program card will be created automatically in the system status display on the operator station.

   Regarding appropriate hardware and software see Section 3.1.2.4, Backup of Application Program.
7. The application program card is now ready for operation. However you are advised to make a functional test of the backup in a non-critical situation. I.e. perform a cold start of the controller when a possible shut down is accepted from a process control viewpoint. Any checksum error of the original DUAP file will be detected in connection to the downloading to the controller RAM.

Maintenance

During normal operation a program card is continuously supervised. The supervision is partly based on checksum calculation. For the application backup the checksum is calculated in connection to the program card insertion. (For the system software backup the checksum is established during the system program generation, that is, part of the code.)

A red F LED on the MB510 module front indicates hardware error, checksum error or missing program card. If the red F LED is turned on and if the application program card is removed and after that reinstalled again and the red F LED turns off, then you must arrange for a functional test of the backup. This should be performed in a non-critical situation.

In connection to the reinstallation of the hardware a new checksum calculation is made, possibly hiding a memory error with respect to the original DUAP file. The same apply to any replacement or later installation of an application backup program card. Always perform a functional test for safety's sake.

5.8 System Upgrade

How to change a program card including the system software to a variant with an other assembly of program modules, that is an other functional assembly, is described in Section 2.6.6, Enlargement of the System Software.

Revision of system software (system upgrade) is dealt with in the same way.

If you just want to see the content of program modules in your system, please read the label on the program card. The card may be extracted and inserted during operation. System messages will be sent to the operator station. Or preferably you can use the engineering station command SHTARG (Show Target).

Appendix A Hardware Modules

A.1 List of Hardware Modules

By way of introduction, see below a complete list of all types of hardware modules related to the Advant Controller 450. The list includes modules like circuit boards, power supply units and connection units. They are listed in alphabetical order.

A reference is given telling you where to find a module description, including important technical data:

Table A-1. List of Hardware Modules

Type	Denomination	Reference to Description
AI8xx	Analog Input Modules	*S800 I/O User's Guide*
AO8xx	Analog Output Modules	*S800 I/O User's Guide*
CI522A	AF 100 Communication Interface	*Advant Fieldbus 100 User's Guide*
CI531	RS-232-C Communication Interface, two channels	Section A.2, CI531 - RS-232-C Communication Interface
CI532V01	RCOM Communication Interface	*RCOM AC 400 Series*
CI532V02	MODBUS Communication Interface	*MultiVendor Interface* *MODBUS with MS and CI532V02* *AC 400 Series*
CI532V03	Siemens 3964R Communication Interface	*MultiVendor Interface* *Siemens 3964R* *AC 400 Series*
CI534V02	MODBUS Communication Interface	*MultiVendor Interface* *MODBUS with MVB and CI534V02* *AC 400 Series*
CI534V04	Allen-Bradley DF1 Communication Interface	*MultiVendor Interface* *Allen-Bradley DF1* *AC 400 Series*
CI535	Free-programmable MVI Module (C language)	*MultiVendor Interface* *Product Development Kit*
CI538	Free-programmable MVI Module (C language)	*MultiVendor Interface* *Development Environment*
CI541V1	Communication Interface Module	*PROFIBUS-DP* *AC 400 Series*
CI543	GCOM	*MasterNet*

Table A-1. List of Hardware Modules (Continued)

Type	Denomination	Reference to Description
CI570	MasterFieldbus Controller	*MasterFieldbus and S400 I/O User's Guide*
CI572/CI573	Communication Interface Module	*Advant Interface to LONWORKS User's Guide*
CI810A	Advant Fieldbus 100 Communication Interface	*S800 I/O User's Guide*
CI820	Redundant Advant Fieldbus 100 Communication Interface	*S800 I/O User's Guide*
CI830	PROFIBUS Fieldbus Communication Interface	*S800 I/O User's Guide*
CS513	MB 300, MB 300E Communication Interface	*MasterNet*
DI8xx	Digital Input Modules	*S800 I/O User's Guide*
DO8xx	Digital Output Modules	*S800 I/O User's Guide*
DP8xx	Pulse/Frequency measuring modules	*S800 I/O User's Guide*
DSAI 1xx	Analog Input Boards	*S100 I/O Hardware Reference Manual*
DSAO 1xx	Analog Output Boards	*S100 I/O Hardware Reference Manual*
DSAX 110	Analog Input Board	*S100 I/O Hardware Reference Manual*
DSAX 452	Analog Input/Output Units	*MasterFieldbus and S400 I/O User's Guide*
DSBC 17x	Bus Extension Board	*S100 I/O Hardware Reference Manual*
DSDC 111	Motor Drive Control	*S100 I/O Hardware Reference Manual*
DSDI 1xx	Digital Input Boards	*S100 I/O Hardware Reference Manual*
DSDI 4xx	Digital Input Units	*MasterFieldbus and S400 I/O User's Guide*
DSDO 1xx	Digital Output Boards	*S100 I/O Hardware Reference Manual*
DSDP 1xx	Pulse/Frequency Measuring Board	*S100 I/O Hardware Reference Manual*
DSDX 4xx	Digital Input/Output Unit	*MasterFieldbus and S400 I/O User's Guide*
DSRB 110	Dummy Board	*S100 I/O Hardware Reference Manual*
DSRF 197	I/O Subrack with DSSR 122	*S100 I/O Hardware Reference Manual*
DSRF 200	I/O Subrack with DSSR 170, DSSS 171	*S100 I/O Hardware Reference Manual*
DSSB 170	Energy Reservoir	Section A.3, DSSB 170 - Energy Reservoir
DSSR 122	Voltage Regulator 5 V, for single supply	*S100 I/O Hardware Reference Manual*
DSSR 170	Voltage Regulator 5 V, for redundant supply	*S100 I/O Hardware Reference Manual*
DSSS 171	Voting Unit	*S100 I/O Hardware Reference Manual*

Table A-1. List of Hardware Modules (Continued)

Type	Denomination	Reference to Description
DSTA xxx	Connection Units, for analog signals	*S100 I/O Hardware Reference Manual*
DSTC X008	Modem for RS-232-C, 230 V a.c.	Ref. KM1, Westermo Teleindustri AB
DSTC 176	Termination Unit, for S100 I/O bus extension	*S100 I/O Hardware Reference Manual*
DSTC 404	Terminator	*MasterFieldbus and S400 I/O User's Guide*
DSTC 406	Terminator	*MasterFieldbus and S400 I/O User's Guide*
DSTC 451	Over-voltage Protection Unit	*MasterFieldbus and S400 I/O User's Guide*
DSTC 452	Coaxial Modem, for MasterFieldbus	*MasterFieldbus and S400 I/O User's Guide*
DSTC 454	Optical Modem, for MasterFieldbus 2 Mbit/s	*MasterFieldbus and S400 I/O User's Guide*
DSTC 454L	Optical Modem, for MasterFieldbus 375 kbit/s	*MasterFieldbus and S400 I/O User's Guide*
DSTD xxx	Connection Units, for digital signals	*S100 I/O Hardware Reference Manual*
DSTK xxx	Internal cables	*S100 I/O Hardware Reference Manual*
DSTX xxx	Connection Units, for special applications	*S100 I/O Hardware Reference Manual*
DSTY 101	Isolation Amplifier	*S100 I/O Hardware Reference Manual*
MB510	Program Card Interface	Section A.4, MB510 - Program Card Interface
PM511V	Processor Module	Section A.5, PM511V - Processor Module
PU535	Free-Programmable Module (C language)	*Free-Programmable Module Development Environment*
RB5xx	Dummy Modules	Section A.6, RB5xx - Dummy Modules
RC527	Fan Unit	Section A.7, RC527 - Fan Unit
RE810	Wall Cabinet	*S800 I/O User's Guide*
RF533	Controller Subrack 12 SU	Section A.8, RF533 - Controller Subrack 12 SU
RF540, RF541	Modem Subrack	Section A.9, RF540, RF541 - Modem Subrack
RM500	Cabinet	Appendix B, RM500 Cabinet - Data Sheet
SA1xx	Power Supply Units	Section A.10, SA1xx - Power Supply Units
SB510	Backup Power Supply, 110-230 V a.c./d.c.	Section A.11, SB510 - Backup Power Supply 110-230 V a.c/d.c.
SB511	Backup Power Supply, 24-48 V d.c.	Section A.12, SB511 - Backup Power Supply 24-48 V d.c.
SB522	Battery Unit	Section A.13, SB522 - Battery Unit
SC5x0	Submodule Carriers	Section A.14, SC5x0 Submodule Carriers
SD150	d.c./d.c. Converter	Section A.15, SD150 - d.c./d.c. Converter
SD81x	Power Supply	*S800 I/O User's Guide*

Table A-1. List of Hardware Modules (Continued)

Type	Denomination	Reference to Description
SR511	Regulator 24 V/5 V	Section A.16, SR511 - Regulator 24 V/5 V
SS110	Voting Unit	*S100 I/O Hardware Reference Manual*
SV540, SV541	Power Distribution Unit (with isolation transformer)	Section A.17, Power Switch and Distribution Units
SV542, SV543	Power Distribution Unit (with isolation transformer)	Section A.17, Power Switch and Distribution Units
SX540	Power Switch and Distribution Unit	Section A.17, Power Switch and Distribution Units
SX541	Power Distribution Unit	Section A.17, Power Switch and Distribution Units
SX542	Power Distribution Unit	Section A.17, Power Switch and Distribution Units
SX550	Power Switch and Distribution Unit	Section A.17, Power Switch and Distribution Units
SX551	Power Distribution Unit	Section A.17, Power Switch and Distribution Units
SX555	Power Switch and Distribution Unit	Section A.17, Power Switch and Distribution Units
SX554	Distribution Unit 60 V d.c.	Section A.18, SX554 - Distribution Unit 60 V d.c.
TB8xx	Module Bus Modem	*S800 I/O User's Guide*
TB805, TB806	Cable Adaptor	*S800 I/O User's Guide*
TB807	Terminator	*S800 I/O User's Guide*
TB815	Interconnection Unit	*S800 I/O User's Guide*
TC501Vxxx	Cable Adapter	*S800 I/O User's Guide*
TC505	Connection Unit	*Advant Fieldbus 100 User's Guide*
TC512Vx	Advant Fieldbus 100 Twisted Pair Modem.	*Advant Fieldbus 100 User's Guide*
TC513Vx	Advant Fieldbus 100 Twisted Pair/Coaxial Modem	*Advant Fieldbus 100 User's Guide*
TC514Vx	Advant Fieldbus 100 Twisted Pair/Optical Modem.	*Advant Fieldbus 100 User's Guide*
TC515Vx	Advant Fieldbus 100 Twisted Pair/Twisted Pair Modem.	*Advant Fieldbus 100 User's Guide*

Table A-1. List of Hardware Modules (Continued)

Type	Denomination	Reference to Description
TC516	Advant Fieldbus 100 Twisted Pair Modem for bus redundancy	*Advant Fieldbus 100 User's Guide*
TC520	System Status Collector	Section A.19, TC520 - System Status Collector
TC560Vx	Optical Modem, for S100 I/O bus extension (Near side)	*S100 I/O Hardware Reference Manual*
TC561Vx	Optical Modem, for S100 I/O bus extension (Far side)	*S100 I/O Hardware Reference Manual*
TC562	Modem for RS-232-C, 24 V	Ref. Westermo Teleindustri AB
TC570	MasterFieldbus Connection Unit	MasterFieldbus and S400 I/O User's Guide
TC625	Advant Fieldbus 100 Coaxial Modem	*Advant Fieldbus 100 User's Guide*
TC630	Advant Fieldbus 100 Coaxial/Optical Modem	*Advant Fieldbus 100 User's Guide*
TKxxx	Cables	Depending on application (S100, S800, MasterNet, Advant Fieldbus 100 etc.)
TK560	Interconnector, near side	*S100 I/O Hardware Reference Manual*
TU8xx	Modules Termination Unit	*S800 I/O User's Guide*
TX507	Capacitive Decoupling Device	Section 2.2.5.5, Grounding of Communication Cable Shields
TX560	Terminator, near side	*S100 I/O Hardware Reference Manual*

A.2 CI531 - RS-232-C Communication Interface

- Two RS-232-C communication interface
- Modem support.

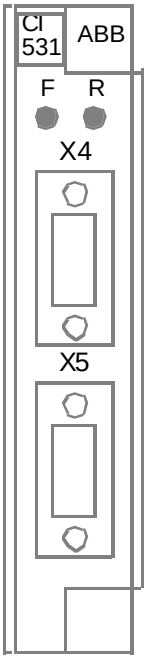

Front view

Description

CI531 is a submodule destined to the Submodule Carrier SC510 and SC520 in Advant Controller 450 and Processor Module PM150 in Advant Controller 410. The two RS-232-C communication interfaces are generally used in the following applications: Printer, EXCOM, MasterView 320. See the controller documentation.

The communication channels support communication speeds up to 19.2 kbaud which is the limit set by the system software.
Both channels run at this speed simultaneously.

The maximum communication distance without modem is 15 m.
The modem signals which are supported are found in Table A-2 below.

Communication pins are short-circuit proof.

Technical Data

Indicators

LED R (green) on module front. Indicates module running normally.

LED F, Fault (red) on module front.

Jumpers

The board contains one jumper for special purposes.
In normal operation, always keep jumper S1 in position 3 - 4 ("parking place").
The component and position indications are found on the printed circuit board.

Connectors

Serial channels 1 and 2 connectors (X4 and X5):

- Connector type	Nine-pole male DSUB (DE9P)
- Placement	On module front
- Pin designation	See Table A-2 below.

Table A-2. Pin Designation for Channel 1 and 2. Connector X4 and X5

Pin	Short	Description
1	DCD	Data Carrier Detect
2	RD	Receive Data
3	TD	Transmit Data
4	DTR	Data Terminal Ready
5	GND	Ground
6	DSR	Data Set Ready
7	RTS	Request To Send
8	CTS	Clear To Send
9	RI	Ring Indicator

Power Supply

5 V	typical	400 mA
	max.	670 mA
24 V	max.	40 mA
Power loss (heat)	typical	3 W

Mechanical Data

Module size: Occupying one submodule slot (H = 95 mm, L = 140 mm, connector not included)

Weight: 0.13 kg (0.29 lbs.)

A.3 DSSB 170 - Energy Reservoir

- For use with 24 V direct d.c. supply
- Provides a backup time of about 5 ms at full load.

Description

The Energy Reservoir DSSB 170 is a capacitor unit intended for use with 24 V direct supply (without d.c./d.c. converter). In the event of mains power failure, the unit provides the system with energy necessary for storage of important data.

DSSB 170 is built up on a 19-inch apparatus plate.

The controller and the first I/O subrack require one energy reservoir. Additional I/O subracks need a second unit.

The following description refers to the block diagram (next page).

The capacitor charging current is limited with a low-resistance power resistor.

The energy stored in the capacitors is discharged via a resistor when the unit is disconnected from the mains power supply and the load.

Unregulated d.c. supply is connected at the terminals X1:1 - 4. The output X2:1 - 4 supplies the 5 V regulator units with 24 V.
A serial diode prevents the energy stored in the unit from leaking back to the supply mains in the event of a power failure.

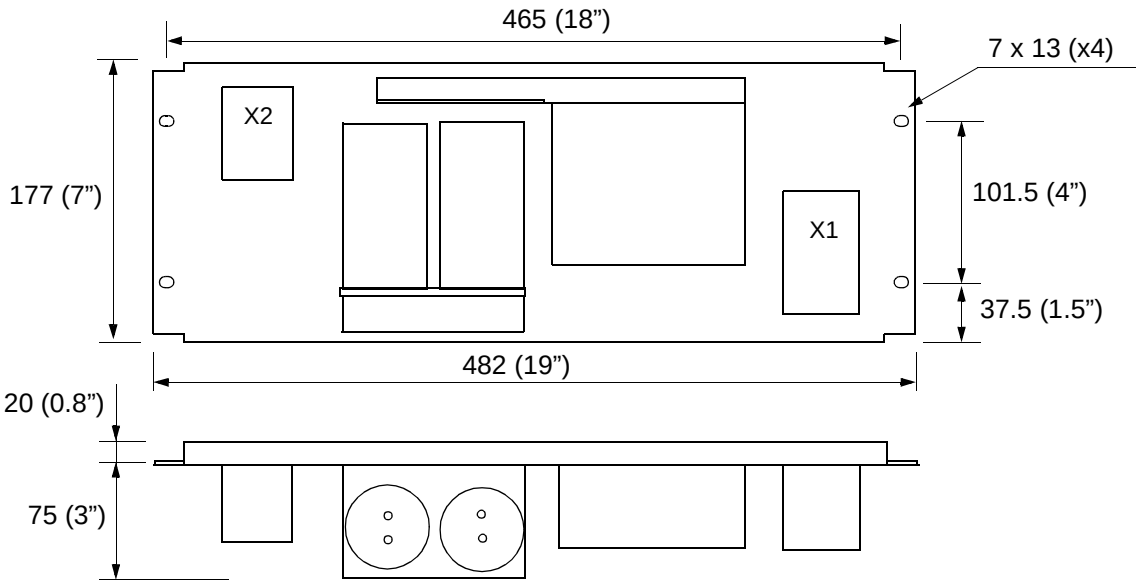

All measurements in mm (in.)

Technical Data

Table A-3. DSSB 170, Operating Data

Item	Value
Voltage rating input	24 V d.c.
Output voltage	24 V d.c.
Backup time (in the range) 18.5 - 16 V with 25 A load	5 ms
Voltage derivative with power failure with 25 A load	0.3 V/ms

Mechanical Data

Width	482 mm (19")
Height	177 mm (7"), 4 U
Depth	75 mm (3")
Weight	2.8 kg (6.2 lbs.)

Block Diagram

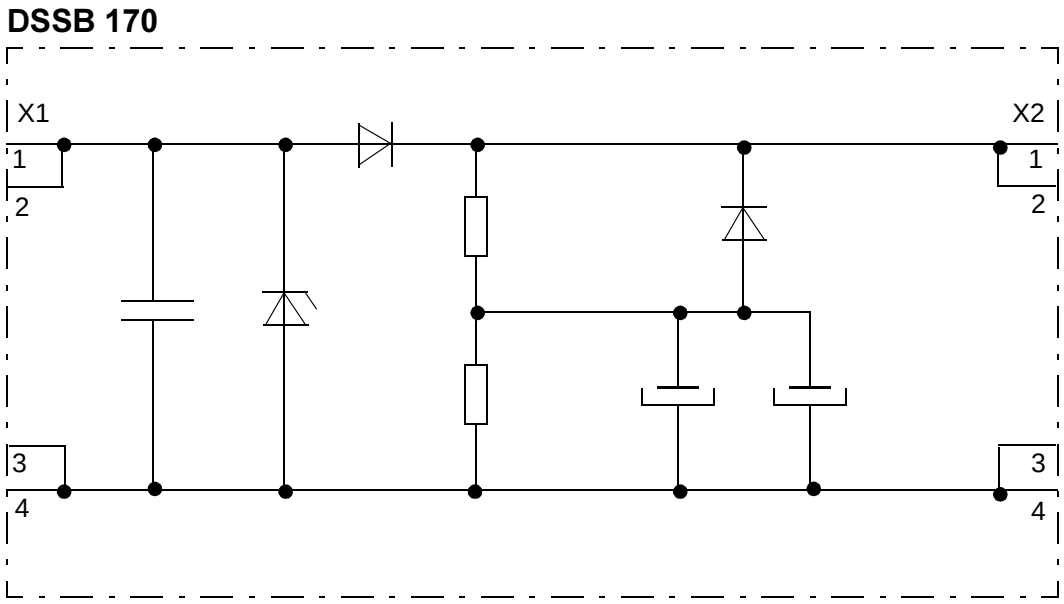

A.4 MB510 - Program Card Interface

- Holds flash PROM of the type PCMCIA
- Submodule which fits into Submodule Carrier SC5xx or Processor Module PM150.

Description

Utilizing an MB510 is one method of program card installation in an Advant Controller 400 Series.

A program card is equipped with flash PROM for different use. For example to store and backup the system program of the controller.
An optional use is to store and backup the application program (separate program card).
The flash PROM content is loaded into the processor module RAM during the primary initialization of the controller.

The diagnostics are mainly based on cyclic check sum calculation.
A red LED on the module front indicates hardware error, check sum error or missing program card.

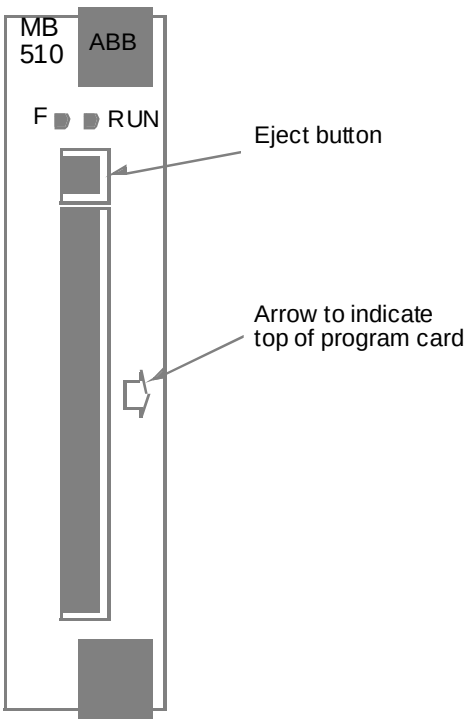

Front view

Technical Data

Indicators

LEDs on module front:

F (red)	Module error
RUN (green)	Module running normally

Power Supply

5 V d.c.	typical	10 mA
	max	170 mA (when reading)
Power loss (heat)	typical	0.05 W

Mechanical Data

Module size	occupying one submodule slot
Module weight	0.12 kg (0.26 lbs.)

Block Diagram

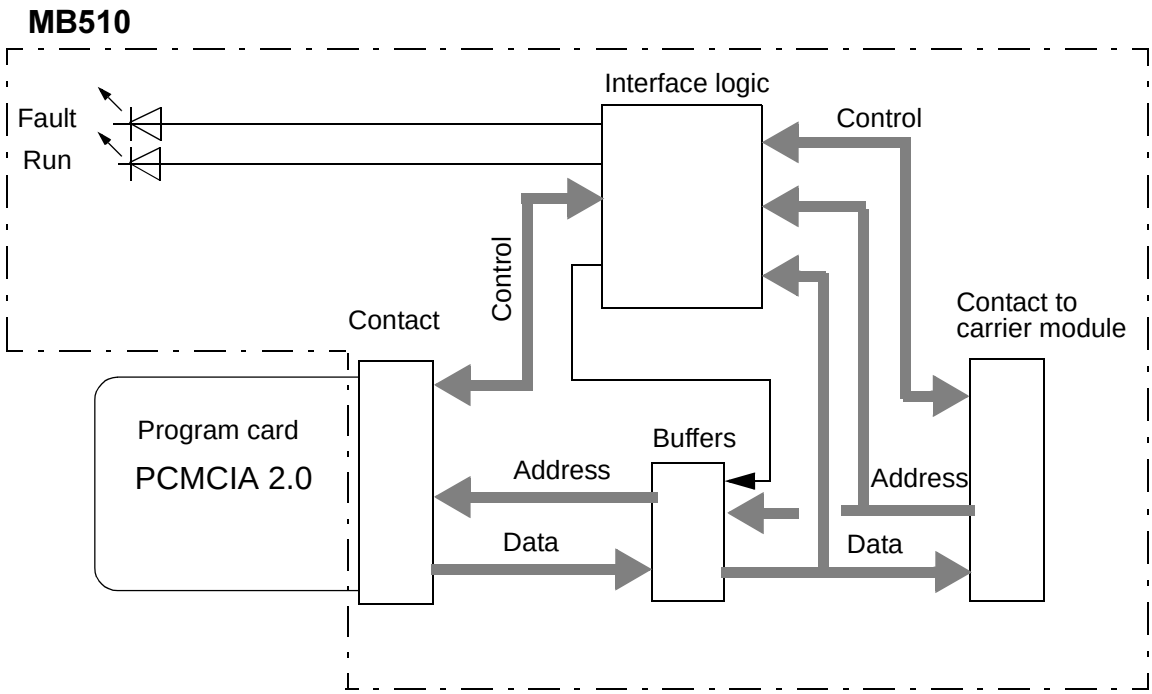

A.5 PM511V - Processor Module

- Futurebus+ Board
- 25 MHz 68040 Processor
- 8 or 16 Mbyte Dynamic RAM with ECC
- Hardware support for redundant processors
- S100 I/O Interface
- PCMCIA slot for flash memory card
- Service tool connector on front
- Boot PROM and SRAM

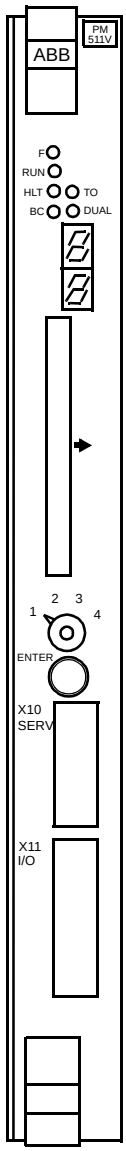

Front view

Description

PM511V is a processor module for Advant Controller 450. It is designed to fit into RF533 series controller subracks.

The Motorola 68040 processor is a 32-bit virtual memory microprocessor with an integrated floating point unit and with dual independent instruction and data demand paged memory management units (MMUs). It also has two separate 4 kbyte caches, one for data and one for instructions.

The dynamic RAM memory is organized as a 64-bit memory with an 8-bit cyclic redundancy check sum.

The module has a Futurebus+ type interface with 32-bit address/data lines supporting compelled transfers.
Distributed arbitration is used. Arbitration messages are supported.

To support a configuration with two redundant processor modules with one running in backup mode, PM511V is equipped with logic that transfers a copy of all writes in the primary processor to the backup processor, thereby keeping a complete updated copy of the primary processor's memory in the backup processor. This makes it possible for the backup processor to resume the operation directly in the event of a failing primary processor.

The module has an interface to the S100 I/O extension bus which makes it possible to connect it to the bus extension board DSBC 174 or DSBC 176 in a S100 I/O rack.

The PCMCIA slot accepts flash memory cards for system software.

The module front has LED indicators for status information, a start mode selector switch and an ENTER push button to manually initialize the controller.
You can find the operation description of these facilities in this manual.

A label on module side gives the full identification and information of actual memory size. Available versions are designated PM511V08 or PM511V16.

Technical Data

Memory

8 or 16 Mbyte dynamic RAM for system software and application program.

Indicators

LEDs on module front:

F (red)	Module error
RUN (green)	Module running normally
HLT (red)	CPU halted
TO (yellow)	Bus time-out
BC (green)	Backup voltage for RAM connected
DUAL (green)	Redundant processor ready

Power Supply

5 V d.c.	typical	4900 mA
	max.	6000 mA
24 V d.c.	typical	200 mA
	max.	280 mA
Power loss (heat)	typical	25 W

Mechanical Data

Module size	12 SU, 6 mp
Module weight	0.8 kg (1.8 lbs.)

A.6 RB5xx - Dummy Modules

Description

Empty slots within a controller subrack should be equipped with dummy modules.
The reason is:

- Keeping air vented in a settled way
- Exterior appearance.

Available module types are:

Type	Denomination/ApplicationDimension
RB510	Dummy Module, full height.12 SU, 6 mp (300 mm, 30 mm) Substituting, for example, Carrier Module, Processor Module
RB520	Dummy Module, for submodule slot. Substituting, for example, Communication Interface
RB530	Dummy Module, half height.6 SU, 6 mp (150 mm, 30 mm)
RB540	Dummy Module, half height double width6 SU, 12 mp (150 mm, 60 mm) Substituting, for example, Regulator

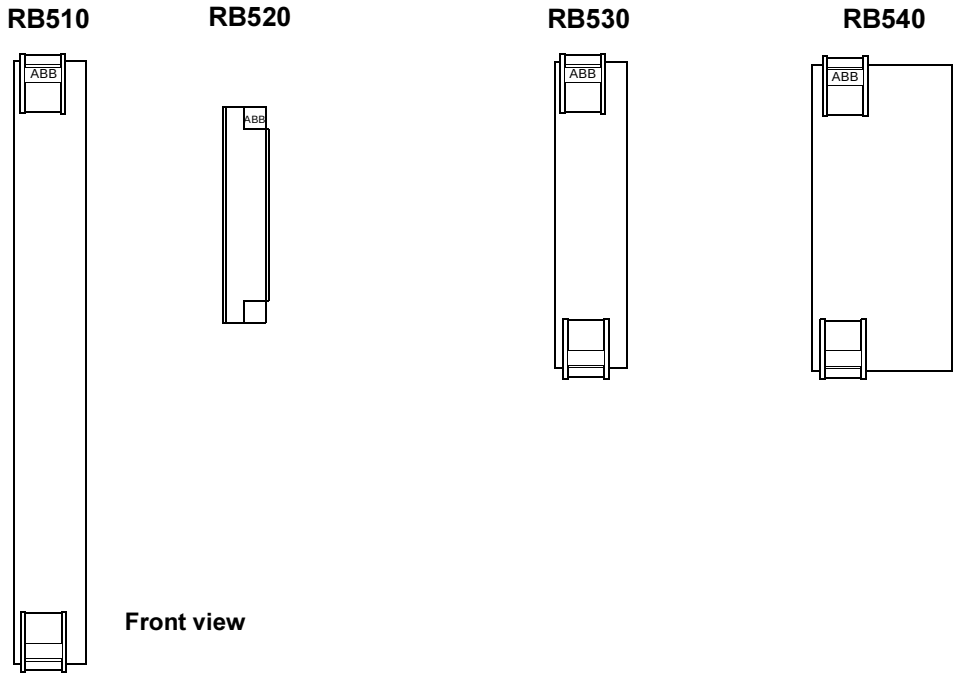

A.7 RC527 - Fan Unit

- High performance, three fans
- Uses redundant power supplies +24 VA and +24 VB
- Each fan separately fused
- Fan rotating speed supervision

Description

Cassette model including three fans powered by 24 V d.c. Redundant power supply is possible. For proper system function, all three fans must work.
The unit is intended to be located beneath a controller subrack, aimed at lowering the operating temperature of the electronic modules.

Operation is supervised by a speed sensor on each fan. Indication FANFAIL is given when one or more fans fail.

Dust filter should be replaced at regular interval with respect to actual environment.

An integrated cable duct is used to support cables to and from the front connectors of the modules in the subrack.

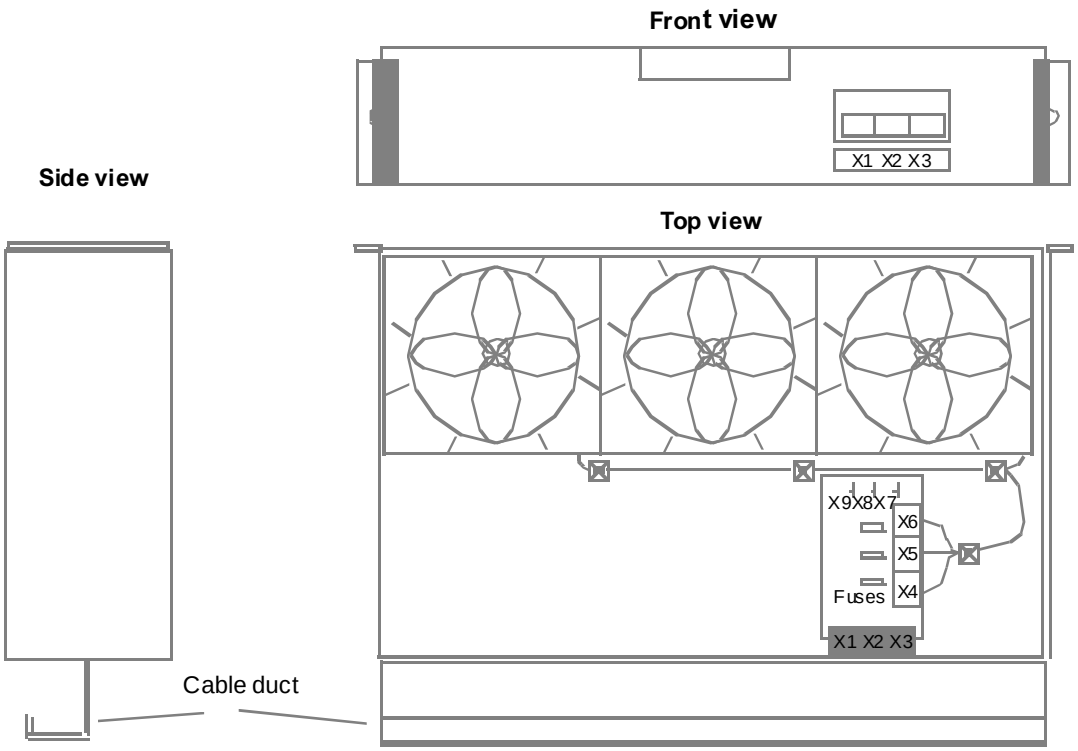

Technical Data

Power Supply

24 V d.c., max. 0.7 A (for three fans)

Power loss (heat) typical 15 W

Fuses

Each fan protected by a 0.8 A F Miniature Fuse Link.

Alarm Indication

FANFAIL-signal	Low level/0 V - Fan OK High level/16.3 - 32 V - One or more fans have failed (<750 rpm) Loadable <7.3 mA

Mechanical Data

Dimension: 482 mm x 330 mm x 100 mm (19" x 13" x 4") excl. cable duct
482 mm x 425 mm x 100 mm (19" x 16.7" x 4") incl. cable duct

Weight: 3 kg (6.6 lbs.)

Maintenance Parts

Miniature Fuse Link, 5 x 20mm, 0.8AF fast,	ABB part no. 3BSC 770 001 R43
Filter Carpet (dust filter)	ABB part no. 3BSC 930 057 R0001
Fan (spare part)	ABB part no. 6480 096-9

Block Diagram

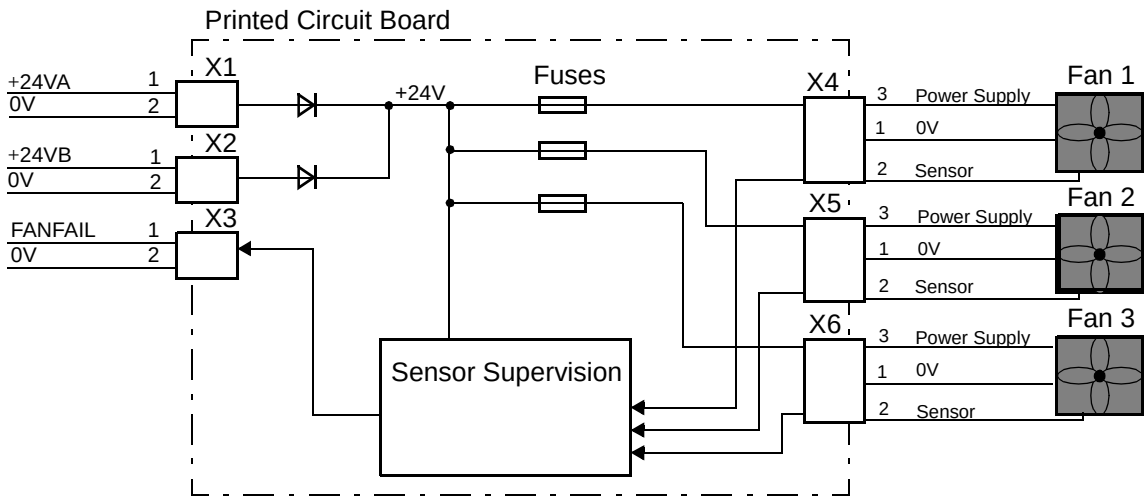

A.8 RF533 - Controller Subrack 12 SU

- 19-inch standard width
- Height 300 mm (12 SU)
- Futurebus+ back plane.

Description

Subrack for electronic modules with front connection of cables.

Mount the subrack close to the back wall in a cabinet. Admittance to the rear side of the subrack is not necessary after the installation.

A number of slots for modules of different sizes are included. See figure below.

Each module is individually locked by snap-on handle and screws.

The back plane is raised 35 mm and provides test and connection facilities for the power supply and battery supply.

A fan unit, RC527, is mounted beneath the subrack. This unit provides a cable duct to use for the cables connected to the modules.

Front view

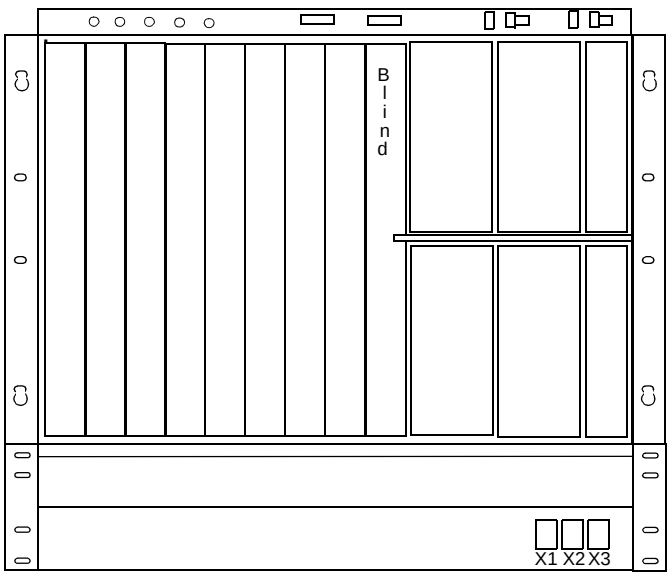

Technical Data

Backplane Terminals (Panel layout, see below)

2.1 V and 3.3 V	Test of termination voltages
5 V	Test of 5 V power supply of the controller subrack
5VBACK	Test of the RAM backup voltage 5 V
24 V/A resp. 24 V/B	Connection of system power supply 24 V (B used at redundancy)
VBAT/B resp. VBAT/A	Connection of NiCd battery (A used to double the battery capacity)
AUXx/y, PFAIL/x	Connections not applied

Mechanical Data

Dimension: See dimension drawing below

Weight: 8.5 kg (18.7 lbs.)

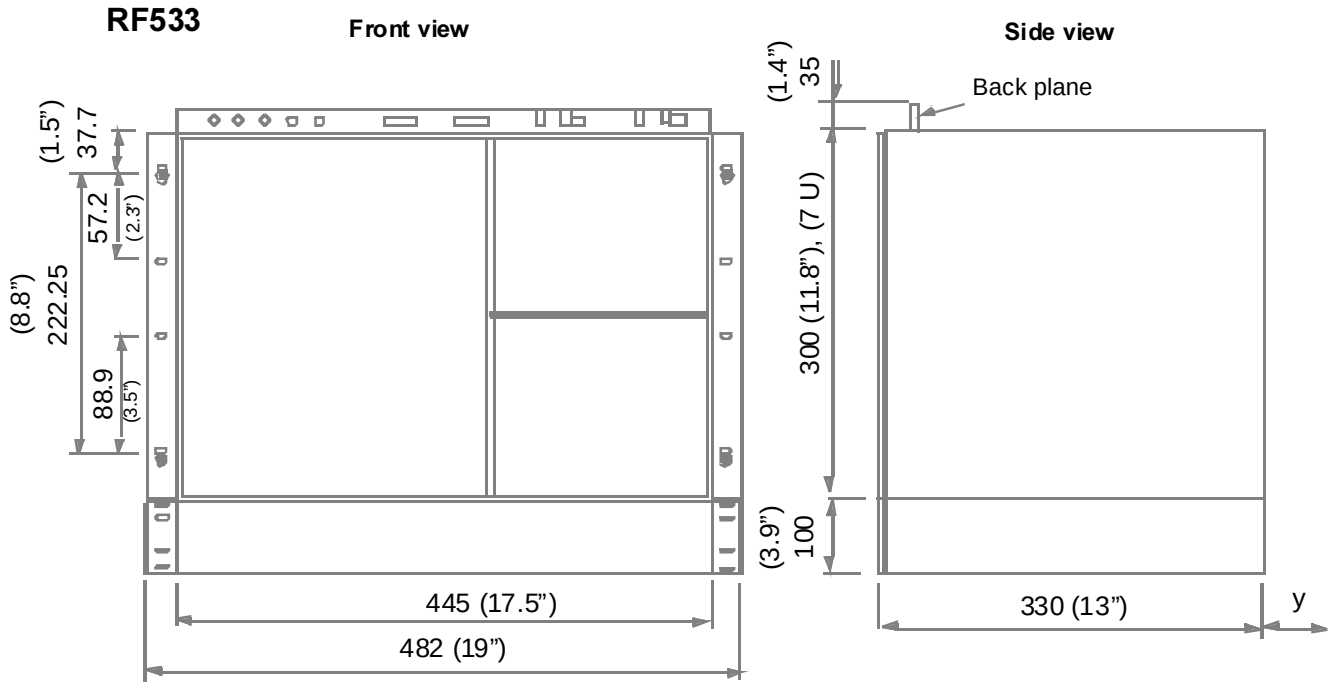

All measurements in mm (in.)

y - min100 mm space for cables and cable duct

Test and connection facilities provided by the raised backplane

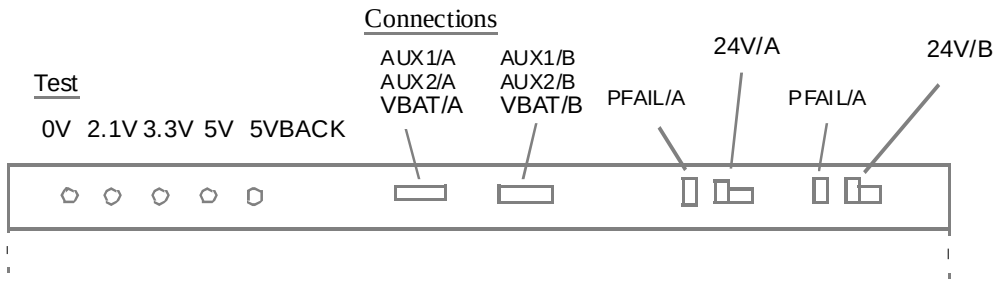

A.9 RF540, RF541 - Modem Subrack

- Destined for auxiliary equipment
- Screw or top hat rail assembly of units
- 24-inch standard (RF540) and 19-inch standard (RF541)
- Includes cable duct.

Description

RF540 and RF541 are subracks for assembly of auxiliary equipment like modems and certain connection units for communication links.

RF541, the 19-inch variant is described below. RF540 for 24-inch standard differs in width and number of units only.

A maximum of nine modems, for example, type TC625 or TC630 for Advant Fieldbus 100, can be fixed by two screws included in the modem design. (RF540 12 modems.)
As an alternative, a top hat rail is available for flexible application.

The subrack provides two contact groups which simplify 24 V distribution from the cabinet supply to the units.
The pluggable connection of the power supply implies increased maintainability.

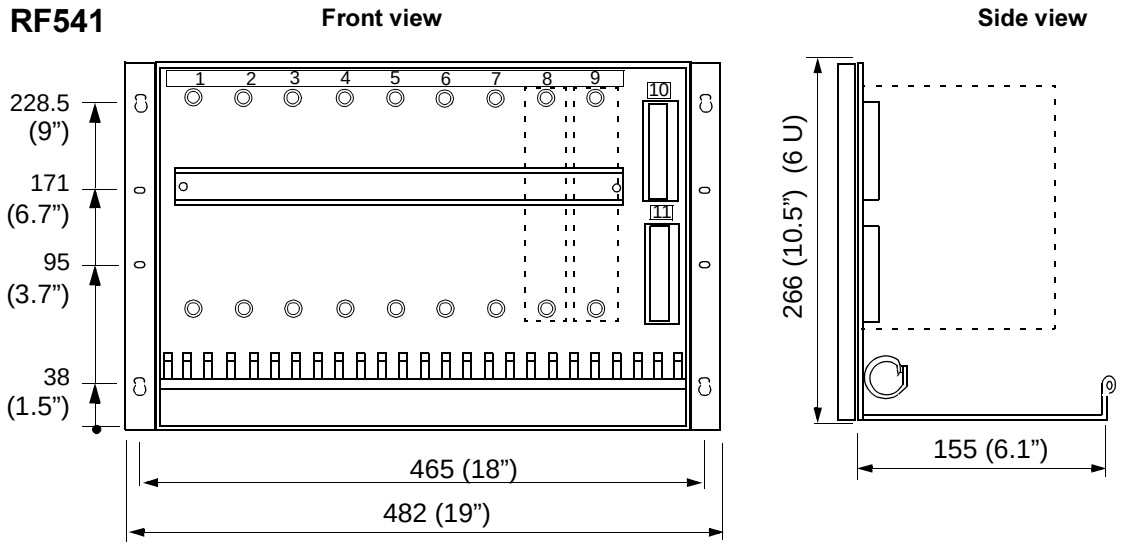

Position: 1 2 3 4...

Position referred addressing is not used in S100 I/O

All measurements in mm (in.)

Technical Data

Mechanical Data

Dimension: Width measurement for the two variants are given below.
Otherwise see dimension drawing on previous page.

	RF541	RF540
Total width	482 mm (19")	609 mm (24")
Hole pattern	465 mm (18")	592 mm (23")
Weight:	RF541	3 kg (6.6 lbs.)
	RF540	3.5 kg (7.7lbs.)

Block Diagram

Application of contact groups

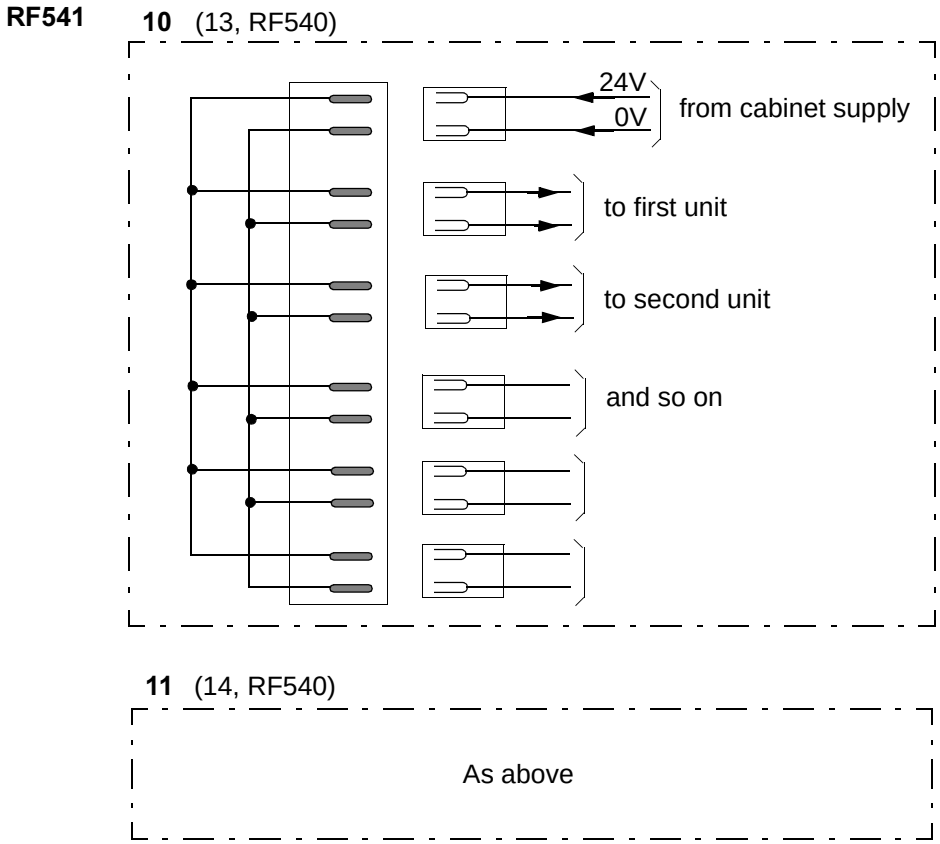

A.10 SA1xx - Power Supply Units

- Power supply units for a.c. to d.c. conversion
- Variants for different mains supply
- Unstabilized d.c. output
- Variants for different output voltage and load
- Provides galvanic isolation
- Rack or wall installation.

Description

SA1xx is a series of power supply units converting single phase a.c. to smooth but unstabilized 24 V or 48 V d.c. A unit includes a transformer giving galvanic isolation between the mains voltage and the d.c. output.
It also includes a full wave rectifier and a filtering capacitor.
The power supply unit is internally loaded to reduce the voltage at d.c. load switch off and to discharge the capacitor at mains switch off.

Electric installation: Plug-in contacts. Primary connector EN 60 320, C20.

Mechanical installation: Rack or wall mounted, 19-inch width.

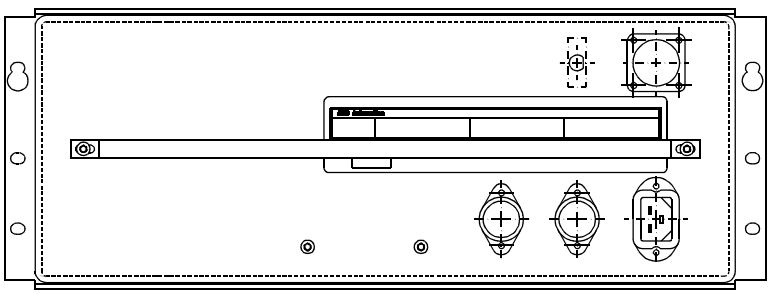

Front view

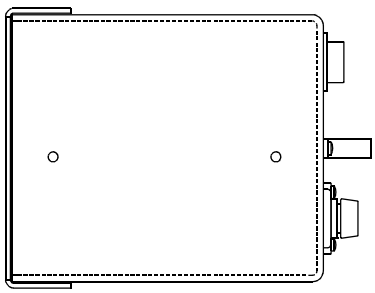

Side view

Technical Data

Table A-4. SA1xx, Individual Technical Data

Parameter	SA161	SA162	SA167	SA168	SA171	SA172
Mains voltage a.c., nominal	120 V	230 V	120 V	230 V	120 V	230 V
Mains voltage variation	85 - 110%					
Mains voltage a.c., max. (f=47-65Hz)	142 V	285 V	142 V	285 V	142 V	285 V
Mains load VA	450 VA		900 VA		450 VA	
Mains load W	320 W		705 W		320 W	
cos ϕ	0.7 min.		0.75 min.		0.7 min.	
Efficiency factor	85% typ.					
Output voltage at max. current	26 V, 10 A		25 V, 25 A		50 V, 5 A	
Ripple 100 Hz, peak to peak	2 V max.		1 V max.		4 V max.	
r m s (at max. current)	0.7 V max.		0,35 V max.		1.4 V max.	
Maximum load	10 A/260 W		25 A/600 W		5 A /260 W	
d.c. voltage slope at mains blackout and maximum current	200mV/ms		250 mV/ms		250 mV/ms	

Safety Classification

Class I according to IEC 536 (earth protected).

Protection Rating

IP20 according to IEC 529 (IEC 144).

Insulation

Rated insulation voltage 400 V a.c.
Dielectric test voltage 3250 V a.c., 50/60 Hz

Fuses

Table A-5. Fuses in SA1xx

Fuse	SA161	SA162	SA167	SA168	SA171	SA172
F1 a.c. (Midget Fuse, Fast)	10AF	6AF	15AF	10AF	10AF	6AF
F2 d.c. (with reset button, Time Lag)	15AT	15AT	30AT	30AT	8AT	8AT

Mechanical Data

Dimension:	width	482 mm (19")
	height	177 mm (7"), corresponds to 4 U height modules in a cabinet
	depth	255 mm (10")
Weight:	SA161/162	15 kg (33 lbs.)
	SA167/168	24 kg (53 lbs.)
	SA171/172	15 kg (33 lbs.)

Maintenance Parts

Midget Fuse, 10 * 38 mm	6 AF (fast), ABB part no.	5672 827- 6
	10AF	5672 827- 10
	15AF	5672 827-15

Block Diagram

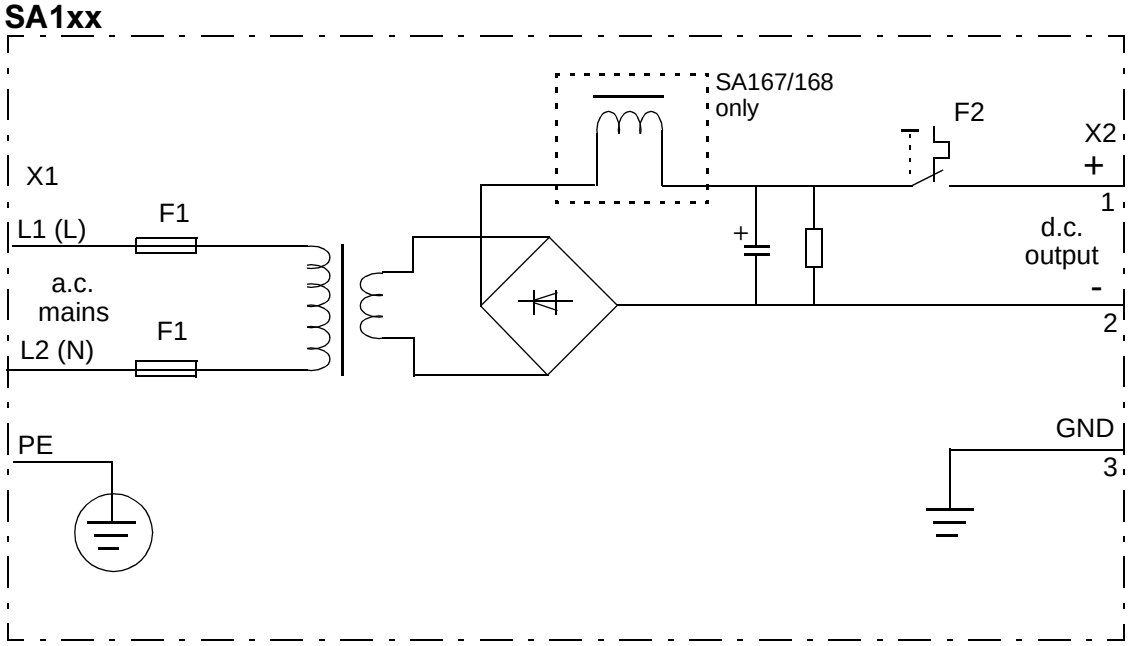

A.11 SB510 - Backup Power Supply 110-230 V a.c/d.c.

Module included in backup power supply system for RAM

Connectable to mains supply 100 - 230 V a.c. or d.c.

Three modes of operation: battery recharging and trickle charging from mains supply and battery discharging

Fits NiCd battery unit SB522.

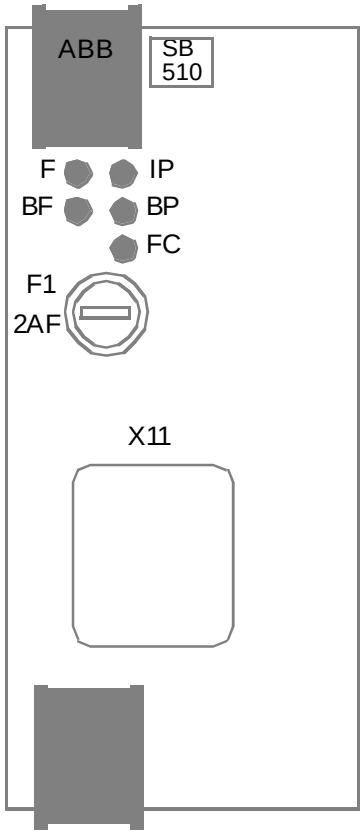

Front view

Description

SB510 is a battery charger which works together with one single battery package, for example, SB522. Use these two modules for current supply of processor module RAM in the event of mains supply drop out.

The capacity expressed in time of backup depends on the application. Please refer to the actual Advant Controller documentation. Use two sets (SB510 and SB522) to double the backup time.

SB510 is positioned in a controller subrack to interface with the backplane bus and the battery.
Mains supply is connected via a module front connector.

The mains supply input provides fusing and other adequate protection.
The input energy is converted and used for 5 V internal unit supply and by a controlled current generator for battery charging.
The current generator produces a current adapted to the mode of operation: recharging, which takes approximately 10 hours after power-up or battery replacement, or trickle charging.
During recharging, a LED FC on the module front lights up.

Diagnostic functions continuously supervise the operation. Error and other statuses are indicated by module front LEDs. The information is available on the backplane for further processing by the system status functions.

At installation, insert the module in the subrack first. Then connect the power supply (X11)!

Technical Data

Input Data

Mains supply:	110 - 230 V a.c.; variation -15 to +10%; ripple <15%
	110 - 230 V d.c.; -20 to +20%; ripple <15% (no respect to polarity at d.c.)
Max. power:	25 VA

Safety Classification:	Class I according to IEC 536 (earth protected)
Protection Rating:	IP20 according to IEC 144
Insulation:	Dielectric test voltage 3.2 kV d.c. 2 sec. (Isolation provided by a transformer).

Fuses

The mains supply input includes a fuse 2AF (fast)
(accessible from the module front).

Power Supply of RAM

Output voltage at normal operation: 5.6 V ±0.2 V (zero load)
Output voltage at backup operation: 6.0 V ±0.2 V
Max. current: 2 A
Notes:
- The output voltage level is raised during backup operation to compensate for voltage drops in voting circuitry.
- The output current is short-circuit proof.
- The physical output has a serial diode to provide two SB510s in parallel operation.

Battery Charging

Designed to NiCd battery 12 V, 4 Ah, for example, SB522.
Charging current:

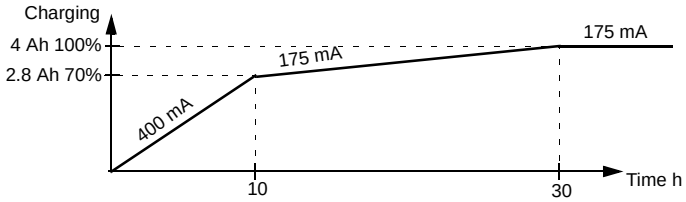

Indicators

LEDs on module front:

F, Fault (red)	Low-charging current, low 5 V supply (IP is supposed to indicate converter in operation)
IP, Input Power (green)	Mains supply available, converter in operation
BP, Battery Powered (ylw)	Mains supply not available, discharging of battery
BF, Battery Fault (red)	Discharged/unconnected battery, short-circuit or interruption in battery, cold battery at start
FC, Fast Charging (ylw)	Indicates recharging after power-up or battery replacement (10 hours).

Maintenance Parts

Miniature Fuse Link, 5 x 20 mm, 2AF (fast) ABB part no. 5672 2011-17

Mechanical Data

Module size: 6 SU, 12 mp ("half height, double width")
Weight: 0.95 kg (2.1 lbs.)

Block Diagram

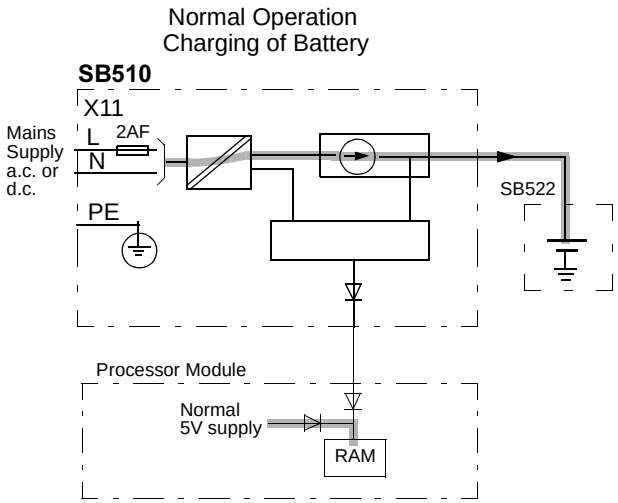

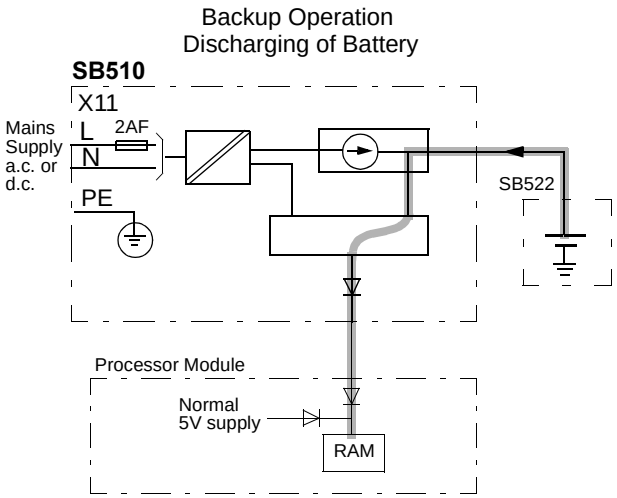

A.12 SB511 - Backup Power Supply 24-48 V d.c.

Module included in backup power supply system for RAM

Connectable to mains supply 24 - 48 V a.c. or d.c.

Three modes of operation: battery recharging and trickle charging from mains supply and battery discharging

Fits NiCd battery unit SB522.

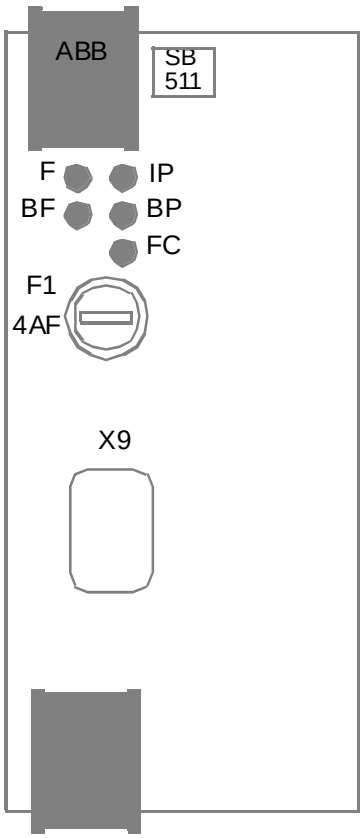

Front view

Description

SB511 is a battery charger which works together with one single battery package, for example, SB522. Use these two modules for current supply of processor module RAM in the event of mains supply drop out.

The capacity expressed in time of backup depends on the application. Please refer to the actual Advant Controller documentation. Use two sets (SB511 and SB522) to double the backup time.

SB511 is positioned in a controller subrack to interface with the backplane bus and the battery.
Mains supply is connected via a module front connector.

The mains supply input provides fusing and other adequate protection. The input energy is converted and used for 5 V internal unit supply and by a controlled current generator for battery charging.
The current generator produces a current adapted to the mode of operation: recharging, which takes approximately 10 hours after power-up battery replacement, or trickle charging.
During recharging, a LED FC on module front lights up.

Diagnostic functions continuously supervise the operation. Error and other statuses are indicated by module front LEDs. The information is available on the backplane for further processing by the system status functions.

At installation, insert the module in the subrack first. Then connect the power supply (X9)!

Technical Data

Input Data

Mains supply:	24-48 V d.c.; variation -20% to +20%; ripple < 15%
Max. power:	25 VA

Safety Classification:	Class I according to IEC 536 (earth protected)
Protection Rating:	IP20 according to IEC 144
Insulation:	Dielectric test voltage 2.0 kV d.c. 2 sec. (Isolation is provided by a transformer)

Fuses

The mains supply input includes a fuse 4AF (fast) (accessible from the module front).

Power Supply of RAM

Output voltage at normal operation: 5.6 V ±0.2V (zero load)
Output voltage at backup operation: 6.0 V ±0.2V
Max. current: 2 A
Notes:
- The output voltage level is raised during backup operation to compensate for voltage drops in voting circuitry.
- The output current is short-circuit proof.
- The physical output has a serial diode to provide two SB511s in parallel operation.

Battery Charging

Designed to NiCd battery 12 V, 4 Ah., for example, SB522.
Charging current:

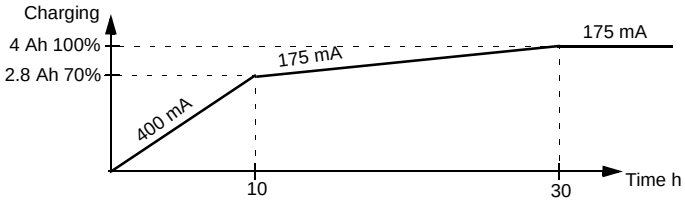

Indicators

LEDs on module front:

F, Fault (red)	Low-charging current, low 5 V supply (IP is supposed to indicate converter in operation)
IP, Input Power (green)	Mains supply available, converter in operation
BP, Battery Powered (ylw)	Mains supply not available, discharging of battery
BF, Battery Fault (red)	Discharged/unconnected battery, short-circuit or interruption in battery, cold battery at start
FC, Fast Charging (ylw)	Indicates recharging after power-up or battery replacement (10 hours)

Maintenance Parts

Miniature Fuse Link, 5 x 20 mm, 4AF (fast) ABB part no. 5672 2011-20

Mechanical Data

Module size: 6 SU, 12 mp ("half height, double width")
Weight: 0.95 kg (2.1 lbs.)

Block Diagram

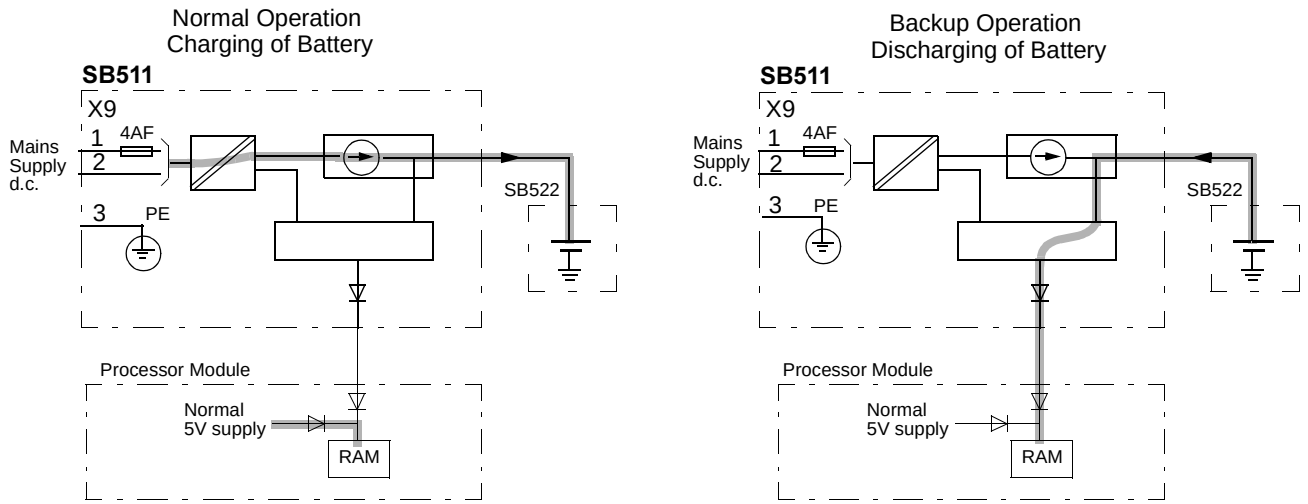

A.13 SB522 - Battery Unit

- Rechargeable 12 V, 4 Ah NiCd battery
- Charging and discharging via the battery charger
- Fits Battery Charger SB510, SB511
- Used for backup current supply of RAM.

Description

SB522 includes 10 NiCd cells size D organized in two lines.
The battery package as well as the connecting device are semi-protected.

There is a built-in non-replaceable fuse to protect against shorts and results such as fire.

Store SB522 in a charged or discharged condition without considerable influence to useful life.

To be installed vertically in a well-ventilated place.

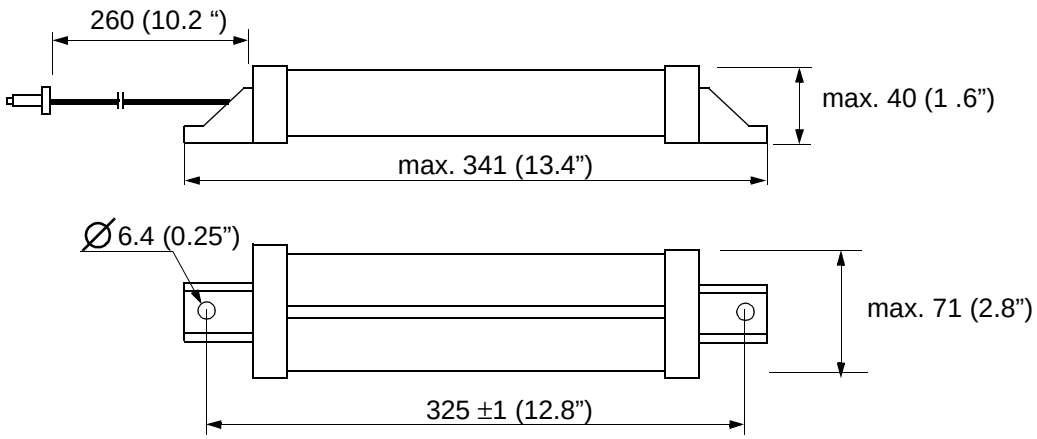

All measurements in mm (in.)

Technical Data

Electrical Data

Nominal battery voltage		12 V
Capacity		4 Ah (one-hour discharge)
Internal, non-replaceable fuse		20 A (quick action)

Mechanical Data

Dimension:	width	max. 71 mm (2.8")
	height	max. 350 mm (13.8")
	depth	max. 40 mm (1.6")
Weight:		1.4 kg (3.1 lbs.)

Reliability Figures

Useful life	> 3 years

Maintenance

Replace the battery after three years of normal operation.
The battery includes cadmium and is to be treated as **hazardous waste**.

Maintenance Parts

Battery Unit SB522

Block Diagram

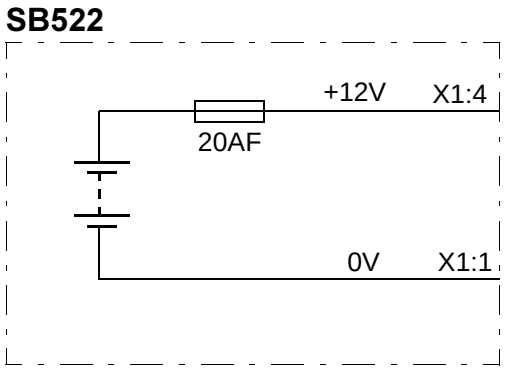

A.14 SC5x0 Submodule Carriers

- Permit flexible functional disposition
- Variants with/without CPU resources.

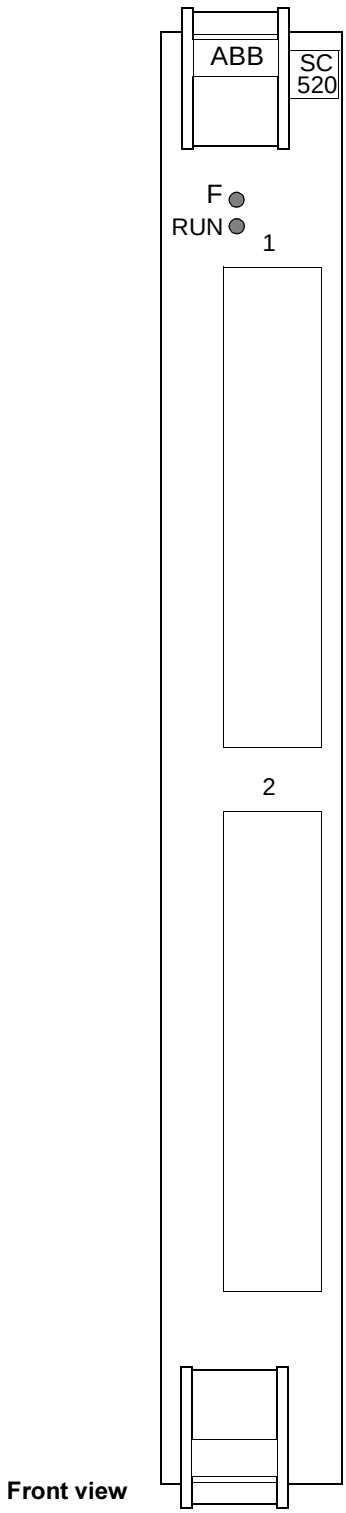

Front view

Description

Three variants of submodule carriers are available to fit into RF533 Series controller subrack.

A submodule carrier has no complete function but two slots for submodules of different kinds to define the desired function.

Communication interfaces are the most common category of submodules. The actual application determines which submodule carrier to use. Design considerations are given in the controller documentation.

The significant differences between available variants are:

SC510 General submodule carrier without slave processor.

SC520 Includes slave processor and protocol to run MasterBus 300 or MasterBus 300E (Submodule CS513 needed),

Technical Data

Indicators

LED RUN (green) on module front. Indicates module running normally.

LED F, Fault (red) on module front.

Power Supply		**SC510SC520**	
5 V d.c.	typical	1.3 A1.5 A	(excl. submodules)
	max.	2.0 A2.0 A	(excl. submodules)
24 V d.c.	typical	6 mA6 mA	(excl. submodules)
Power loss (heat)	typical	0.7 W0.8 W	(excl. submodules)

Mechanical Data

Module size:	12 SU, 6 mp12 SU, 6 mp
Weight:	0.55 kg (1.2 lbs.)0.8 kg (1.8 lbs.) (excl. submodules)

A.15 SD150 - d.c./d.c. Converter

- Power supply unit for d.c. to d.c. conversion
- Applicable to 24 V and 48 V d.c. networks
- Stabilized d.c. output
- Provides galvanic isolation
- Rack or wall installation.

Description

SD150 is a d.c. voltage converter for 24 V and 48 V d.c. networks. It is intended to supply the voltage regulator units in a controller with 24 V d.c. unstabilized voltage. It also provides galvanic isolation between the d.c. network and the d.c. output.

SD150 includes a mains filter, circuits for limitation of power output, protection of input against incorrect polarity and overvoltage protection of the output.
Adjustment controls for output voltage, current limitation and overvoltage protection are located on the front of the unit.

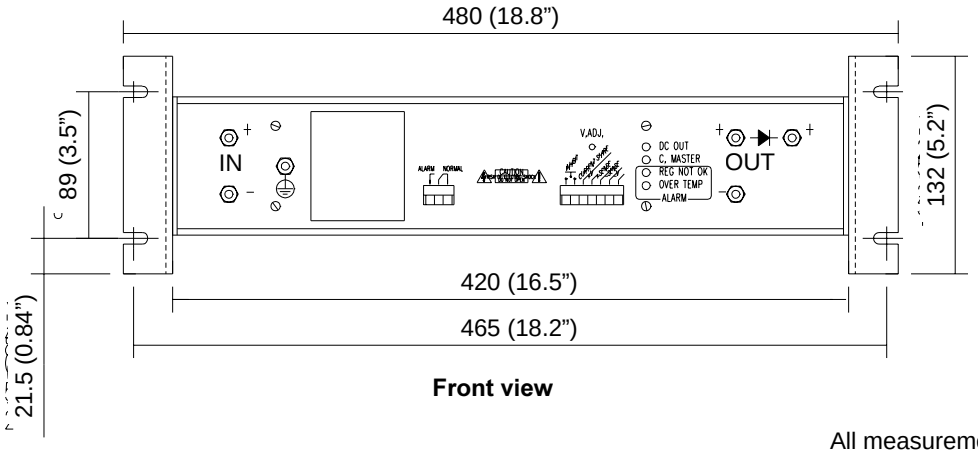

Front view

All measurements in mm (in.)

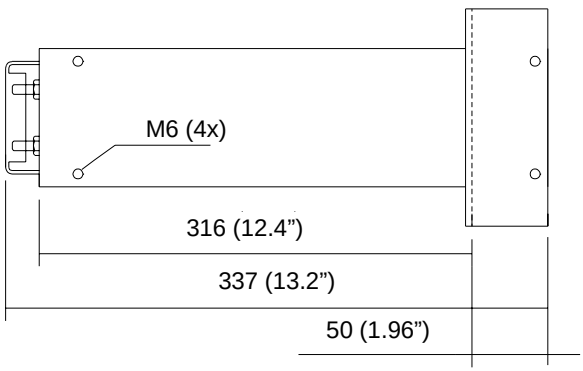

Side view

Technical Data

Table A-6. SD150, Operating Data

Item	Value
Input voltage	24 -48 V d.c.
Input voltage variation	80 - 120% of nominal value
Output voltage	24 V d.c.
Maximum load	20 A
Maximum input power	600 W
Overcurrent protection, output	25 A

Safety Classification

Class I according to IEC 536 (earth protected)

Protection Rating

IP20 according to IEC 529 (IEC 144)

Insulation

Rated insulation voltage 2000 V d.c.
(Input/case or input/output.)

Mechanical Data

Width	480 mm (18.8")
Depth	337 mm (13.2")
Height	132 mm (5.2"), 3 U
Weight	10 kg (22 lbs.)

Block Diagram

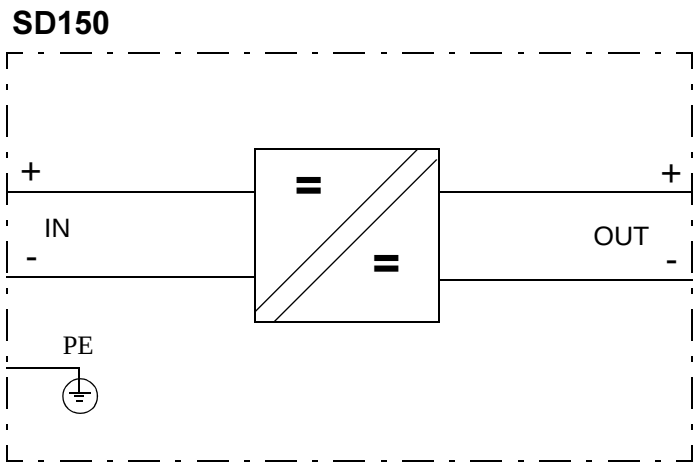

A.16 SR511 - Regulator 24 V/5 V

- Transforming 24 V d.c. to 5 V and 2.1 V d.c.
- Heavy-duty operation, 5 V, 35 A
- Redundancy.

Description

The regulator SR511 is a switch-mode power converter transforming 24 V d.c. to the stabilized voltages 5 V and 2.1 V d.c.
All of these voltages have a common negative terminal.

The SR511 is designed as a plug-in device and is positioned in a controller subrack to interface with the backplane bus.
Use the regulator in equipment where the regulator output terminals are connected in parallel to other regulators of the same family.
Thus, n regulators can share the load giving an arbitrary capacity of power, and where adding an extra regulator to the stack, the (n+1) -redundant power supply system is derived.
In an Advant Controller 450, use two SR511s to achieve redundancy.

You can exchange one regulator at a time in a redundant regulator live system without generating malfunction.

Two 24 V power supply networks with a common negative terminal can connect to the SR511 via the subrack power bus.

The 5 V output is rated 35 A load, exclusive of the current delivered by the 2.1 V output.

Use the 2.1 V output to power the parallel bus termination.

An SR511 includes a supervisory logic circuitry signalling the normal status by closing a semiconductor switch, thereby connecting the signal output terminal to ground via a 100 ohms resistor.
A faulty or missing unit leaves the signal terminal open.

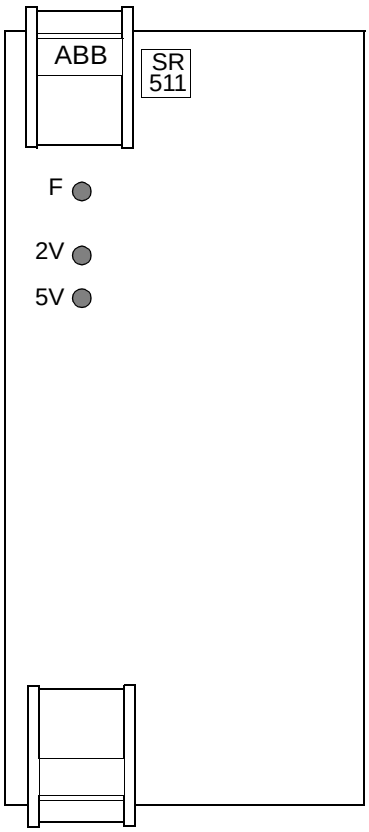

Front view

Technical Data

Indicators

LED F (Fail, red) lights for undervoltage or overvoltage

LED 5 V (green) lights for normal voltage or overvoltage, but not for undervoltage

LED 2 V (green) lights for normal voltage or overvoltage, but not for undervoltage

Input 24 V d.c.

Dual 24 V d.c. inputs

Rated input power	310 W at full load; 5 V, 2.1 V
Maximum input power	350 W at current limit 46 A
Efficiency	70% typ.
Rated input voltage	24 V d.c.
Voltage variation	±8 V
External fuse	30 AF maxfor each 24 V terminal

Output 5 V d.c.

Rated output voltage	5.15 V (adjustable)at 25 A load
Voltage variation	5.3 V max., 5.0 V min.at 0 A and 40 A, respectively
Ripple voltage	10 mV typ.at 40 A load
Load range	1 A - 35 Aexclusive 2 V load
Current limit	43 A ±3 A(inclusive 2V), U_{in} = 24 V
Overvoltage protection	6.3 V electronic
	7 V typ. (6.5 V min.)zener clamp

Output 2 V d.c.

Rated output voltage	2.1 V at 1.5 A load
Voltage variation	2.2 V max., 2.0 V min.at 0 A and 6 A, respectively
Ripple voltage	<10 mV typ.at <8 A load
Rated load current	1.3 A average
Current limit	8 A min. (9.5 A typ.)
Temperature protection	Linearly, decreasing output current at overtemperature

Mechanical Data

Module size: 6 SU, 12 mp ("half height, double width")
Weight: 1.6 kg (3.5 lbs.)

Block Diagram

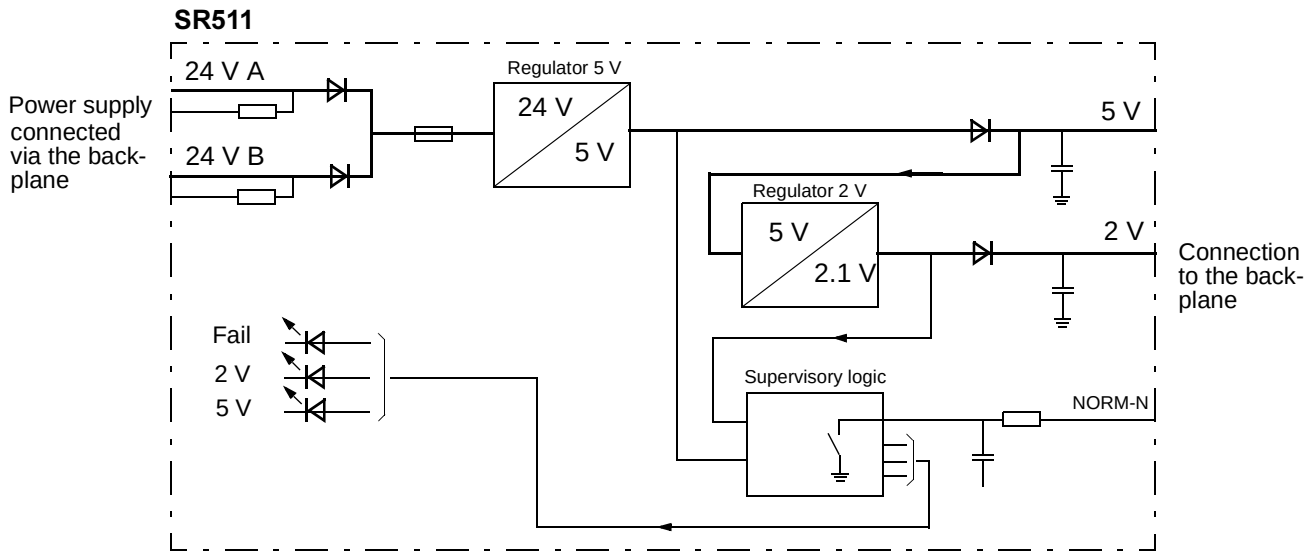

A.17 Power Switch and Distribution Units

Description

Power Switch and Distribution units (PSD units) are modular designs fitting 19-inch rails. A rail houses up to three units.

Use PSD units to switch on/off the mains supply to an Advant Controller installation and for internal power distribution.
Normally the modular box has three socket outlets. The internal connections are made pluggable to the PSD unit.
Some PSD types have extra terminal blocks to permit series connection of additional units and thus expand the number of socket outlets and matching miniature circuit breakers.

PSD units designed to be directly connected to the mains supply are equipped with a main power switch labeled S1. Expansion units lack the switch S1.

PSD units are divided into two categories:

- Main power supply for the Advant Controller
  (for connection to mains A or the redundant mains B, a.c. or d.c.)
- Auxiliary power supply for, for example modems, battery charger, etc.
  (for connection to mains C, a.c. only).

These PSD units are referred to as "main" and "aux," respectively, in Table A-7, under the heading below, **Technical Data**.

Different types of PSD units are available to meet various requirements. See Table A-7.

The figure below represents the generalized appearance of the different types.

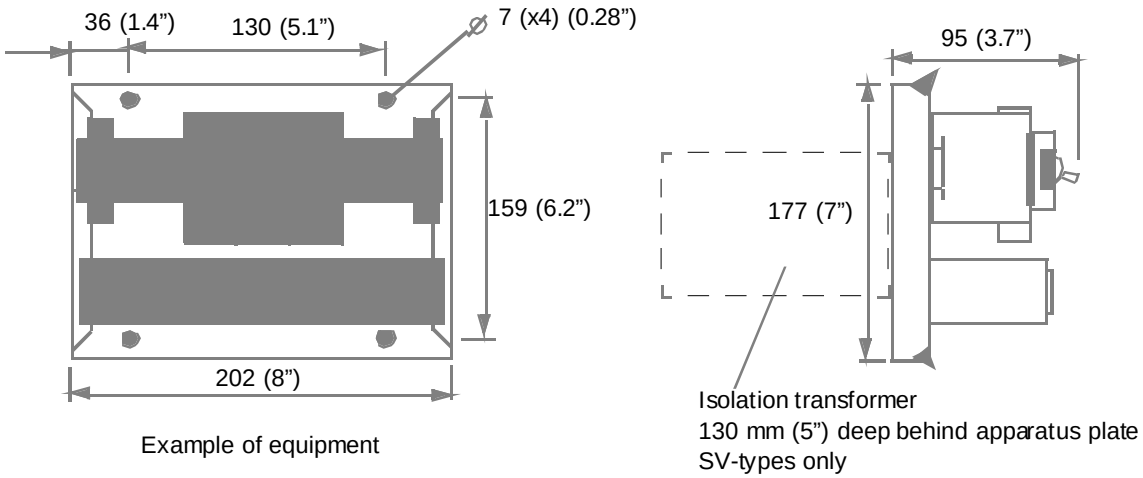

Example of equipment

All measurements in mm (in.)

Technical Data

Technical data for the individual variants available are given in Table A-7.

Table A-7. Individual Technical Data

Parameter		SV540	SV541	SV542	SV543	SX540	SX541	SX542	SX550	SX551	SX555
Category	Supply main/aux	aux	aux	aux	aux	main	main	aux	main	main	main
	Distributor expands.....	--	--	--	--	--	SX540	--	--	SX550	--
	Expandable Y/N	N	N	N	N	Y	Y	N	Y	Y	N
	Mains input	Single	Single	Dual	Dual	Single	Single	Single	Single	Single	Single
Mains PRI	Type of network	any	any	any	any	any	any	TN	any	any	any
	Install. category	III	III	III	III	III	III	II	III	III	III
	Frequency , Hz	50	60	50	60	50/60	50/60	50/60	0	0	0
	Rated insulation voltage, V	250	250	250	250	250	250	250	60	60	30
	Dielectr. test voltage a.c., V	3250	3250	3250	3250	3250	3250	2200	1000	1000	1000
	Rated input voltage, V	230	120	230	120	230/120	230/120	230/120	48	48	24
	Rated input current, A	1.6	3.2	1.6	3.2	35	35	25	80	80	100
	Primary fuse external, A	≤35	≤35	≤35	≤35	≤35	≤35	≤25	≤80	≤80	≤100
	Primary fuse internal, A	Miniature Circuit Breaker, see Block Diag.				--	--	--	--	--	--
	Outlet fuse, A	--	--	--	--	Miniature Circuit Breaker, see Block Diagram					
SEC	Type of network	TN	TN	TN	TN	--	--	--	--	--	--
	Install. category	II	II	II	II	--	--	--	--	--	--
	Rated insulation voltage, V	250	250	250	250	--	--	--	--	--	--
	Dielectr. Test voltage a.c.,V	2200	2200	2200	2200	--	--	--	--	--	--
	Rated output voltage, V	230	120	230	120	--	--	--	--	--	--
	Rated output current, A	1.3	2.5	1.3	2.5	--	--	--	--	--	--
	Outlet fuse	Miniature Circuit Breaker, see Block Diagram									

Note: TN defined by standard EN 60 950. Install category II and III according to IEC 664.

Safety Classification

Class I according to IEC 536 (earth protected)

Protection Rating

IP20 according to IEC 529 (IEC 144)

Mechanical Data

	SX-types	SV-types (including isolation transformer)
Width	202 mm (8")	202 mm (8")
Height	177 mm (7")	177 mm (7") (corresponds to 4 U height modules in a cabinet)
Depth	95 mm (3.7")	95 mm (3.7") + 130 mm (5") at the rear side of the apparatus plate (Hole pattern is given in separate detailed dimension drawing.)
Weight	2.5 kg (5.5 lbs.)	10 kg (22 lbs.)

Block Diagram

SV540, SV541

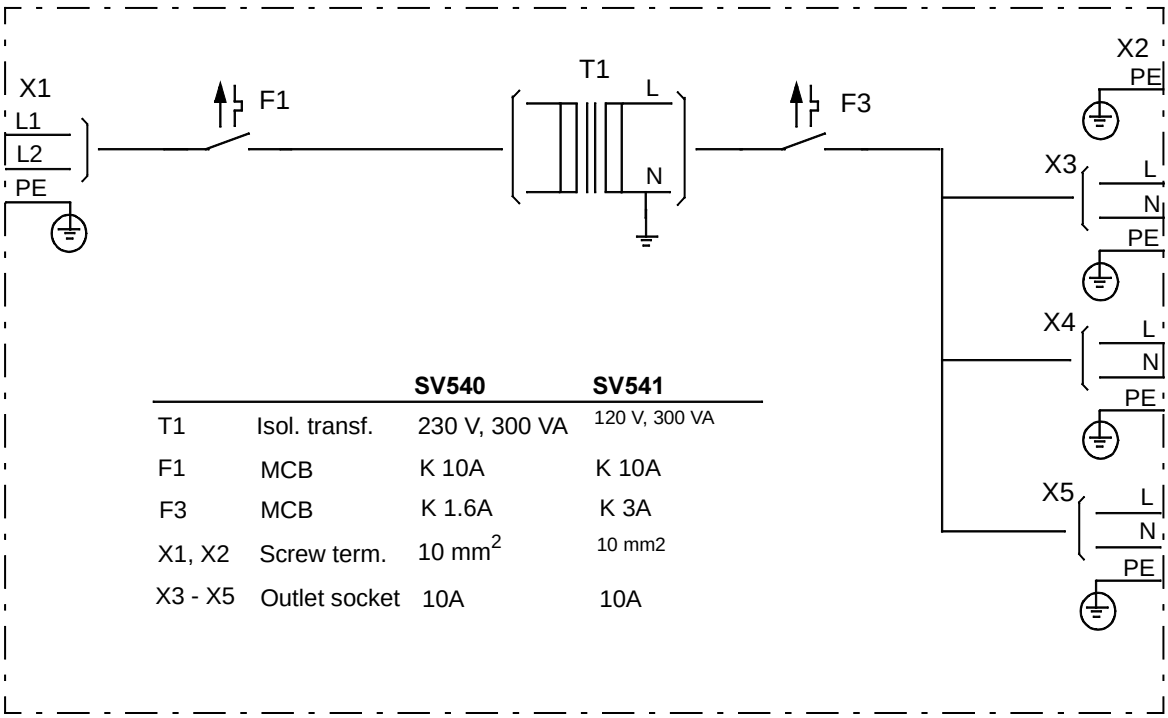

		SV540	SV541
T1	Isol. transf.	230 V, 300 VA	120 V, 300 VA
F1	MCB	K 10A	K 10A
F3	MCB	K 1.6A	K 3A
X1, X2	Screw term.	10 mm^2	10 mm2
X3 - X5	Outlet socket	10A	10A

SV542, SV543

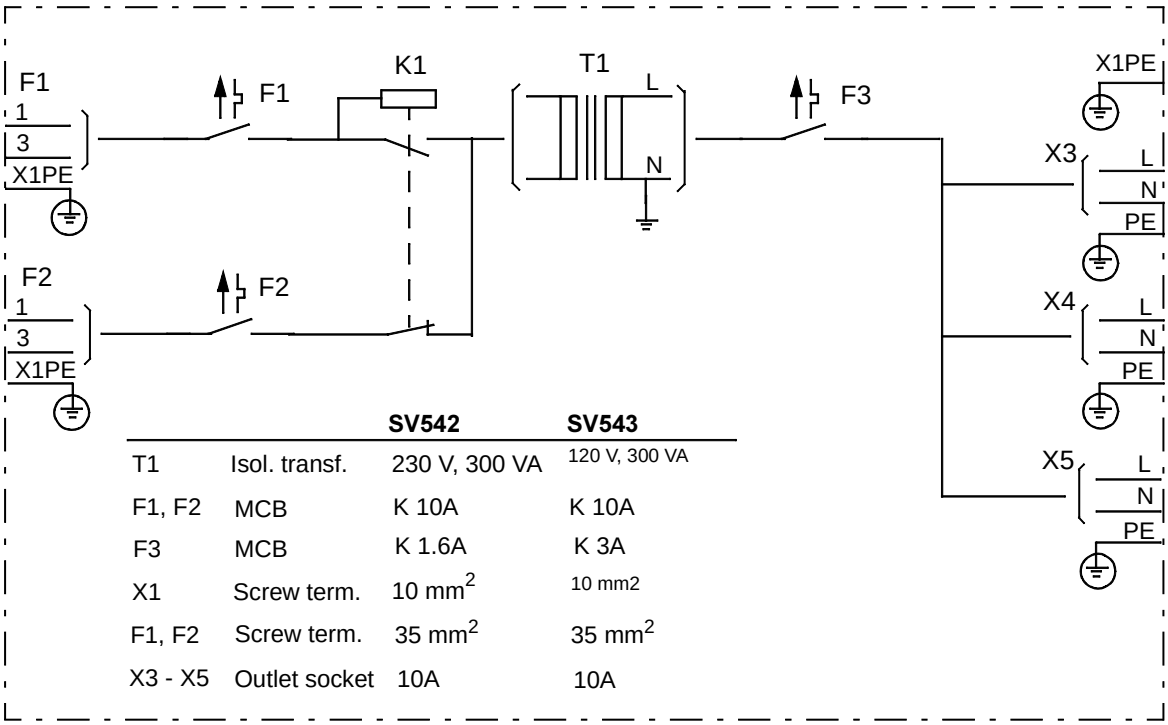

		SV542	SV543
T1	Isol. transf.	230 V, 300 VA	120 V, 300 VA
F1, F2	MCB	K 10A	K 10A
F3	MCB	K 1.6A	K 3A
X1	Screw term.	10 mm^2	10 mm2
F1, F2	Screw term.	35 mm^2	35 mm^2
X3 - X5	Outlet socket	10A	10A

SX542

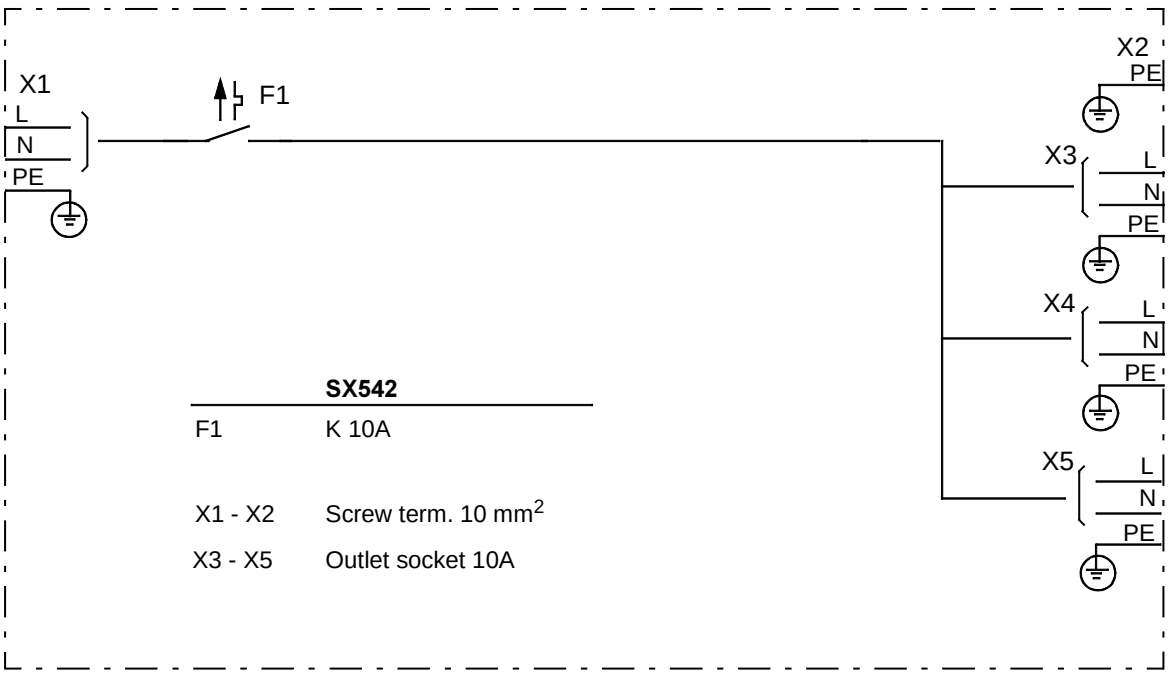

	SX542
F1	K 10A
X1 - X2	Screw term. 10 mm^2
X3 - X5	Outlet socket 10A

SX540, SX550

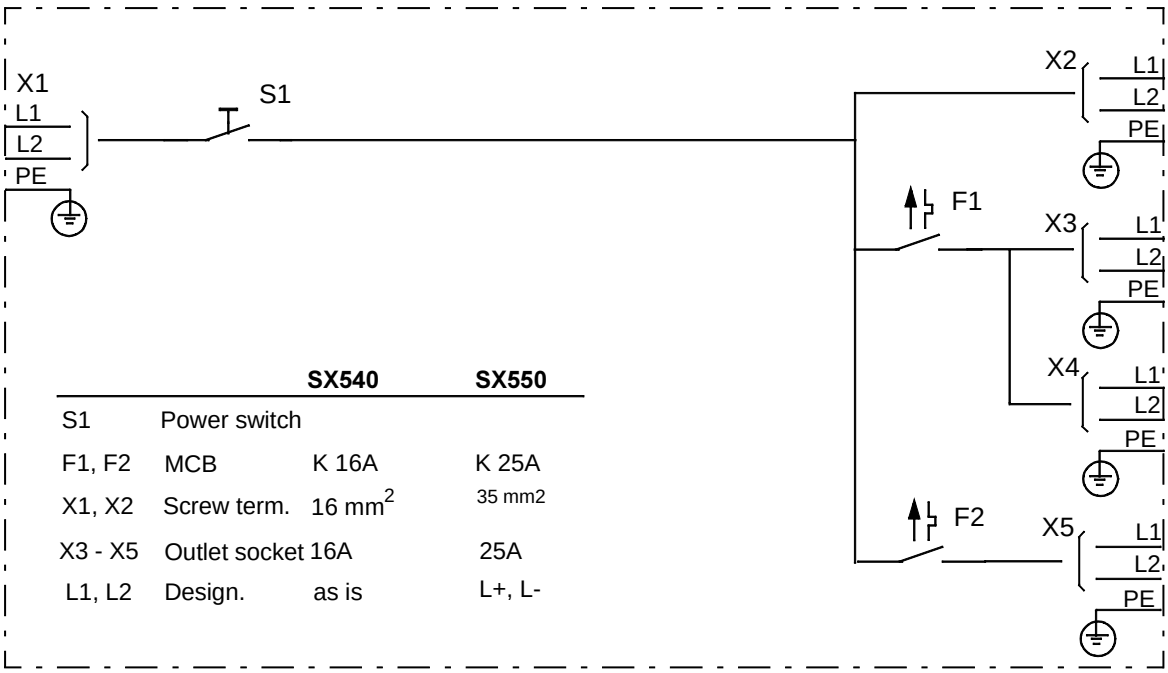

		SX540	SX550
S1	Power switch		
F1, F2	MCB	K 16A	K 25A
X1, X2	Screw term.	16 mm^2	35 mm2
X3 - X5	Outlet socket	16A	25A
L1, L2	Design.	as is	L+, L-

SX541, SX551

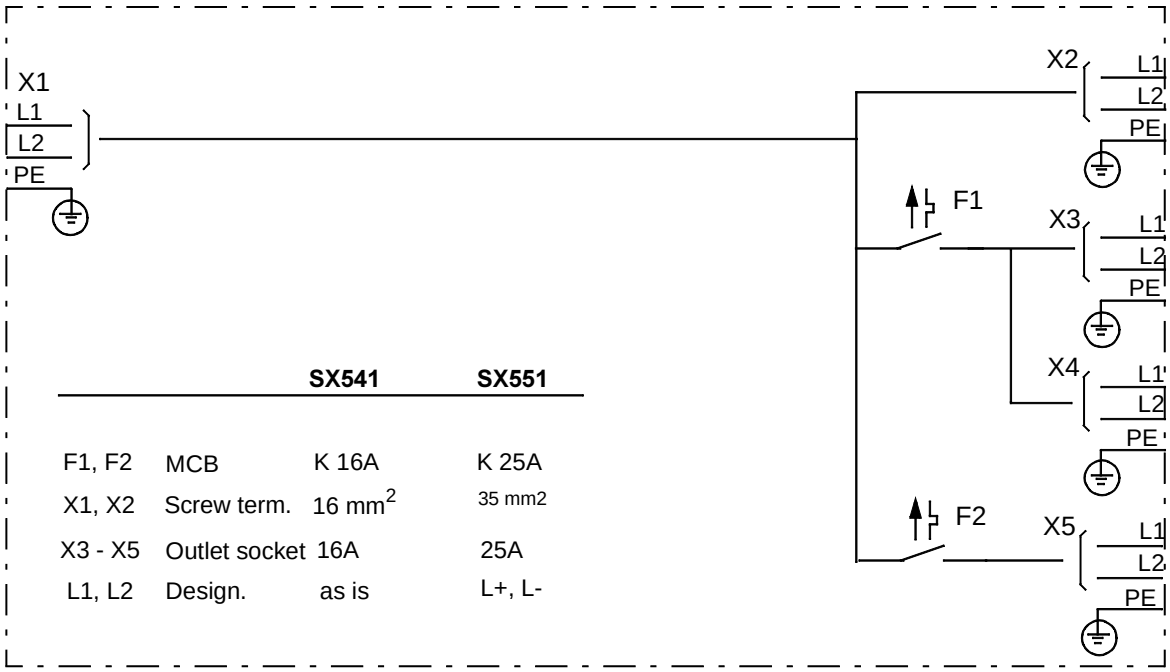

		SX541	SX551
F1, F2	MCB	K 16A	K 25A
X1, X2	Screw term.	16 mm^2	35 mm2
X3 - X5	Outlet socket	16A	25A
L1, L2	Design.	as is	L+, L-

SX555

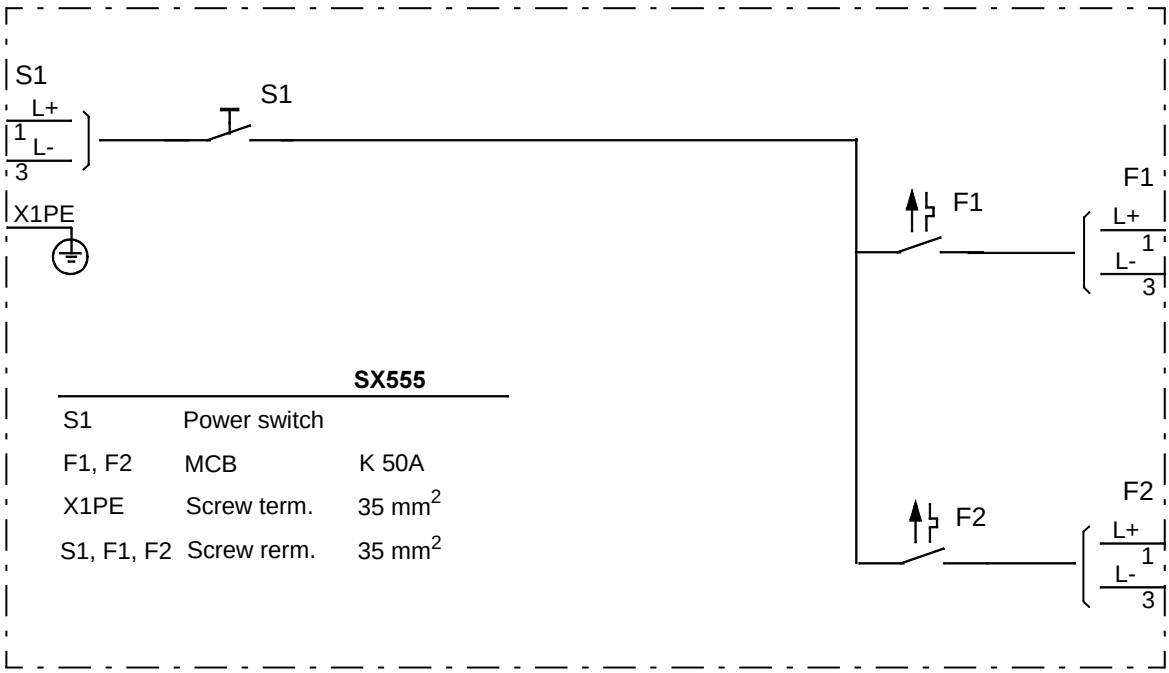

SX555		
S1	Power switch	
F1, F2	MCB	K 50A
X1PE	Screw term.	35 mm^2
S1, F1, F2	Screw rerm.	35 mm^2

A.18 SX554 - Distribution Unit 60 V d.c.

Description

Use the power distribution panel SX554 unit for distribution of 24 V or 48 V d.c. tension within an Advant Controller 410/450.

It mounts right below an SA1xx power supply unit and may be utilized as a support during replacement of a heavy-weight power supply unit.

SX554 is a connector printed circuit board mounted in a steel frame. It has two screw terminals for the power inlet, and one fast-on tab connected to the steel frame (for example, used for grounding a cable shield).

Fast-on tabs are utilized for the unfused power outlets to controller and I/O subracks and for the five two-pole male connectors fused 10A for connection to low-power consumption units like modems, backup battery chargers and field equipment.

The SX554 has an LED indicating a voltage at the power inlet, one outlet X12 which can be used for remote sensing/measuring the input terminal voltage, and a dual fast-on tab outlet fused 1A.

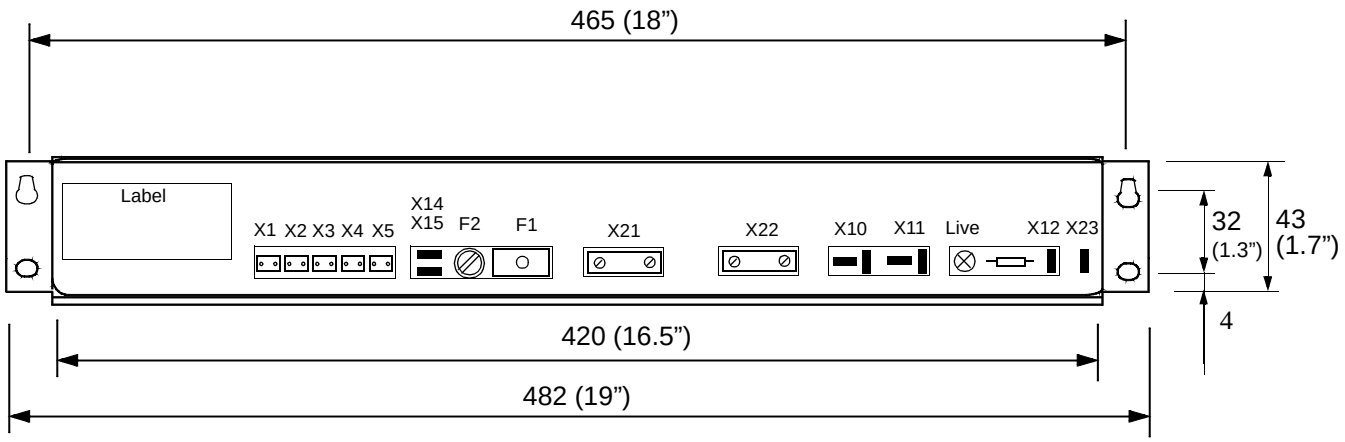

Front view

All measurements in mm (in.)

Technical Data

Indicators

LED LIVE (green) on module front. Indicates a voltage at the power inlet.

Electrical Data

Input voltage:	24 V or 48 V d.c.; variation -20 to +20%
Rated input current:	30 A
External fuse	30AT (slow) max. Short-circuit protection for the equipment.
Installation Category:	II according to IEC 664
Rated insulation voltage:	60 V (Dielectric test voltage 1000 V a.c.)

Fuses

F1 - Thermal overload protection with reset button, 10AT (time lag)
F2 - Miniature Fuse Link, 1AF (fast)

Mechanical Data

Width:	482 mm (19")
Depth:	240 mm (9.4")
Height:	43 mm (1.7"), corresponds to 1 U height module in a cabinet
Weight	1 kg (2.2 lbs.)

Maintenance Parts

Miniature Fuse Link, 5 x 20 mm 1AF ABB part no. 3BSC 770 001 R44

Block Diagram

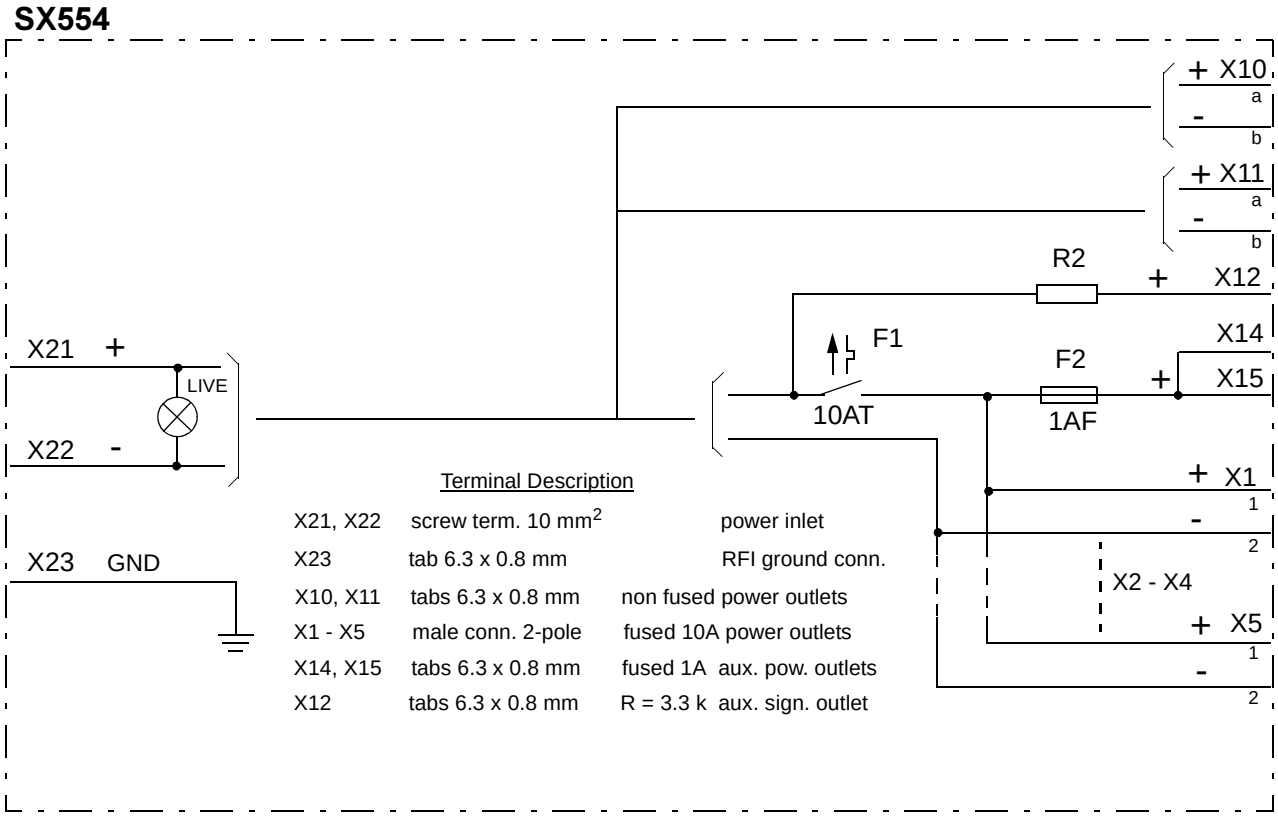

A.19 TC520 - System Status Collector

General status collector

System backplane signal inputs RUN, LIVE, BAT, PFail

Four general-purpose inputs 24 V

One FANFAIL input

One external system clock SYNC input

Two relay outputs controlled by RUN signal (Processor Modules A and B).

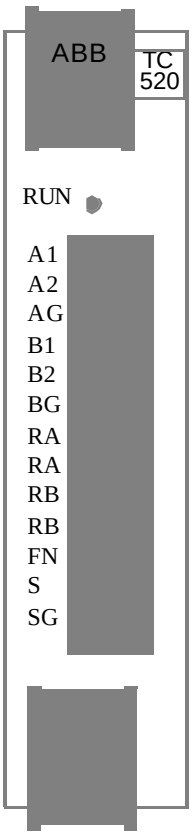

Front view

Description

TC520 is positioned in a controller subrack to interface with the backplane bus.

The module collects status information from around the system. Inputs from the backplane bus of the Advant Controller as well as the module front connector are treated.
The information is then distributed on a transmit-only serial link.
This serial link is available on the backplane to all main CPUs for listening only.

To achieve external synchronization of the Advant Controller system calendar clock, the "minute pulse" is connected to TC520. The signal is separately distributed on the bus backplane to the processor module(s).

The module also makes a RUN-signal controlled relay contact externally available. As long as the RUN-signal is active, the relay contact is closed.

Inputs, except the SYNC input, are filtered digitally by software.

TC520 is totally autonomous, that is, it cannot be affected by an outside user. The status of all inputs is reported, regardless of whether the inputs are connected or not.

The application of the inputs A1, A2, B1, B2 is configured in the controller data base.
Error state with respect to electrical signal level is defined by the application.
See the controller configuration/installation chapters.

For the input FN (FANFAIL), the logic high level 24 V is applied as the error state.

Technical Data

Indicators

LED RUN (green) on module front indicates module running normally.

Table A-8. Electrical Data, Front connected Input/Output Signals

Pin id	Signal name		Signal "0"	Signal "1"	Isolation	Filter Hw/Sw	Pulse length	Trigg flank
	Standard	Applic.						
1, A1	STATUSA1	IO24VA or "F1"	-50 to +2 V	+12 to +60 V	Opto	1ms/100ms	> 100ms	Positive
2, A2	STATUSA2	IO24VB or "F2"						
3, AG	COMMONA (ref. to A1, A2)							
4, B1	STATUSB1	"F3"						
5, B2	STATUSB2	"F4"						
6, BG	COMMONB (ref. to B1, B2)							
7, RA	RUN A1		Relay contact: Max. 250 V a.c. or d.c. Max. 8 A resistive load (For processor module A) Contact opening time max. 8 ms					
8, RA	RUN A2							
9, RB	RUN B1		Relay contact: As above (For processor module B)					
10, RB	RUN B2							
11, FN	FANFAIL		-50 to +2 V	+12 to +60 V	Ref. chassis	1ms/100ms	> 100 ms	Positive
12, S	SYNCIN				Opto	1 ms/ -- ms	> 10 ms	Positive
13, SG	COMM.SYNC							

Power Supply
5 V d.c. typical 5 0 mA
Power loss (heat) typical 0.25 W

Mechanical Data
Module size: 6 SU, 6 mp ("half height")
Weight: 0.23 kg (0.5 lbs.)

Block Diagram

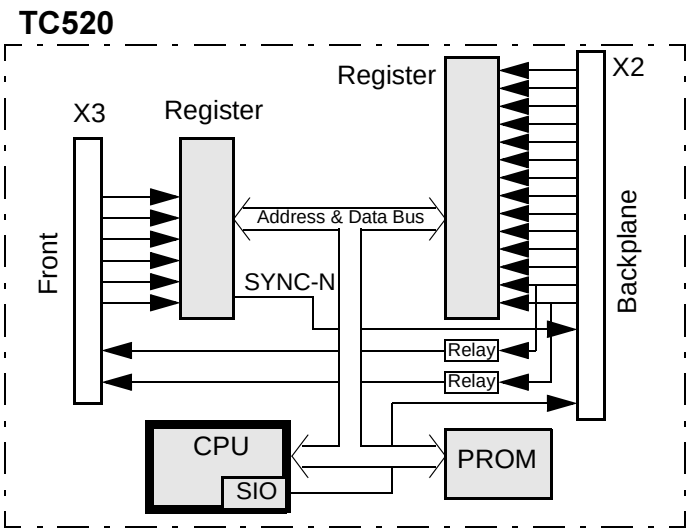

Appendix B RM500 Cabinet - Data Sheet

B.1 RM500 Cabinets - General

The RM500 cabinet (available in three protection classes) is used for installation of Advant Controller 400 Series in control rooms. Two protection classes are ventilated, and complies with IEC 529 protection class IP 21, and IP41. The third protection class has no ventilation and complies with IEC 529 IP54. See Table B-3 and Table B-4.

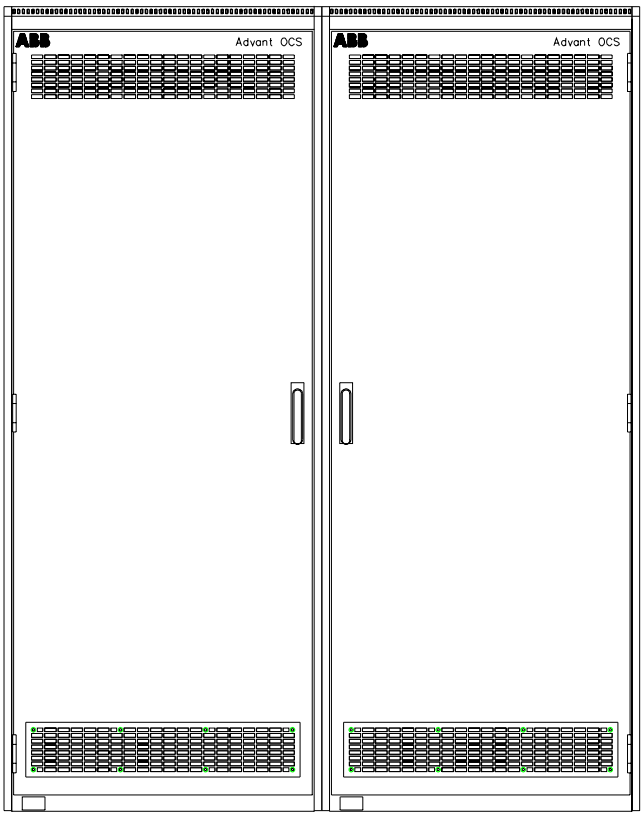

Figure B-1. RM500 Cabinet - Front View

The cabinets are delivered in a light grey RAL 7035 Structure color.

Two versions - RM500V1 and RM500V2 - with different dimensions are available (see Table B-1).

RM500V1 cabinets are provided with a single or a double door (two doors, each half the size of a single door). See Figure B-3.

All frame components are made of alu-zinc-coated steel and the welded parts are electro-galvanized.

A grounding point (an M10 screw) is located towards the front of the cabinet in the bottom left hand corner.

B.2 Dimensions and Weight

The dimension and weight of the RM500 cabinets are given in Table B-1.

Table B-1. RM500 Cabinet Measurements

Characteristics	Cabinet Type		
	RM500V1 Height = 1925 mm (75.8 inch.)	**RM500V1 Height = 2125 mm (83.7 inch.)**	**RM500V2 Height = 2225 mm (87.6 inch)**
Dimensions			
Cabinet(1) WxDxH	800x512x1925 mm (31.5x20.2x75.8 inch.)	800x512x2125 mm (31.5x20.2x83.7 inch.)	700x637x2225 mm (27.6x25.1x87.6 inch.)
End Panel(2) W1xD1	20x530 mm (0.8x20.9 inch.)	20x530 mm (0.8x20.9 inch.)	20x655 mm (0.8x25.8 inch.)
Cable Entry W2xD2	660x311 mm (26.0x12.2 inch.)	660x311 mm (26.0x12.2 inch.)	560x436 mm (22.0x17.2 inch.)
Weight(3)	150-200 kg (330-440 lbs)	150-200 kg (330-440 lbs)	150-200 kg (330-440 lbs)
Doors	Single/Double	Single/Double	Single
Mounting Planes	19"/24"	19"/24"	19"
U-Modules(4) Cabinet/Hinged Frame	39U/37U	43U/41U	45U/43U
Swing Radius(5)			
Single Door (SD)	793 mm (31.2 inch.)	793 mm (31.2 inch)	693 mm (27.3 inch.)
Double Door (DD)	415 mm (16.3 inch.)	415 mm (16.3 inch.)	-
Subrack (S100 I/O) in Hinged Frame (SR)	600 mm (23.6 inch.)	600 mm (23.6 inch.)	600 mm (23.6 inch.)

(1) The dimensions includes door and rear plate.
(2) W1xD1 shows the dimension for a single end panel. When mounting two end panels to a cabinet add 2x20 mm at the cabinet width, W but use D1 as cabinet depth.
(3) The weight does not include equipment to be installed within the cabinet.
(4) U-Modules, see Appendix D, Item Designations.
(5) The space required for door(s) and the hinged frame. See Figure B-3.

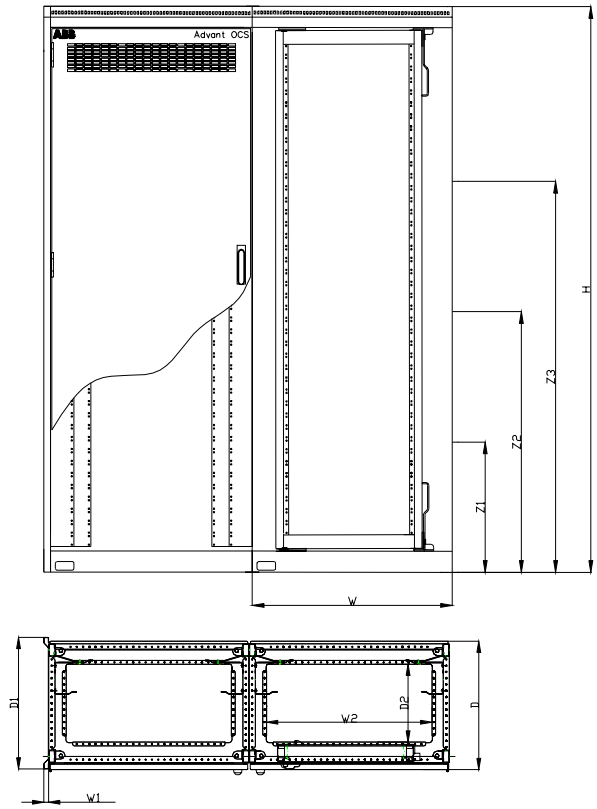

Figure B-2. Mounting Cabinets together - Screw Position

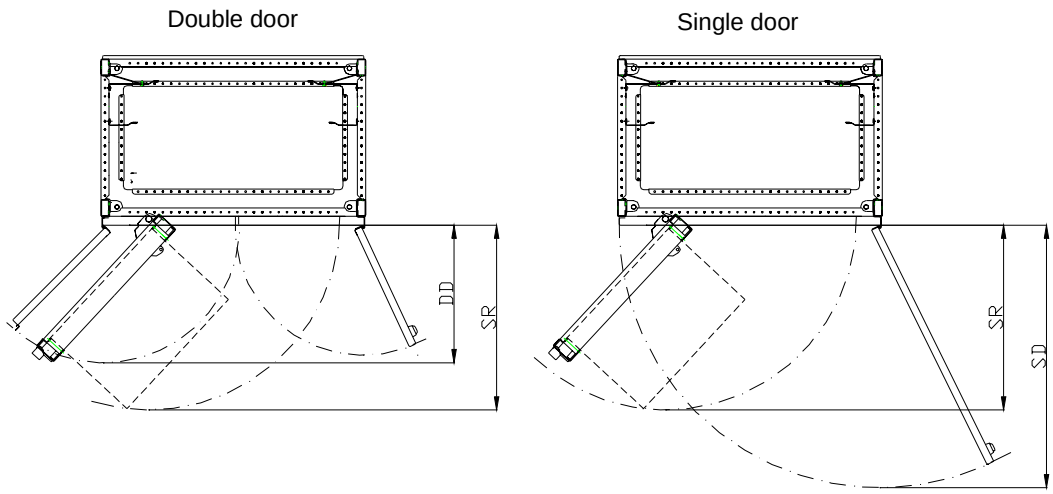

Figure B-3. Swing Radius for Door(s) and Hinged Frame

B.3 Mounting Cabinets together

If cabinets are to be mounted to each other use the included screw/bolt kit. The four M8 screws, with washers and nuts, in the angle hinges and six M6 screws at about Z1=500, Z2=1.000, Z3=1.500 mm height from the floor, see Figure B-2. Tighten the M8 screws to 20 Nm maximum and the M6 screws to 10 Nm maximum.

B.4 Mounting Cabinets to the Floor

When fixing the cabinet to the floor use four or six M12 screws where Figure B-4 indicates, one at each corner in the first left hand cabinet in a row of cabinets and screw the following cabinets with two screws each at the right hand side. The bottom angle hinges features holes, 14 mm (0.6") in diameter. These holes permit you to adjust the cabinet location after holes are drilled in the floor. If drilling is necessary, make sure that no dust or other foreign matter enters the equipment in the cabinet. Please notice the minimum distances from cabinet to walls and ceiling (see Section 2.1.12, Weight and Mounting Dimensions and Figure 2-6). Use washers between the floor and the cabinet bottom to level the cabinet floor into a horizontal position.

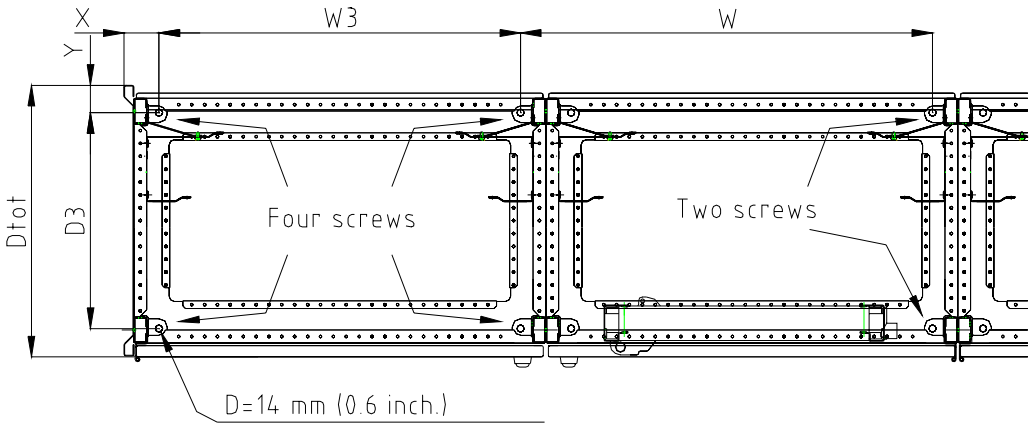

Figure B-4. Position of the Holes for fixing the Cabinet(s) to the Floor

Table B-2. Distances in Figure B-4

Symbol in Figure B-4	RM500V1	RM500V2
X	69 mm (2.7")	69 mm (2.7")
W3	702 mm (27.6")	602 mm (23.7)
W	800 mm (31.5")	700 mm (27.6")
Y	56 mm (2.2")	56 mm (2.2")

Table B-2. Distances in Figure B-4

Symbol in Figure B-4	RM500V1	RM500V2
D3	419 mm (16.5")	544 mm (21.4")
Dtot	531 mm (20.9")	655 mm (25.8")

B.5 Protection Rating

Cabinets are available for different environmental protection classes, see Table B-3.

Table B-3. RM500 cabinet protection classes

Type	Protection class
	RM500
Ventilated, **not** EMC-proof (1) (2)	IP 21
Ventilated, EMC-proof (2)	IP 21
Ventilated (3)	IP 41
Sealed	IP 54
Sealed with heat exchanger (4)	IP 54

(1) Advant Controller 450 with S100 I/O, installed in this cabinet is **not** verified for CE-marking.
(2) Standard cabinet without filter on ventilation grilles.
(3) Ventilation grilles are covered with metallic net to prevent insects to enter the cabinet. A heater is included to heat the cabinet when the controller is not in use.
(4) Available as a standard sealed cabinet with heat exchanger as an option.

Table B-4. Available Degree of Protection Ratings for RM500

	RM500V1 H=1925 mm (75.8 inch.)			RM500V1 H=2125 mm (83.7 inch)			RM500V2 H=2225 mm (87.6 inch.)		
	IP21	IP41(1)	IP54	IP21	IP41(1)	IP54	IP21	IP41(1)	IP54
Cabinet with or without hinged frame	X	X	X	X	X	X	X	X	X
Cabinet for OOCU	X	X	X	X	X	X			
Cabinet, NOT verified for CE marking	X			X			X		

(1) IP41 includes a heating element, and the ventilation grilles are covered with nets.

B.6 Permitted Power Dissipation

The permitted power dissipation in a single RM500 cabinet is given in Table B-5 If required, due to environmental conditions, use Protection Class IP54.

Table B-5. Permitted Power Dissipation for RM500

Protection Class	15° C Temperature Rise	30° C Temperature Rise
IP21	700 W	1.400 W
IP41	500 W	1.000W
IP54	300 W	600 W

The CPU subrack is provided with a fan unit to equalize the temperature difference in the subrack.

Appendix C Delivery Documentation

C.1 Delivery Binder Content

As a complement to the user documentation, there is a binder which contains other pertinent documentation related to the delivery. This pertinent documentation is referred to as the **Delivery Binder**.

The Delivery Binder has the same content structure for all Advant products.

The Delivery Binder includes the following documents:

Order Reference Sheet
A document which contains the ABB order reference number. This number serves as the basis for all subsequent references to this delivery.

Delivered Version Specification
A document which contains the general system release information.

System Log
This is a series of blank forms suitable for logging hardware and software repairs, modifications or expansions of the product. These forms are used by the service engineers in the initial commissioning as well as by customers after delivery from ABB.

Delivery Specification
The information in this document specifies all parts of value which are included in the initial delivery (the actual List of Apparatus).
When subsequent changes to the product occur, the list of new parts is included here, too.

License Certificate
This certificate is the end user's evidence that he has purchased the right to use the specified (software) products. The document contains the end user name and a list of the particular software packages under license, as well as a list of our standard terms and conditions.

Inspection and Test Record
This document, filled in by the production department, specifies which test specifications and delivery test procedures the equipment has been subject to.

Release Notes
Latest product information which is not covered by the standard user documentation.

Terminal Diagram
A block diagram where all hardware modules (circuit boards and units) are represented by functional symbols and where all interconnections between the modules are shown.
The diagram is mainly used at installation, commissioning and system maintenance (fault finding).

Support and Problem Reporting
Includes information and instructions on how to get support from ABB and how to report problems with the product and its functions. Forms are available for problem reporting.

Appendix D Item Designations

D.1 General

To use the documents provided at delivery, you must be familiar with the item designation system used in Advant Controller cabinets.
Each component in the system has a unique designation which indicates exactly the location of the component in the cabinet. This designation consists of a letter followed by a numerical combination. The letter specifies the mounting plane, and the numbers designate the level in the cabinet and the position in the cabinet.

This description applies to cabinet type RM500 and Advant Controller 400 Series.

D.2 Cabinet

Mounting planes in cabinets are designated as shown in Figure D-1..

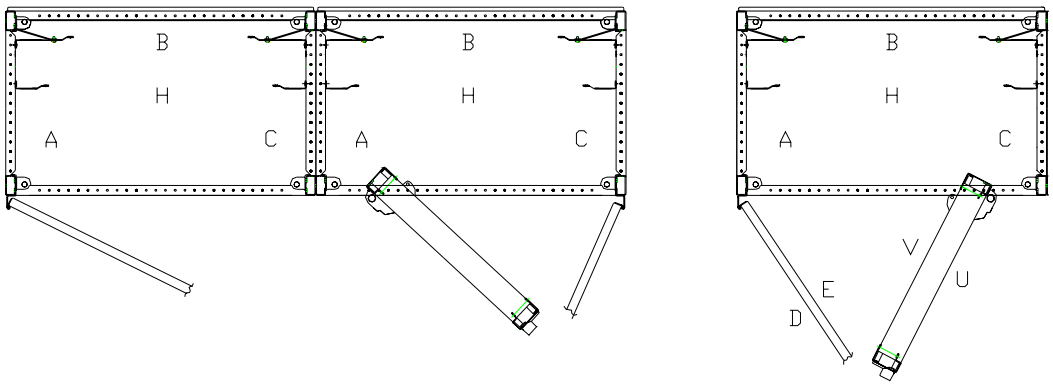

Figure D-1. Item Designation of Mounting Planes

A = left-hand side of cabinet

B = rear mounting plane, 19”

C = right-hand side of cabinet

D = front of door

E = rear of door

F = optional location, free

H = extra mounting plane in front of B, 24”

T = ceiling location

U = front of hinged frame, 19”

V = rear of hinged frame, 19”.

When there are several cabinets, they are designated 1 and 2 from the left.
The mounting planes are for example 1B, 2B and so on.

All mounting planes A, B, C, D, E, H, V (hinged frame) and U (hinged frame) are divided vertically into height modules (U), 1U = 44.45 mm (see Figure D-1).

Mounting planes B, U and V are for 19" units and H is for 24" units.

The mounting planes A and C have a horizontal partition of 25 mm. They are numbered 1, 2, 3 and so on from the rear and forward (see Figure D-1).

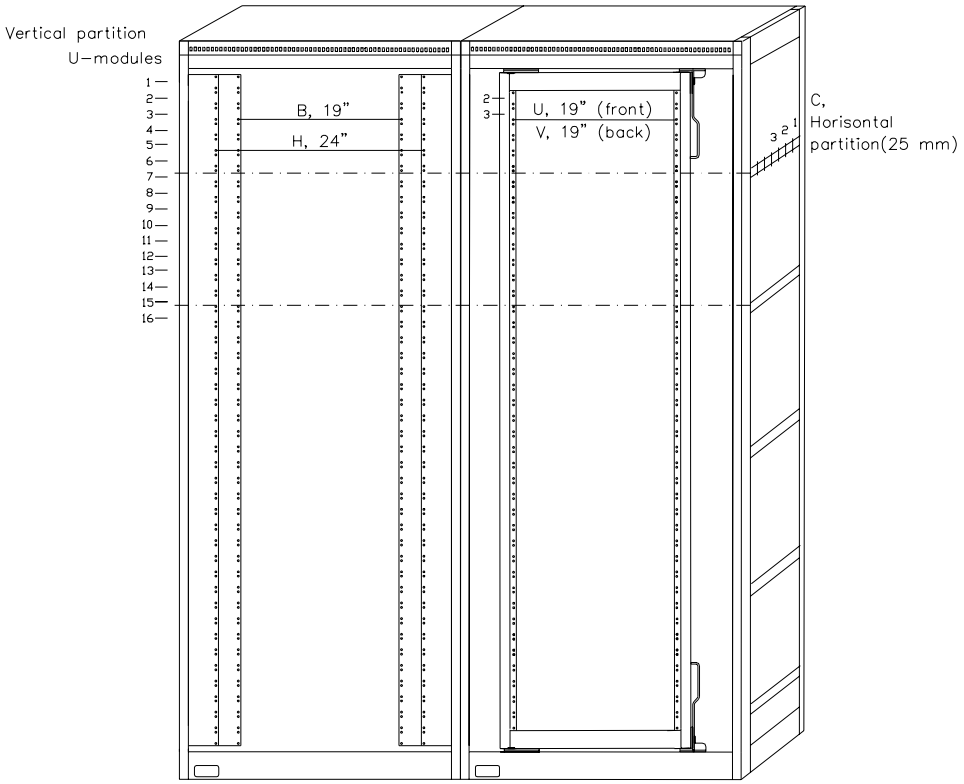

Figure D-2. Cabinet with Door Removed

The levels specified are those of the upper left-hand corners of the units installed.

The cabinet is designated with a letter combination followed by figures. The + sign prefix indicates that the designation is location-oriented.

D.3 Controller Subracks

The controller subracks are 12 and 18 SU modules high (1 SU = 25 mm) and 85 mp modules wide (1 mp = 5 mm).

Subracks have 14 slots for modules, center-center spacing 6 mp (general design). Variants of module height and width exist (6 mp and 12 mp).
The disposition of the subracks in terms of number of relevant modules are specified in the respective product documentation.

Location-Oriented Item Designations

The first module in a controller subrack is designated 102, the next 108, and so on.

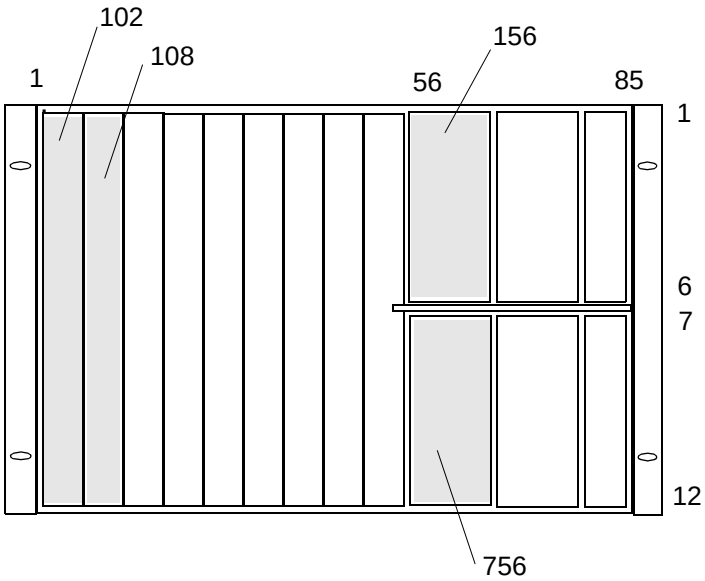

Please note!
The given location-oriented item designation should not be mixed up with the module item designation in the computer infrastructure (address) where the positions are designated from the left 1, 2, 3, and so on.
See Figure D-5

Figure D-3. Item Designation in Controller Subrack 12 SU

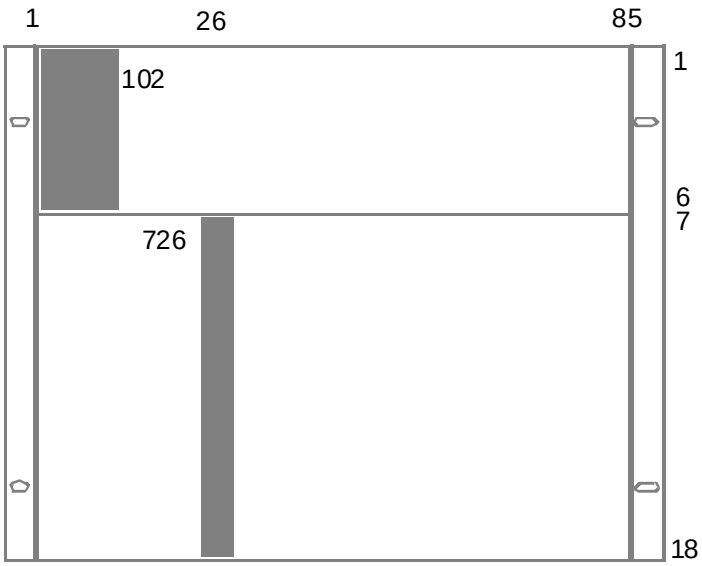

Figure D-4. Item Designation in Controller Subrack 18SU

Address

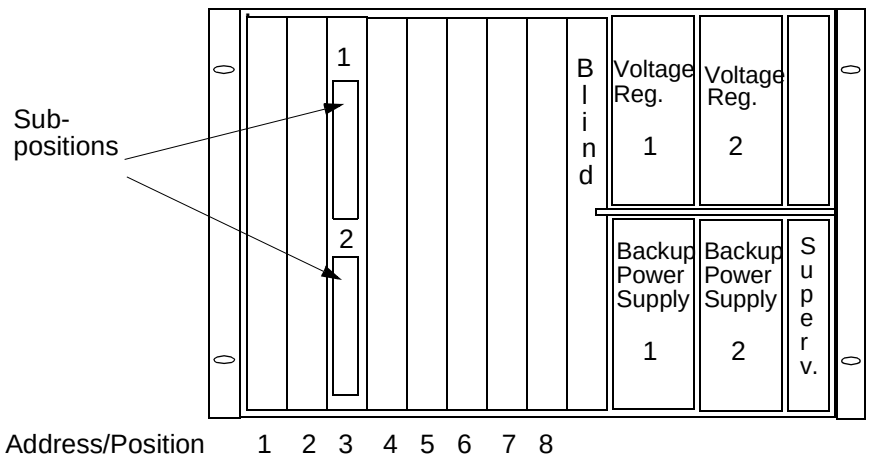

Figure D-5. Addresses in Controller Subrack 12 SU

D.4 I/O Subracks

The I/O subracks are 8 (U) modules high (1 U = 44.45 mm), including cable duct.

Subracks have 21 slots for modules.
The first module in a subrack is designated 101, the next 105, the next 109, and so on.
See Figure D-6.

The item designation of the modules gives their location in the subrack. The module marked in the figure is at module location 25. The 1 in the designation refers to the uppermost level, level 1 in the equipment frame.

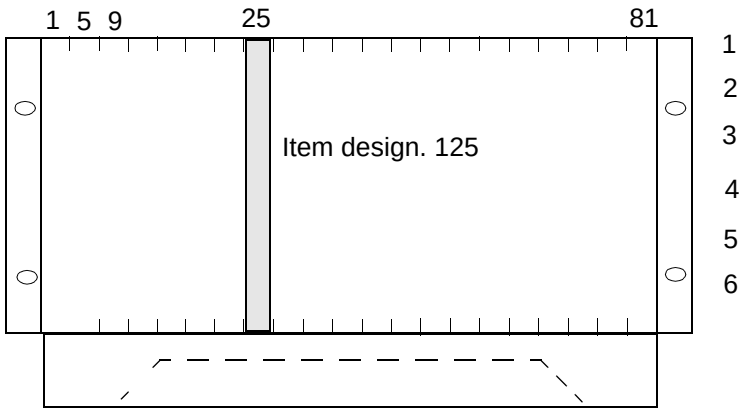

Figure D-6. Item Designation in I/O Subrack

D.5 Modem Subracks

The modem subracks are 6 (U) modules high (1 U = 44.45 mm), including cable duct.

Two wide variants are available, 19 inches and 24 inches.

The places in the subrack for modems have sequential numbers 1 - 9 and 1 - 12. Places 10, 11 and 13, 14 are contacts for power supply distribution (24 V).

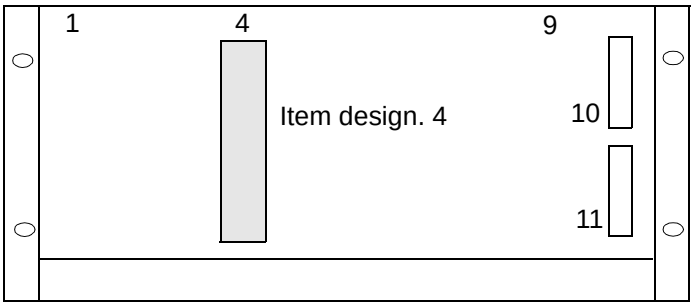

Figure D-7. Item Designation in Modem Subrack, 19 inches

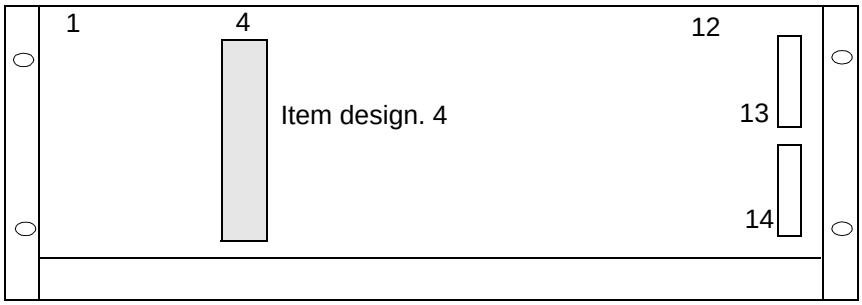

Figure D-8. Item Designation in Modem Subrack, 24 inches

Modems mounted on a bracket are numbered 1 and 2 as in Figure D-9.

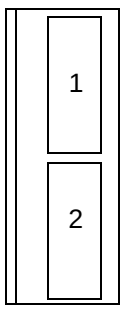

Figure D-9. Modem Mounted on a Bracket

D.6 Circuit Boards and Units

Connectors on the Front

Connectors on the front are numbered X1, X2, and so on, from the top downward. With several circuit boards in a unit, the boards are designated 1, 2, 3, and so on, and the connectors on the different boards are designated X21, X22, X31, and so on.

Other plug-in circuit boards in the front of the units have sequential numbers 1, 2, 3, and so on.

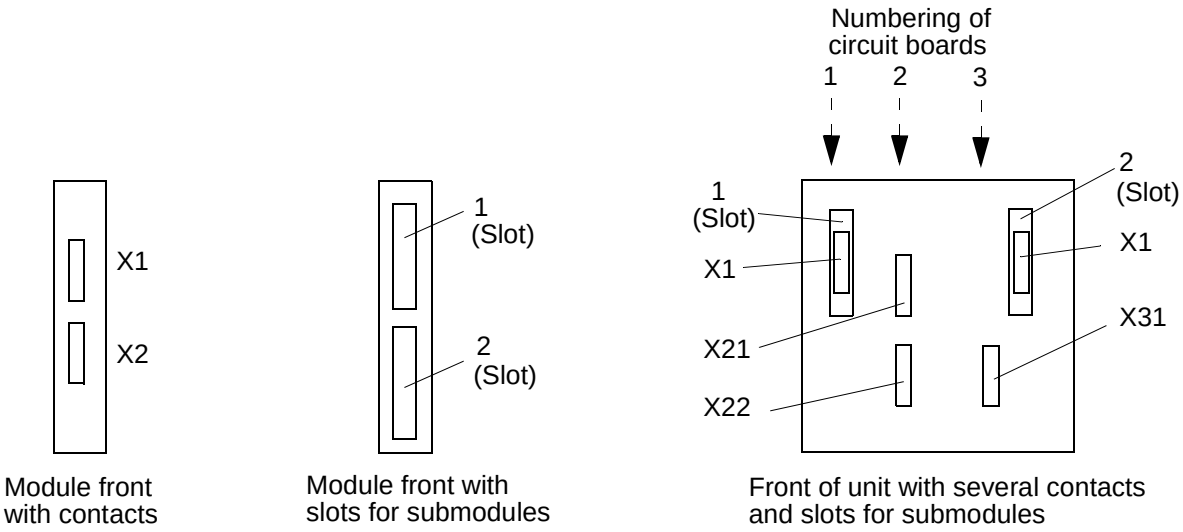

Figure D-10. Numbering of Submodules and Connectors on the Front

Connectors on the Rear Side

Connectors are numbered X1, X2, and so on, from the top downward.

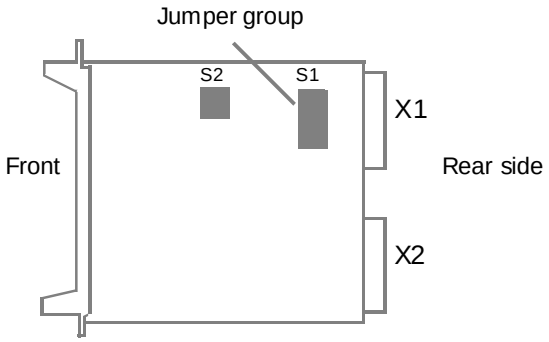

Figure D-11. Numbering of Connectors on the Rear Side

Connection Units

The item designation code for the contacts of the connection unit are shown in Figure D-12.
The connector for internal connections in the cabinet is always designated X80.
The terminal block group or connector for external connections is designated X90.
If there are more connectors, these are designated X81, X82, or X91, X92, and so on.

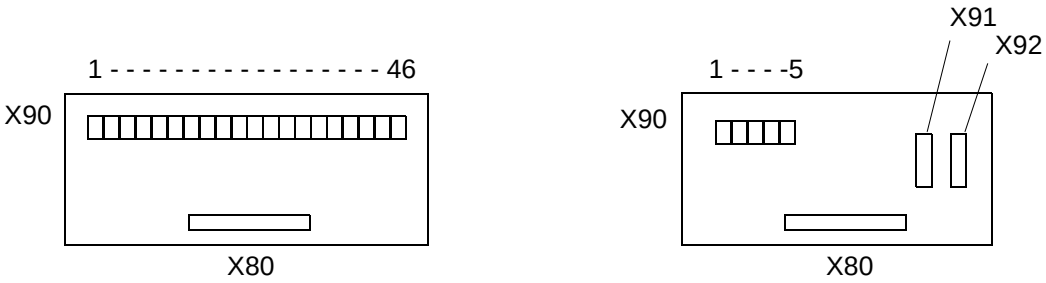

Figure D-12. Connection Units, Connection and Terminal Numbering

When more than one connection unit is mounted on the same mounting bar, the units are numbered as follows:
The mounting bar for connection units is divided in width modules à 20mm, which is a multiple of the standard connection unit width.

19 inch 24-width modules

24 inch 30-width modules

The item designation specified for a connection unit is that module number covered by the upper left-hand corner of the unit installed.

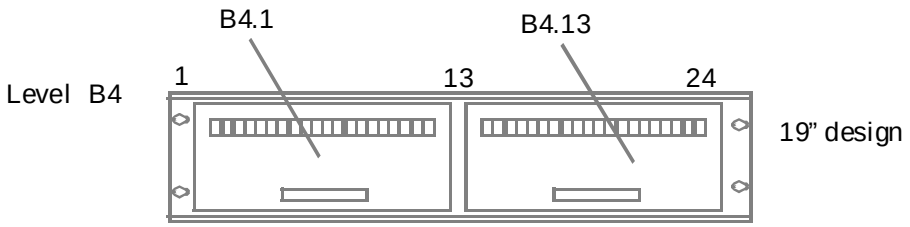

Figure D-13. Location of Connection Units on a Mounting Bar

Figure D-14 shows a typical connection between connection unit B1.1 and I/O board U4.125.
The item designation of the board gives its location in the subrack.

This connection is designated U4.125.X2 - B1.1.X80.

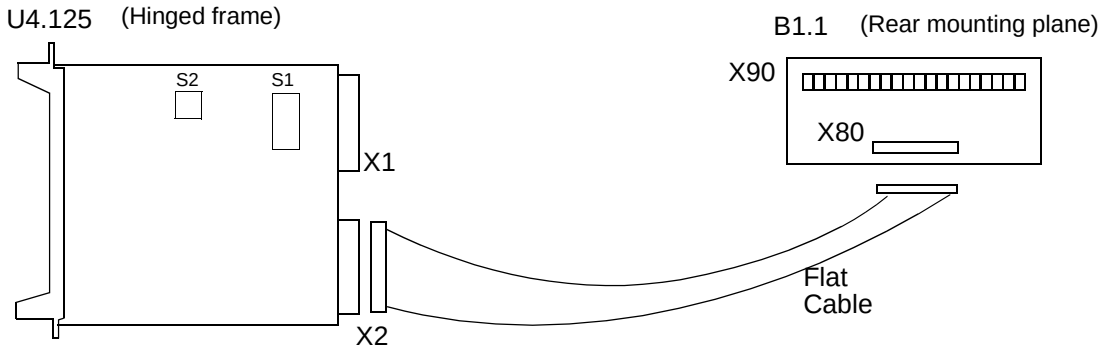

Figure D-14. Typical Internal Connection

The poles of the connection terminal block on the connection unit are numbered from left to right, see Figure D-15. The code for a process connection to pole 3 becomes B1.1.X90:3.

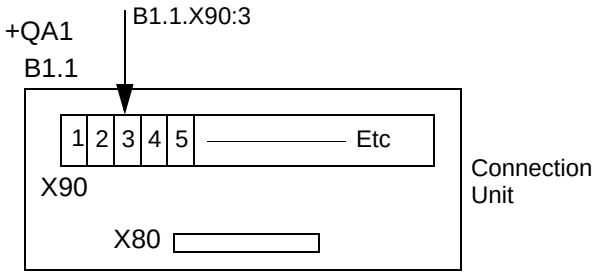

Figure D-15. Terminal Block Numbering

D.7 Mains Units



Figure D-16. Location of Mains Units

The mounting plates can carry two or three mains units. The mains units are numbered 1, 2, 3, as in the figure. The mounting plates are 3 U high.

D.8 Examples of Item Designation in Cabinets

A number of modules, connection points, and so on, located in a double cabinet are illustrated in Figure D-17.

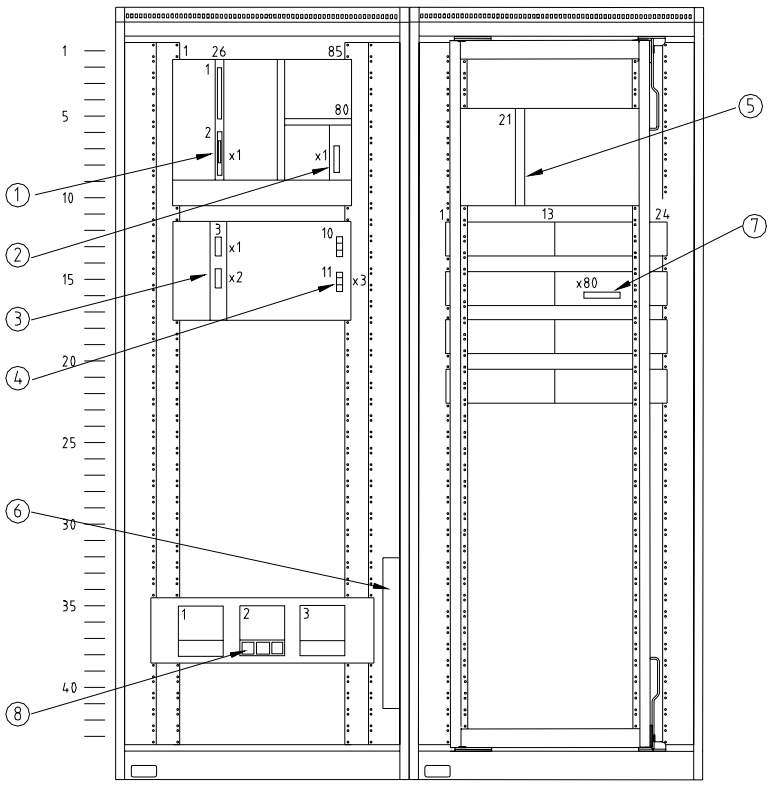

Figure D-17. Example of general Disposition of a Double Cabinet

An extract from a wiring table, Table D-1, shows the corresponding item designations,

Table D-1. Designation of Items in Figure D-17

No.	Instar.	Connection point A				
		Item designation				Terminal
	1		1B2	126	2	X1
	2		1B2	780	X1	
	3		1B12	3	X2	
	4		1B12	11	X3	
	5		2U5	121		
	6		1C32.**x**(1)		X1	
	7		2H15	13	X80	
	8		1H35	2	F1X3	

(1) **x** stands for 1, 2, 3 and so on.

Appendix E Current Consumption and Heat Dissipation

E.1 General

The tables below present the current consumption and power dissipation of all relevant hardware modules included in Advant Controller 450 and its I/O.

Use this information:

- When dimensioning the supply to the system
- When calculating the heat generated in RM500 cabinet.

The values given in the tables are typical and adapted to these kind of applications.

It is assumed that 70 percent of the channels on a board are active simultaneously.

Use the tables as forms in your own calculation.

E.2 Calculation Algorithms and Forms with Technical Data

Current Consumption

When calculating the current consumption, focus on current per power supply unit. Consider the available capacity given in Section 3.1.3, Power Supply.

Obtain the current consumption with 24 V, I_{tot}, in the following way:

$$I_{tot} = I_{24V} + 0.37 \times I_{5V}$$

where I_{24V} = current consumption 24 V, obtained from the tables.
I_{5V} = current consumption 5 V, obtained from the tables.
0.37 = conversion factor.

Heat Dissipation

When calculating heat dissipation, focus on heat per cabinet.
Consider the permitted power dissipation given in Section 3.1.10, Heat Dissipation.

The total power dissipated in the cabinet can be written:

$$P_{Total} = (\sum P_{C-module}) + (\sum P_{IO-board}) + (\sum P_{Voltagesupplyunit}) + (\sum P_{Sundry})$$

Table E-1. Current Consumption and Power Dissipation, Controller Modules

Type Designation	Current Consump. (A)		Tot. Power Dissipation (W)	Comments	No of Boards	Total I_{tot}, P_{tot}
	5 V	24 V				
CI522A	0.6	-	3.3			
CI531	0.4	0.04	3			
CI532Vxx	0.4	0.04	3			
CI534Vxx	0.4	0.04	3			
CI535	0.4	0.04	3			
CI538	0.4	0.04	3			
CI541V1	0.85	0.25	11			
CI543	0.6	0.25	9 (1)			
CI570	0.9	-	5			
CI572	0.35	-	1.75			
CI573	0.35	-	1.75			
CS513	0.25	0.25	8			
MB510	0.01		0.05			
PM511	4.9	0.2	25			
PU535	0.4	0.04	3			
SB510	-	-	20	Approx.		
SB511	-	-	20	Approx.		
SC510	1.3	0.006	0.7			
SC520	1.5	0.006	0.8			
SR511	-	-	100	Approx.	(2)	
TC520	0.05	-	0.25			
					Sum	

(1) 6 W dissipated in the transceiver connected to the module.
(2) Do not include redundant power supply units in the calculation of number of boards/units.

Table E-2. Current Consumption and Power Dissipation, S100 I/O Boards

Type Designation	Current Consump. (A)		Tot. Power Dissipation (W)	Comments	No of Boards	Total I_{tot}, P_{tot}
	+5 V	+24 V				
DSAI 130	0.25	0.11	3.8			
DSAI 130A	0.15	0.15	4.4	0.1 W/ch on connection unit at 20 mA		
DSAI 133	0.45	0.13	5.4			
DSAI 133A	0.26	0.1	3.7	0.1 W/ch on connection unit at 20 mA		
DSAI 146	0.25	0.10	3.8			
DSAI 155A	0.25	0.10	3.8			
DSAO 110	0.30	0.53	14.0			
DSAO 120	0.30	0.28	8.2			
DSAO 120A	0.35	0.58	14			
DSAO 130	0.30	0.22	8.6			
DSAO 130A	0.25	0.54	11			
DSAX 110	0.48	0.17	7.7			
DSAX 110A	-	-	-	0.1 W/ch on connection unit at 20 mA		
DSDC 111	1.40	0.10	12.0			
DSDI 110A	0.46	-	5.5	With DSTD 150A, DSTD 190		
DSDI 110A	0.46	8 mA/ch	12.0	With 4x DSTD 195		
DSDI 110A	0.46	8 mA/ch	18.5	With 4x DSTD 198		
DSDI 110A	0.46	-	7.5	With 4x DSTD 196		
DSDI 110A	0.46	8 mA/ch	17.0	With 4x DSTD 197		
DSDI 110A	0.46	8 mA/ch	18.5	With 4x DSTD 198		
DSDI 110AV1	0.23	-	4.4	With DSTD 150A DSTD 190V1		
DSDI 110AV1	0.23	-	4.4	With 4x DSTD 195/ DSTD 196P/DSTD 197/ DSTD 198		
DSDI 110AV1	0.23	-	4.4	With DSTD 145, DSTD 147, DSTD 148		
DSDI 120A	0.46	-	8.8			
DSDI 120AV1	0.23	-	7.7			

Table E-2. Current Consumption and Power Dissipation, S100 I/O Boards (Continued)

Type Designation	Current Consump. (A)		Tot. Power Dissipation (W)	Comments	No of Boards	Total I_{tot}, P_{tot}
	+5 V	+24 V				
DSDO 115	0.65	22 mA/ch	7.8	With DSTD 108/108L		
DSDO 115	0.65	-	7.7			
DSDO 115A	0.27	-	11	With DSTD 110A, DSTD 190V1		
DSDO 115A	0.27	-	1.4	With DSTD 108P, DSTD 108LP		
DSDO 115A	0.27	-	1.4	With DSTD 109P		
DSDO 115A	0.27	-	1.4	With DSTD 145, DSTD 147, DSTD 148		
DSDO 120	0.65	-	12.0			
DSDP 140A	1.1	0.15	6.7			
DSDP 150	1.0	-	7.0/7.8	Input/Output		
DSDP 170	0.6	-	4			
DSSR 122	-	-	65.0	With max. load		
DSSR 170	-	-	23.0	With max. load	2 (1)	
DSSS 171	-	0.1	6			
DSBC 174	0.6	0.04	4.0		1 (2)	
DSBC 176	0.6	0.04	4.0		1	
DSTD 108P	-	0.13	2.7	70% of all channels activated		
DSTD 108LP	-	0.13	2.7	70% of all channels activated		
DSTD 109P	-	0.045	9.5	70% of all channels activated		
DSTD 145	-	0.36	8.3	70% of all channels activated		
DSTD 147	-	0.36	11.5	70% of all channels activated		
DSTD 148	-	0.36	13	70% of all channels activated		
DSTD 195	-	0.045	1.6	70% of all channels activated		
DSTD 196P	-	0.16	3.3	70% of all channels activated		
DSTD 197	-	0.045	2.9	70% of all channels activated		
DSTD 198	-	0.045	3.3	70% of all channels activated		
					Sum	

(1) Do not include redundant power supply units in the calculation of number of boards/units.
(2) Two per I/O subrack if redundant S100 I/O bus extension.

Table E-3. Current Consumption and Power Dissipation, Power Supply and Sundry

Type Designation	Current Consump. (A)		Tot. Power Dissipation (W)	Comments	No of Units	Total I_{tot}, P_{tot}
	+5 V	+24 V				
SA1xx	-	-	100	Approx. for all types of power supply units	(1)	
RC527	-	0.7	15	For three fans		
TC512V1	-	0.1	2			
TC513V1	-	0.1	2			
TC514V2	-	0.1	2			
TC515V2	-	0.1	2			
TC516	-	0.1	2			
TC560V1	-	0.24	5.6			
TC561V1	-	0.28	6.6			
TC562	-	0.13	3			
TC570	-	0.02	0.5			
TC625	-	0.13	3			
TC630	-	0.1	2.4			
					Sum	

(1) Redundant power supply units should not be included in the calculation of number of boards/units.

Appendix F Load Calculation

F.1 Load Calculation Forms

Table F-1. Calculation of CPU-load from S100 and S800 Inputs

Signal type	No of signals	Basic load (ms)	Scan time (ms)	Dynamic load (ms)	Changes/sec. per signal	Total load
AI	A)	B) 0.20	C) ms E)=100*A*B/C E) %	F) 0.15	G) H)=A*G*F/10 H) %	E+H %
AIC	A)	B) 0.003	C) ms E)=100*A*B/C E) %	F) 0.08	G) H)=A*G*F/10 H) %	E+H %
DI cycl.	A)	B) 0.20/board D) ch/board	C) ms E)=100*A*B/C/D E) %	F) 0.05	G) H)=A*G*F/10 H) %	E+H %
DI interr.	A)			F) 0.60	G) H)=A*G*F/10 H) %	E+H %
DIC	A)	B) 0.003	C) ms E)=100*A*B/C E) %	F) 0.05	G) H)=A*G*F/10 H) %	E+H %
					Total	%

Table F-2. Calculation of CPU-load from S100 and S800 Outputs

Signal type	No of signals	Basic load (ms)	Scan time (ms)	Dynamic load (ms)	Changes/sec. per signal	Total load
AO	A)	B) 0.02	C) ms E)=100*A*B/C E) %	F) 0.18	G) H)=A*G*F/10 H) %	E+H %
AOC	A)	B) 0.003	C) ms E)=100*A*B/C E) %	F) 0.03	G) H)=A*G*F/10 H) %	E+H %
DO	A)	B) 0.003	C) ms E)=100*A*B/C E) %	F) 0.13	G) H)=A*G*F/10 H) %	E+H %
DOC	A)	B) 0.003	C) ms E)=100*A*B/C E) %	F) 0.03	G) H)=A*G*F/10 H) %	E+H %
					Total	%

Table F-3. Calculation of CPU-load from User Defined Type Circuits

Function	Execution time (ms)	Cycle time (ms)	Load (%)	Number	Total load
	A)	B)	C)=A*100/B C)	D)	C*D)
	A)	B)	C)=A*100/B C)	D)	C*D)
	A)	B)	C)=A*100/B C)	D)	C*D)
	A)	B)	C)=A*100/B C)	D)	C*D)
	A)	B)	C)=A*100/B C)	D)	C*D)
	A)	B)	C)=A*100/B C)	D)	C*D)
	A)	B)	C)=A*100/B C)	D)	C*D)
	A)	B)	C)=A*100/B C)	D)	C*D)
	A)	B)	C)=A*100/B C)	D)	C*D)
	A)	B)	C)=A*100/B C)	D)	C*D)
	A)	B)	C)=A*100/B C)	D)	C*D)
	A)	B)	C)=A*100/B C)	D)	C*D)
	A)	B)	C)=A*100/B C)	D)	C*D)
	A)	B)	C)=A*100/B C)	D)	C*D)
	A)	B)	C)=A*100/B C)	D)	C*D)
	A)	B)	C)=A*100/B C)	D)	C*D)
				Total	%

Appendix G Memory Calculation

G.1 Form for Memory Calculation

Table G-1. Calculation of RAM requirement

Object type	Remark	Total	Factor (kbytes)	RAM req.
AI/AO signals	S100 I/O		x 0.30	
	S400 I/O (MP 51 not included)		x 0.30	
	S800 I/O		x 0.27	
DI/DO signals	S100 I/O		x 0.26	
	S400 I/O (MP 51 not included)		x 0.26	
	S800 I/O		x 0.14	
S800 I/O station	No. of S800 I/O stations on AF 100		x 0.40	
Calculated signals	For presentation and event handling in AS 500 Series operator stations (including signals via Advant Fieldbus 100)		x 0.30	
PIDCON	Excluding I/O signals		x 1.50	
PIDCONA	Excluding I/O signals		x 8.5	
MANSTN	Excluding I/O signals		x 0.80	
RATIOSTN	Excluding I/O signals		x 1.00	
GENCON	Excluding I/O signals		x 0.50	
GENBIN	Excluding I/O signals		x 0.50	
GENUSD	Excluding I/O signals		x 0.50	
VALVECON	Excluding I/O signals		x 0.60	
MOTCON	Excluding I/O signals		x 0.80	
GROUP	Excluding I/O signals(1)	1	x 3.00	
SEQ	Excluding I/O signals		x 1.00	
DAT	No. of DB elements		x 0.02	
TEXT	No. of DB elements		x 0.14	
Table handling	No. of tables(2)		x 4.90	

Table G-1. Calculation of RAM requirement (Continued)

Object type	Remark	Total	Factor (kbytes)	RAM req.
MasterView 320	Basic requirements for QC07-LOS41	1	x 240.00	
	No. of displays(3)		x 2.00	
	No. of MasterView 320 with event lists(4)		x 9.00	
AS 500 Series operator station and IMS Station or MV800/1	Basic requirement for QC07-OPF41	1	x 799.00	
	No. of trend data storage logs(5)		x 12.00	
	Group alarm, No. of group objects		x 0.13	
	No. of group members		x 0.09	
MasterBatch 200/1	Basic requirement for QC07-BAT41	1	x 418.00	
	No. of SECCONx1.7+OPCONx6.0+ TANKCONx1.8		x 1.00	
	No. of processes(6)		x 25.00	
PROFIBUS DP	No. of Profibuses		x 1.20	
	Number of PROFIBUS slaves		x 0.80	
LONWORKS Network	No. of LONWORKS Communication modules (CI572/CI573)		x 65	
	No. of LONWORKS devices		x 0.2	
	No. of LONWORKS variables (input and outputs)		x0.06	
	No. of LONWORKS multiple network variable		x 0.33	
	No. of LONWORKS Event Treat		x 0.14	
No. of MasterBus 300/300E, RCOM/RCOM+, GCOM and MultiVendor Interface			x 8.00	
User Defined PC elements	Basic requirements for QC07-UDP41	1	x 132.00	
	Storage of user defined PC elements(7)	1	x 150.00	
Space for storage of User Diskette contents(7)			x 100.00	
Basic requirements for QC07-LIB41		1	x 32.00	
Basic requirements for QC07-LIB42		1	x479.00	
Basic requirements for QC07-FUZ41		1	x 40.00	
Basic requirements for QC07-COM41		1	x 33.00	
Basic requirements for QC07-BAS41		1	x 2207.00	
Spare RAM area(8)		1	x 40.00	40.00
Approximative total RAM requirement in kbytes (9)				

(1) The figures are calculated for 8 steps (MOTCON not included).
(2) The figures are calculated for 1 table with 10 rows and 100 values per row.
(3) The figures are calculated for 40 text strings with 20 characters and 30 dynamic values.
(4) The figures apply to 100 events per list.
(5) The figures are calculated for 1 log with 10 variables, each with 240 stored values.
Each value takes approximately 5 byte.
(6) The figures are calculated for 50 storage vessels, 4 sections and 20 operations with 6 recipe variables each.
(7) This is a recommended starting value. Adjustment of this figure might be necessary to do when the real need is known.
(8) Recommended value for most systems.
(9) Must be less than the RAM size of the processor module (8 or 16 Mbyte).

Appendix H Halt Codes

H.1 Example of Halt Code Printout

You can obtain the result of the command LSYSHI as a printout on the printer with the command HARDCOPY in accordance with Figure H-1.

```
'*LSYSHI
QC02-BAS21 *7.0/0 *02/01/01
COPYRIGHT 1994 BY ABB INDUSTRIAL SYSTEMS AB

CXNLIB7.0/0
CXKLIB *7.0/0
Network, node :11,1
Time, date      : 10:10:15, 1994-12-24
Current task   :CXKK 340     H'00482360
SSP   H'004800DA
D0    H'00000069      D1    H'00000834      D2    H'004A00DC      D3    H'0000FFFF
D4    H'00000172      D5    H'000003E5      D6    H'00002544      D7    H'000182D8
AO    H'00480128      A1    H'00480128      A2    H'0048545E      A3    H'0001C9F6
A4    H'00052886      A5    H'0048246E      A6    H'00480100      A7    H'0048246A
System stack
H'004800DA      H'2704      H'0000      H'5244      H'002C
H'004800E2      H'0165      H'C20A      H'FFFC      H'3A79
H'004800EA      H'2400      H'0000      H'ODEE      H'0048
H'004800F2      H'246E      H'0048      H'0100      H'0000
H'004800FA      H'0000      H'760A      H'0070
System halt code = 05
Bus time-out error in system or kernel mode
```

Figure H-1. Example of LSYSHI Printout

H.2 List of Halt Codes and Corrective Actions

Typical halt codes which can be read with the command LSYSHI and corrective measures are listed in this section. Further fault finding and **user repair** is described in Chapter 5, Maintenance.

DANGER

You should carefully follow general safety instructions given in Chapter 5, Maintenance when fault finding and operating an Advant Controller system to minimize the risk of injury to personnel and damage to the equipment.

NOTE

In all situations when the controller has stopped you should carefully read all halt codes and system messages available before you proceed. See Section 5.4.2.1, Reading of System Messages.

Table H-1. List of Halt Codes

Halt Code	Significance	Corrective Actions
-3.	Backup CPU in a redundant pair stopped when restarted	1. Check the mode switches on primary and backup CPU boards. Restart the backup CPU with the mode switch in the same position as the primary CPU had when it was last restarted. **NOTE** If position "AUTO" does not work then switch to "CLEAR" or vice versa. 2. Check size of primary memory on primary and backup CPU boards (8/16 MByte). Make sure they are equal and restart the backup (or the system).
00	Debug trap in system mode	The halt codes 0 - 5 do not normally appear in a system after commissioning but if one should appear, it is probably due to interference, program error or special hardware fault.
01	Fault in system mode (probably memory or bus fault)	
02	Fault in system mode (probably memory or bus fault)	
03	RAM fully occupied	
04	Addressing error in system mode	
05	Bus fault in system mode (e.g. impermissible board extraction or memory error)	
07	Memory error. RAM test.	Replace the processor module

Table H-1. List of Halt Codes (Continued)

Halt Code	Significance	Corrective Actions
09	Overload, STALL ALARM	Note the error code and the red LED indicators which have illuminated. LSYSHI gives the level of the overload and indicates the type of overload which has occurred. **S§LOSTAL = 0:** Hardware fault but not memory board fault. Replace the faulty hardware. **S§LOSTAL = -1:** Overload on PC level. Extend cycle times on PC. Hardware fault is possible; I/O board or communication board. Replace the faulty hardware.
0A	Memory error. The address to the incorrect position is in the address register A0. The error code appears during the test of the RAM which is only performed on initialization of the system.	Replace the processor module.
0b	System program check sum test error. RAM test.	Replace the processor module.
0C	Autotest error. Instruction test failed.	Replace the processor module.
0d	Autotest error. Interval timer test failed.	Replace the processor module.
0E	Autotest error. Interrupt controller test failed.	Replace the processor module.
0F	Autotest error. Bus error test failed.	Replace the processor module.
10	Level 7 interrupt. Power failure. Power up after power fail in a system that has no power fail handling, neither warm start up nor power fail restart.	Follow instructions in Section 5.5.9.5, Check of Power Supply.
16	Serious program error.	Follow instructions in Section 5.5.16, System Restart, INIT.
17	Wrong processor module type in the system.	Replace the processor module.
24	System with redundant processor modules only. Indication on the backup module. Error at changeover. Probably the system was not fully synchronized when an attempt to changeover was made.	Restart the backup module which was stopped.

Table H-1. List of Halt Codes (Continued)

Halt Code	Significance	Corrective Actions
2C	System with redundant processor modules only. Indication on the backup module. Internal error.	Replace the backup processor module.
32	System with redundant processor modules only. Indication on the "new" primary at changeover. Error in changeover. Unexpected status.	This means a serious shut down of a redundant system. Further detailed information of the possible reason of the halt is stored in the system. This information is accessible by ABB experts only.
36	System with redundant processor modules only. Indication on the "new" primary at changeover. Error in changeover. Unexpected status	This means a serious shut down of a redundant system. Further detailed information of the possible reason of the halt is stored in the system. This information is accessible by ABB experts only.
38	System with redundant processor modules only. Indication on the backup module. Internal error. System program in backup and primary is not equal.	Restart with the same system program in both processor modules.
40	System with redundant processor modules only. Error when initializing the backup module.	Try again by depressing the ENTER button. If the same error occurs, replace the backup module.
41	System with redundant processor modules only. Indication on the backup module. Error detected in the initial diagnostic test. The RCU-chip on the backup module may be malfunctioning.	Replace the backup module.
42	System with redundant processor modules only. Indication on the backup module. Internal error in the task-scheduler for the backup module.	Replace the backup module.
43	System with redundant processor modules only. Indication on the backup module. Hardware error on the RCU-chip.	Replace the backup module.
44	System with redundant processor modules only. Indication on the backup module. Error in the communication between the backup and primary modules.	Replace the backup module.

Table H-1. List of Halt Codes (Continued)

Halt Code	Significance	Corrective Actions
45	System with redundant processor modules only. Indication on the backup module. Internal error concerning interrupts in the backup module. Possibly malfunctioning RCU-chip.	Replace the backup module.
46	System with redundant processor modules only. Indication on the "new" primary at changeover. Error in changeover. Floating-point exception pending.	This means a serious shut down of a redundant system. Further detailed information of the possible reason of the halt is stored in the system. This information is accessible by ABB experts only
47	System with redundant processor modules only. Indication on the "new" primary at changeover. Error in changeover. MOVEM instruction to/from I/O during changeover.	This means a serious shut down of a redundant system. Further detailed information of the possible reason of the halt is stored in the system. This information is accessible by ABB experts only
48	System with redundant processor modules only. Indication on the "new" primary at changeover. Error in changeover. Status channel interrupt not pending during changeover.	This means a serious shut down of a redundant system. Further detailed information of the possible reason of the halt is stored in the system. This information is accessible by ABB experts only
80	System with redundant processor and S100 I/O bus redundancy. Error in S100 I/O bus cable or Bus Extender (DSBC 174/DSBC 176).	This means a serious S100 I/O bus cable or Bus Extender (DSBC 174/DSBC 176) error. Bus cable broken or faulty DSBC 174 or DSBC 176. The halt can also occur if the Bus Extender connected to the primary CPU is stopped by using the switch on the front of the Bus Extender.

Appendix I System Messages

I.1 Message Coding

System and error messages are format coded as follows:

11	1	13:25:09	28	20	CXPHSC1	A	H'81250B06	H'01400001	H'000A0050
Network	Node	Time	Type	Code	Task	Interrupted	Address	Data 1	Data 2

Interpretation can be found in Table I-1 below.

Table I-1. System Message Coding

	Significance
Network	Specifies within which communication network in the installation the message has been generated.
Node	Specifies the node in which the message was generated. If Network and Node are not specified, the message is from an engineering station.
Time	The time at which the message was generated.
Type	The type of message i.e. the error category in the Advant Controller
Code	Specifies the character of the change within the category, that is the nature of the fault.
Task	Specifies the software task affected by the message.
Interrupted	Specifies if the task has been interrupted.
Address	Specifies the address associated with the change of status.
Data 1	Optional extra information, expressed in decimal or hexadecimal (H') form.
Data 2	If data 2 contains no information, Data 1 only is presented. Data 2 can also be in decimal or hexadecimal (H') form.

I.2 Message Types

The type number classifies faults in accordance with the Table I-2.

Table I-2. System Message Types

Type	Cause	Notes
2	Overload	
5	Task interrupted	
10	Task killed	
17	MasterNet	See also Master Net User's Guide
18	Console communication	
20	Error on V24/ RS-232-C channel	
22	PC-interpreter	
23	Error in the controller data base	MMC, operator station
24	Data transmission fault	MMC, operator station
25	Fault in the operator station	MMC, operator station
26	Other faults	MMC, operator station
28	Process communication incl Data Set (AF 100, PROFIBUS-DP, LONWORKS, MasterFieldBus, RCOM)	
29	Redundant processor modules, operating system, kernel	
30	MasterBus Data Set Communication EXCOM Clock synchronization	See also Master Net User's Guide
34	GCOM	See Master Net User's Guide
39	Data Set Peripheral, Advant Fieldbus 100	
40	VFI communication	Internal errors. Please report to ABB
134	System/Node supervision	

I.3 List of System Messages and Corrective Actions

In the following listing those messages which are of particular interest to an end user are included. These can be easily corrected by the user himself.

System messages not described here shall be noted and forwarded to ABB to determine if any action is necessary.

Further fault finding and user repair is described in chapter 5 Maintenance.

DANGER

You should carefully follow general safety instructions given in Chapter 5, Maintenance when fault finding and operating an Advant Controller system to minimize the risk of injury to personnel and damage to the equipment.

NOTE

In all situations when the controller has stopped you should carefully read all halt codes and system messages available before you proceed. See Section 5.4.2.1, Reading of System Messages.

Type 2 Overload									
11	1	12:16:30	2	46	CXKK220				

Table I-3. Type 2, Code 46

Type	Code	Significance	Task	Comments/Actions
2	46	Overload	CXKK220	The system is overloaded on a low priority

Type 5 Task interrupted									
11	1	12:15:31	5	21	CXAF000	A	H'00005982	H'00000004	H'00000000

Table I-4. Type 5, Code 21

Type	Code	Significance	Task	Comments/Actions
5	21	Task interrupted	CXAF000 for EXCOM 1 CXAF000 for EXCOM 2	This message occurs before restart of EXCOM tasks.

Type 10 Task killed									
11	1	12:23:44	10	19	CXAA 000	A	H'000FF333	61000	

Table I-5. Type 10, Code 19

Type	Code	Significance	Data 1	Comments/Actions
10	19	Task interrupted	61000 61001 61002 61700	Gap in Data Set Dat referred to missing No RAM at initialization No Data Set or Dat

Type 17 MasterNet									
11	1	12:23:44	17	1	CXNM540	A	H'00000000	21	11

Table I-6. Type 17, Code 1, 2, 3, 7, 8, 9 and 11

Type	Code	Significance	Data 1	Data 2	Comments/Actions
17	1	Configuration error	21	Node number	More than one node with the same node number or MB 300, GCOM. Change node number!
			22	Network and node number	AC400 node has different node numbers. Set the same node number on all busses on the node!
			23	Network and node number	The node is connected to more than one control network. Make sure that the node is connected to one control network, i.e. that all network numbers are within the same decade!
			24	Network and node number	MB 300, GCOM interface incompatible with system software.
			25	Network and node number	Incorrect (duplicate) network number. Change the network number to the correct number!
			50	H'LRSNCPSP LR SN CP SP	CS513 config. error Logical Record in the data base Slave Number Carrier Position in the subrack Submodule Position on the carrier
			51	H'LRSNCPSP LR SN CP SP	CI532 config. error Logical Record in the data base Slave Number Carrier Position in the subrack Submodule Position on the carrier
			52	H'LRSNCPSP LR SN CP SP	CI532 config. error. Position already used Logical Record in the data base Slave Number Carrier Position in the subrack Submodule Position on the carrier

Table I-6. Type 17, Code 1, 2, 3, 7, 8, 9 and 11 (Continued)

Type	Code	Significance	Data 1	Data 2	Comments/Actions
17	1	Configuration error	53	H'LRSNCPSP LR SN CP SP	Config. error Logical Record in the data base Slave Number Carrier Position in the subrack Submodule Position on the carrier
			54	H'LRSNCPSP LR SN CP SP	The LAN channel is already used Logical Record in the data base Slave Number Carrier Position in the subrack Submodule Position on the carrier
	2	Shortage of resources	18	Network number	Too many nodes connected to the network MB 300. Reduce the number of nodes!
			19	0=main processor >0 = slave processor	Incorrect allocation of memory at start-up.
	3	Disconnection	11	 2 3	Data link level disconnected Faulty communication board or wiring Faulty communication board
			13	 H'RRAANENO RR AA NE NO	Connection with node broken. Faulty communication board or wiring. Disconnection cause, 00 = no contact with slave node. Slave channel number. 00 = all channels. Network number Node number
	7	Reconnected	13	H'0000NENO NE NO	Communication in working order Network number Node number

Table I-6. Type 17, Code 1, 2, 3, 7, 8, 9 and 11 (Continued)

Type	Code	Significance	Data 1	Data 2	Comments/Actions
17	8	Hardware error	02	H'CCSSTT00 CC SS TT	CS513 error Carrier position in the subrack Submodule position on the carrier Type of error: - 03= Checksum error in received frame - 04= CS513 missing/not accessible - 0A= Late collision while transm. a frame - 0B= Loss of carrier from transceiver - 0D= Controller failed to transm. frame - 44= Controller failed to initialize - 48= Babble error. Frame > 1518 bytes - 49= Transc. "heart beat error. Transc. is not properly connected or the SQE test is not working.
			03	H'CC00EE00 CC EE	SC520 error Carrier position in the subrack Type of error: - 01= Failed to initialize - 03= Board has halted - 04= Board missing or not accessible
			04	H'CCSSEE00 CC SS EE	CI532/535 error Carrier position in subrack Submodule position on the carrier Type of error: - 01= Failed to initialize - 03= Board has halted - 04= Board missing or not accessible
			05	H'CCSSEE00 CC SS EE	CI531 error Carrier position in subrack Submodule position on the carrier Type of error: - 01= Failed to initialize - 03= Board has halted - 04= Board missing or not accessible
	9	Hardware in working order	02 03 04 05 CC SS	H'CCSS0000	CS513 in working order SC520 in working order CI532/535 in working order CI531 in working order Carrier position in subrack Submodule position on the carrier (if relevant]

Table I-6. Type 17, Code 1, 2, 3, 7, 8, 9 and 11 (Continued)

Type	Code	Significance	Data 1	Data 2	Comments/Actions
17	11	Clock synchronization message	02	0	No clock master node available.
			03	Backup node	There might be more than one backup nodes in the net. Set time again!
			04	0	More than one clock master in the net. Set time again!

Type 18 Console Communication									
11	1	12:31:56	18	8	DECC100		H'00018580	5	H'00120000

Table I-7. Type 18, Code 8 and 11

Type	Code	Significance	Data 1	Comments/Actions
18	8	Error code 0 - 5 indicates fault in the system, 6 - 10 indicates fault in the engineering station	0 1 2 3 4 5 6 7 8 9 10	Status fault in system I/O fault in the system Bus fault in the system Time tripping (time-out) in the system Memory fault in the system Address fault in the system Internal fault Illegal instruction Faulty address Buffer overflow Jump table index without limit
18	11	Communication failure between Advant Controller and engineering station		

Type 20 Error on V24 / RS-232-C Channel									
11	1	06:03:54	20	1	CXBH260		H'000000B8	H'00020609	H'00000082

Table I-8. Type 20, Code 1

Type	Code	Significance	Task	Comments/Actions
20	1	No contact with printer, terminal and external computer	CXBH260	Printer
			CXBH261	MasterView 320 no 1
			CXBH262	MasterView 320 no 2
			CXBH263	MasterView 320 no 3
			CXBH264	MasterView 320 no 4
				Connected unit has the voltage disconnected. Cable not connected. XON-signal not generated from the unit connected. Fault in signal transmission, e.g. modem or cable.

Type 22 PC interpreter									
11	1	12:23:45	22	9	DAYIP30			109	34392

Table I-9. Type 22, Code 9, 12, 13 and 20

Type	Code	Significance	Data 1	Comments/Actions
22	9		100 101 109 110 113	Correct again after overload. Overload. Insufficient memory or memory error. Clock change or overload. Interpreter task begun before INIT of the process communication has been completed. This message needs no corrective action during the initialization.
	12	This type of fault affects the pulse counter and positioning board DSDP 140A and DSDP 150 Address = board address	100 101 102 103 104 105 106 107 108 109 Continue	The address jumpering of the positioning board and the I/O address given on the PC element POS-A are different. The positioning board is inactive. The I/O address given on the PC element POS-A is odd. The address jumpering of the positioning board and the I/O address given on the PC element POS-O are different. The positioning board is inactive. The I/O address given on the PC element POS-O is odd. The address jumpering of the positioning board and the I/O address given on the PC element POS-L are different. The positioning board is inactive. The I/O address given on the PC element POS-L is odd. The address jumpering of the positioning board and the I/O address given on the PC element PULSE-S are different. The I/O address given on the PC element PULSE-S is odd. The address jumpering of the positioning board and the I/O address given on the PC element FREQ-SP are different. The I/O address of the PC element FREQ-SP is odd.

Table I-9. Type 22, Code 9, 12, 13 and 20 (Continued)

Type	Code	Significance	Data 1	Comments/Actions
22	12		110	The address jumpering of the positioning board and the I/O address given on the PC element FREQ-MP are different.
			111	The I/O address given on the PC element FREQ-MP is odd.
			112	POS-A reactivated
			113	POS-O reactivated
			114	POS-L reactivated
			115	PULSE-S reactivated
			116	FREQ-SP-reactivated
			117	FREQ-MP reactivated
			118	DSDP board reactivated
			119	DSDP out of order
			120	Incorrect address in PC element, the address is too high or too low (POS-A, POS-L, POS-O, FREQ-SP, FREQ-MP, COUNT-DP).
			121	Incorrect address in the PC element
			122	Incorrect address to MV 100 unit
			127	MV 100 controller out of order
			128	MV 100 controller in order
			129	MV 100 unit out of order
			130	MV 100 unit in order
			131	DSDC board out of order
			132	Fault on DSDC board
			133	Fault on DSDC board
			134	DSDC board reactivated
			137	DSXW board out of order
			138	DSXW board reactivated
			139	Fault on DSXW board
			141	DSDP 170 board in working order
			142	DSDP 170 board out of order
	13		100	Free-programmable module out of order
			101	Free-programmable module active
	20		102	Item designation pointed out by data base element START is not a CONTRM.

Type 26 Other Faults (System Messages from Printer and operator station)									
11	1	16:23:54	26	12	DCCA910		H'04900010	1	2

Table I-10. Type 26, Code 12

Type	Code	Address	Comments/Actions
26	12	H'04900010 H'04900020	Text too long to be printed PC element PRINT with LAST missing. Set LAST = 1 in the last PRINT element!

Type 28 Process Communication									
11	1	16:23:54	28	20	CXPHSC1		H'81250B06	H'014D0001	

Data 1 contains concepts and instance numbers which can be used to locate incorrect data base elements with the help of the command MDB. Do MDB "Concept". Instance.

Example:
A system message includes Data 1 = H' 01400001. The most significant word 0140 represents the concept while the least significant word 0001 represents the instance number. Convert with the help of Table I-11 to decimal form. Apply the decimal form and do MDB 333.1 to see the corresponding data base.

From a more general viewpoint the command LCT is used to list all types of data base elements in the system and all its concepts (LOF FILE). If the logical file for a certain data base element is required, search for it in the UCONCSTR column and follow the line out to LOGFILE. An S has been added for channels, for example: DI-channel is designated DIS. DI-channel has logical file 8. DI-boards have logical file 4.

Table I-11. List of Common Concept Numbers in System Messages

Hex	Dec	DB Element (Concerning)
2	2	AI, Analog input boards
3	3	AO, Analog output boards
4	4	DI, Digital input boards
5	5	DO, Digital output boards
6	6	Analog input signals
7	7	Analog output signals
8	8	Digital input signals
9	9	Digital output signals
B5	181	MFb (S400 I/O) Units
11E	286	AXR (Analog object board)
14D	333	Advant Fieldbus 100 (CI52x), PROFIBUS-DP, CI541 or LONCHAN
14E	334	Advant Fieldbus 100 units, Profibus slaves or LONDEV
14F	335	DataSet Peripheral
151	337	Processor module
15D	349	MasterFieldbus (CI570)

Table I-11. List of Common Concept Numbers in System Messages

Hex	Dec	DB Element (Concerning)
15F	351	Event Set
167	359	S100 I/O bus extension (DSBC 174/DSBC 176)
16B	363	LONNV, LONWORKS Network Variables
16C	364	LONMNVI, LONWORKS Multiple Network Variables
16E	366	LON, LONWORKS Interface

Table I-12. Type 28

Type	Code	Data 1	Data 2	Comments/Actions
28	20	Concept, instance No.		Bus fault. No board responds at the address used. The board is extracted, faulty or incorrect jumpered.
		H'011E (286), x	H'xxxxyyyy	Redundant S100 boards. yyyy = 0 The unit (board 1 and board 2) has failed yyyy = 1 Board 1 has failed yyyy = 2 Board 2 has failed
		H'015D (349),x	H'xxxxyyyy	MasterFieldBus xxxx = Bus number yyyy = Not used.
		H'00B5 (181),x	H'xxxxyyyy	MasterFieldBus nodes xxxx = Bus number yyyy = Node number
		H'014D (333),x	H'xxxxyyzz	AF100 and PROFIBUS xxxx=Bus number yy=0: No redundant CI52x yy=1: CI52x sub module 1 yy=2: CI52x sub module 2 zz = Station number (of CI52x or CI541)
		H'014E (334),x	H'xxxxyyyy	AF100 stations and PROFIBUS slaves xxxx = Bus number yyyy = Station number
		H'0145 (325),x	H'wwxxyyzz	S800 I/O modules ww = Bus number xx = Station number yy = Cluster number zz = Position number
		H'0167 (359),x	H'0000xxxx	Single DSBC176 or redundant DSBC174 bus extender xxxx = 1 Left board has failed xxxx = 2 Right board has failed.

Table I-12. Type 28 (Continued)

Type	Code	Data 1	Data 2	Comments/Actions
28	21	Concept, instance No.		The internal diagnostics of the board have reported a hardware fault. There can also be a value too small or too large on a reference channel.
		H'011E (286),x	H'xxxxyyyy	Redundant S100 boards. Internal hardware status. xxxx = H'0000 Undefined error. xxxx = H'00C9 = Fault bit set. xxxx = H'00CA = Toggle error. xxxx = H'00CB = ADC reference error. xxxx = H'00D2 = Checksum error. xxxx = H'00D3 = Error in DPM. xxxx = H'00D4 = Error in internal memory. xxxx = H'00D5 = Error in external memory. xxxx = H'00D6 = Watch dog error. xxxx = H'00D7 = Interval clock error. xxxx = H'00D8 = ADC reference error, 0 V. xxxx =H'00D9 = ADC reference error, 10 V. xxxx = H'00DA = ADC reference error, 5 V. xxxx = H'00DB = Gain error. xxxx = H'00DC = AO supervision error. yyyy = 0 Board 1 and board 2 has failed. yyyy = 1 Board 1 has failed yyyy = 2 Board 2 has failed
		H'015D (349),x	H'xxxxyyyy	MasterFieldBus xxxx = Bus number yyyy = Not used
		H'00B5 (181),x	H'xxxxyyyy	MasterFieldBus nodes xxxx = Bus number yyyy = Node number

Table I-12. Type 28 (Continued)

Type	Code	Data 1	Data 2	Comments/Actions
28	21	H'014D (333),x	H'xxxxyyzz	AF100 and PROFIBUS xxxx = Bus number yy = 0 No redundant CI52x yy = 1 CI52x sub module 1 yy = 2 CI52x sub module 2 zz = Station number (of CI52x or CI541) or xxxxyyzz = 32-bit device error diagnostics.
		H'014E (334),x	H'xxxxyyyy	AF100 stations and PROFIBUS slaves xxxx = Bus number yyyy = Station number
		H'016E (366),x	H'xxxxyyyy	LON device error bits xxxx = 0001 Error command xxxx = 0002 EEPROM access error xxxx = 0008 RAM Defective xxxx = 0010 Parameter Checksum error xxxx = 0030 Self test failed xxxx = 0040 Watch dog time-out xxxx = 0080 Runtime error
		H'0145 (325),x	H'wwxxyyzz	S800 I/O modules ww = Bus number xx = Station number yy = Cluster number zz = Position number
		H'0167 (359),x	H'xxxxyyyy	Single DSBC176 or redundant DSBC174 bus extender xxxx = Status from DSBC174 or DSBC176. yyyy = 1 Left DSBC17x connected to left CPU. yyyy = 2 Right DSBC174 connected to right CPU.
	23			A measurement range not permitted for pulse counter.
	24	6,x		An analog input has a value outside the working range of the AD converter.
	25		H'xxxxyyyy	Interrupted communication on the distributed I/O bus. See manual MasterFieldbus and S400 I/O xxxx = Bus number yyyy = Node number
	26		H'xxxxyyyy	Fault at one of the nodes of the distributed I/O bus. xxxx = Bus number yyyy = Node number
	28			Channel fault in supervised AO channel.

Table I-12. Type 28 (Continued)

Type	Code	Data 1	Data 2	Comments/Actions
28	29		H'xxxxyyyy	MasterFieldbus cable A fault xxxx = Bus number yyyy = Node number
	30		H'xxxxyyyy	MasterFieldbus cable A in operation xxxx = Bus number yyyy = Node number
	31		H'xxxxyyyy	MasterFieldbus cable B fault xxxx = Bus number yyyy = Node number
	32		H'xxxxyyyy	MasterFieldbus cable B in operation xxxx = Bus number yyyy = Node number
	33			AO channel external fault
	34			AI channel overflow

Table I-12. Type 28 (Continued)

Type	Code	Data 1	Data 2	Comments/Actions
28	39	Concept, instance No.		A previous hardware error has vanished. The board or node is taken into operation again.
		H'015D (349),x	H'xxxxyyyy	MasterFieldBus xxxx = Bus number yyyy = Not used.
		H'00B5 (181),x	H'xxxxyyyy	MasterFieldBus nodes xxxx = Bus number yyyy = Node number
		H'014D (333),x	H'xxxxyyzz	AF100 and PROFIBUS xxxx = Bus number yy= 0 No redundant CI52x yy= 1 CI52x sub module 1 yy= 2 CI52x sub module 2 zz = Station number (of CI52x or CI541)
		H'014E (334),x	H'xxxxyyyy	AF100 stations and PROFIBUS slaves xxxx = Bus number yyyy = Station number
		H'0145 (325),x	H'wwxxyyzz	S800 I/O modules ww = Bus number xx = Station number yy = Cluster number zz = Position number
		H'0167 (359),x	H'xxxxyyyy	Single DSBC176 or redundant DSBC174 bus extender. xxxx = 400 Status word from DSBC17x yyyy = 1 Left DSBC17x connected to left CPU. yyyy = 2 Right DSBC174 connected to right CPU
	55	Concept, instance No.		Gain factor for linearization of Pt 100 outside permissible value
	56			Time interval or accumulated time for pulse counter outside permitted value.

Table I-12. Type 28 (Continued)

Type	Code	Data 1	Data 2	Comments/Actions
28	74	Concept, instance No. H'015F (351),x	H'0000000x	Reference in EVS(R), AIEV or DIEV, cannot be found. Less number of references than in corresponding EVS(S) or reference is of wrong type. Example: REF5 in EVS(S) is a DIC but REF5 in EVS(R) is an AIEV. x = 9 Reference is neither AIEV nor DIEV, probably missing. x = A Reference is AIEV instead of DIEV or vice versa. x = B Reference is not AIEV or DIEV or is not active.
	76	Concept, instance No. H'015F (351),x	H'0000000x	EVS(R) has been removed. Reconfiguration will be done. x = 0 Removed EVS(R) belonged to AF 100 x = 1..9 Removed EVS(R) belonged to RCOM network 'x'.
	-1	Concept, instance No. H'014D (333),x	H'xxxxxxxx	Process error diagnostics from remote device AF100, 32-bit process error diagnostic. xxxxxxxx = H'20000000, More than 50 errors xxxxxxxx = H'40000000, Simultaneous bus masters xxxxxxxx = H'80000000, Redundant line failed
	-2	Concept, instance No H'014D (333),x	H'xxxxyyzz	AF100 device.error xxxx = Bus number yy = 0 No redundant CI52x yy = 1CI52x sub module yy = 2 CI52x sub module 2 zz = Station number (of CI52x)

Table I-12. Type 28 (Continued)

Type	Code	Data 1	Data 2	Comments/Actions
28	-4	Concept, instance No		System Error. Device has one or more system errors.
		H'014D (333),x		**AF100,** 32-bit system error diagnostic:
			H'00200000	Wrong parameter memory
			H'00400000	No station configured
			H'00800000	Ba version conflict
			H'01000000	Invalid configuration table
			H'02000000	Invalid telegram detected
			H'04000000	Multiple devices (station number conflict)
			H'08000000	Permenent sender detected
			H'10000000	Too many signal addresses
			H'20000000	Bus master synchronization lost
			H'40000000	Simultaneous time masters
			H'80000000	Invalid bus length
		H'014D (333),x	H'40000000	**PROFIBUS** address conflict
		H'014D (333),x		**LONWORKS channel** error bits:
			H'00000002	Parameter not correct
			H'00000008	Can not open LONWORKS driver
			H'00000010	Location mismatch
			H'00000020	Supervision timeout
			H'00000040	Runtime error
			H'00000080	Subnet/node mismatch
			H'00010000	Error command received
		H'014E (334),x		**LONWORKS device** error bits:
			H'00000002	Device error bits
			H'00000004	Parameters not correct
			H'00000010	Device not responding
			H'00000020	Location mismatch
			H'00000040	Supervision timeout
			H'00000080	Runtime error
			H'00010000	Error command received

Table I-12. Type 28 (Continued)

Type	Code	Data 1	Data 2	Comments/Actions
28	-5	Concept, instance No		Minor Device/Station Error or I/O S800 Module warning. Nonfatal hardware error.
		H'0145 (325),x	H'wwxxyyzz	S800 I/O modules ww = Bus number xx = Station number yy = Cluster number zz = Position number
		H'014E (334),x	H'xxxxyyyy	CI810 or CI820 xxxx = Bus number yyyy = Station number
		H'014D (333),x		LONWORKS channel The configured location, subnet or/and node for the channel does not match the actual values in the device.
	-6	Concept, instance No		Communication error
		H'014D (333),x	H'xxxxyyzz	AF100 and PROFIBUS. Communication Error. Reason: No contact with device xxxx = Bus number yy = 0 No redundant CI52x yy = 1 CI52x sub module 1 yy = 2 CI52x sub module 2 zz = Station number (of CI52x or CI541V1)
	-8	Concept, instance No. H'014D (333),x		Bus controller CI52x halted
	-9		Diagnostics info	Fatal bus error in CI52x, modem or cable
	-10		H'xxxxyyzz	Redundant communication media error xxxx = Bus number yy = 0 Non-redundant yy = 1 CI522 module I yy = 2 CI522 module II zz = Cable number
	-11		H'xxxxyyzz	Redundant communication media in working order xxxx = Bus number yy= 0 Non-redundant yy = 1 CI522 module I yy = 2 CI522 module II zz = Cable number
	-14		H'xxxxyyyy	Redundant board changeover xxxx= Internal information yyyy= New primary CI522 module number

Type 29 Redundant Processor Modules, Operating System, Kernel									
11	1	18:33:55	29	2	CXKK600		H'00000012	1	5

Table I-13. Type 29, Code 1, 2, 3 and 4

Type	Code	Significance	Address	Comments/Actions
29	1	Message from redundant processor module diagnostics	1 3 4	Changeover has been performed automatically. Fault in backup processor module. Diagnostics fault.
	2	Memory error in processor module RAM	1 2	The frequency of corrected bit-errors has exceeded a certain limit. Data 1 = processor module position. The total number of corrected bit errors has exceeded a certain limit. Data 1 = processor module position.
		Program card supervision	H'10 H'11 H'12 H'13	Correct program card (PCMCIA 2.0) replaced. Program card memory checksum error. Program card removed (missing card). Wrong program card. For the addresses H'10..H'13 data 1 and data 2 give the position and subposition respectively.
	3	Incorrect backup voltage for RAM	1	Check battery backup.
	4	Message from minute pulse handler	1 2	No minute pulse available (≥ 3 pulses missing) Minute pulse outside time range. Data 1 gives the difference in units of 0.1 ms.

Type 30 MasterBus (Data Set, EXCOM)									
11	1	13:25:09	30	21	CXAA000		H'EEAC	H'1010002	H118100FF

Table I-14. Type 30, Code 21, 23

Type	Code	Significance	Address	Data 1	Data 2	Comments/Actions
30	21	Overload in receiving end.	H'EEAC (=61100)	1 (channel full)	H'XXYY0000	Routine: CXAA000 DS (MV 300) CXAM000 DS [MVI, RCOM) CXAT000 TS (MV 300) XX= Destination network YY= Destination node
		Overload in receiving end.	Message ident. number	Dest. netw.	Destination node	Routine: CXAF00x (EXCOM)
	23	Fault in the data base element (DS, MS, TS). There are no data references. DS or MS has been blocked.	H'EB28 (=60200)	4	DS, MS, TS number	Routine: CXAA000 DS (MV 300) CXAM000 DS [MVI, RCOM) CXAT000 TS (MV 300)
		Incorrect polling time at receiving data base element (DS or MS). DS or MS blocked.	H'ED1D (=60701)	4	DS, MS number	Routine: CXAA000 DS (MV 300) CXAM000 DS [MVI, RCOM)
		Transmitting and receiving data base elements (DS, MS, TS) have different data references.	H'ED80 (=60800)	4	H'XXXXYYYY	Routine: CXAA000 DS (MV 300) CXAM000 DS [MVI, RCOM) CXAT000 TS (MV 300) XXXX= Number of data references in DS, MS or TS YYYY= DS, MS or TS number

Table I-14. Type 30, Code 21, 23 (Continued)

Type	Code	Significance	Address	Data 1	Data 2	Comments/Actions
30	23	The data reference of the data base element (DS, MS or TS) does not exist.	H'EE49 (=61001)	4	H'XXXXYYYY	Routine: CXAA000 DS (MV 300) CXAM000 DS [MVI, RCOM) CXAT000 TS (MV 300) XXXX= Number of data references in DS, MS or TS YYYY= DS, MS or TS number
		The receiving reference in the data base element (DS, MS or TS) is not addressable.	H'EEAD (=61101)	4	DS, MS, TS number	Routine: CXAA000 DS (MV 300) CXAM000 DS [MVI, RCOM) CXAT000 TS (MV 300)
		The data base element (DS, MS or TS) addressed does not exist.	H'FICC (=61900)	3	H'XXYYZZVV	XX= Destination network YY= Destination node ZZ= DS, MS or TS number VV=1: transmitting type VV=2: receiving type

Type 39 Data Set Peripheral, Advant Fieldbus 100									
11	1	13:25:10	39	6	CXAP000		H'00230011	H'014F0001	

Table I-15. Type 39

Type	Code	Significance	Data 1	Data 2	Comments/Actions
39	1	Configuration of DSPs on the communication interface or changing the DSP state has failed.	Concept, instance of first DSP concerned	Result from board operation	Command time out or hardware error
	2	DSPs exist which are scanned slower than definition.		Basic cycle time used in HEX	One or several DSPs are defined for a CYCLETIM< basic cycle time. The DSPs concerned are updated with the basic cycle time. The basic cycle time is changed with the APP command.
	5	Unconfigured DSPs exist		No data	1. One or several unconfigured DSPs have been found after configuration at start-up. The DSPs might automatically be configured at reconfiguration. 2. Previous configuration failed.
	6	Communication to the communication interface is lost.	See Comments	See Comments	The communication interface is removed or does not function properly. For messages with address: 00230011, 00240011, 00240012 Data 1: DSP data base concept, instance number Data 2: No data For messages with address: 00040012 Data 1: 0 Data 2: Logical bus number

Table I-15. Type 39 (Continued)

Type	Code	Significance	Data 1	Data 2	Comments/Actions
39	7	Illegal bus or bad definition of Advant Fieldbus 100	See Comments	See Comments	The DSP is defined for a non existing bus or the bus is badly defined. In case the DSP bus number is badly defined: Data 1: DSP data base concept, instance number Data 2: Logical bus number Otherwise: Data 1: 0 Data 2: Logical bus number
	9	The DSP has badly defined references.	Concept, instance of the DSP concerned	No data	The DSP references e.g. a non existing DAT.
	14	Illegal definition of DSP		Internal error code	The DSP is badly defined and by this not configured, The bad definition concerns: IDENT, STATION or no DATs are referenced.

Type 134 System/Node Supervision									
11	1	13:25:10	134	20			H'	H'	H'

Table I-16. Type 134, Code

Type	Code	Significance	Data 1	Data 2	Comments/Actions
134	20	AC 410/AC450, 24 V error	Concept, instance No.	MSW: Direction LSW: Channel	H'EEEE ⇒ Error coming H'2222 ⇒ Equip. in working order 1 ⇒ Channel 1 2 ⇒ Channel 2
	21	AC 410/AC450, regulator error		MSW: Direction LSW: Regulator	H'EEEE ⇒ Error coming H'2222 ⇒ Equip. in working order AC450 0 ⇒ Common reg. error (any/none of 1 - 4 erroneous). 1 ⇒ Regulator 1 error. 2 ⇒ Regulator 2 error. 3 ⇒ Regulator 3 error. 4 ⇒ Regulator 4 error. AC410 101⇒ Regulator missing. 102⇒ Regulator error.
	22	AC 410/450, battery error		MSW: Direction LSW: Battery	H'EEEE ⇒ Error coming H'2222 ⇒ Equip. in working order 1 ⇒ Battery A (Only AC 450) 2 ⇒ Battery B (Only AC 450)
	23	AC 410/450, backup power supply error		MSW: Direction LSW: Backup power supply	H'EEEE ⇒ Error coming H'2222 ⇒ Equip. in working order 1 ⇒ Unit A (Only AC 450) 2 ⇒ Unit B (Only AC 450)
	24	AC 410/450, fan error		MSW: Direction LSW: Not used	H'EEEE ⇒ Error coming H'2222 ⇒ Equip. in working order
	25	AC 450, I/O 24 V error		MSW: Direction LSW: Channel	H'EEEE ⇒ Error coming H'2222 ⇒ Equip. in working order 1 ⇒ Channel A 2 ⇒ Channel B

Table I-16. Type 134, Code (Continued)

Type	Code	Significance	Data 1	Data 2	Comments/Actions
134	26	AC450, I/O regulator error	Concept, instance No.	MSW: Direction LSW: Regulator	H'EEEE ⇒ Error coming H'2222 ⇒ Equip. in working order 1⇒ Regulator missing. 2⇒ Regulator error.
	27	AC450, I/O fan error		MSW: Direction LSW: Not used	H'EEEE ⇒ Error coming H'2222 ⇒ Equip. in working order
	28	AC 410/450, user defined error		MSW: Direction LSW: Which error	H'EEEE ⇒ Error coming H'2222 ⇒ Equip. in working order 1⇒ F1. 2⇒ F2. (Only AC 450) 3⇒ F3. (Only AC 450) 4⇒ F4. (Only AC 450)
	29	AC 450, TC520 communication error		Status of operation	
	31	AC 450, TC520 communication error		Status of operation	
	70	AC 450, S100 I/O connection error		MSW: Direction LSW: Not used	H'EEEE ⇒ Error coming H'2222 ⇒ Error going

Appendix J Hexadecimal to Decimal Representation

J.1 Conversion Guide

An explanation of the difference between notation systems is necessary to avoid confusion. The decimal system is that commonly used but binary and hexadecimal notation systems are often used in computers. The decimal notation system uses the digits 0 - 9, the binary system 0 - 1, the hexadecimal system 0 - 9 and the letters A - F where A represents 10, B represents 11, C represents 12, D represents 13, E represents 14 and F represents 15. The examples below are intended to explain the structure of the notation systems.

Decimal notation:

$1090 = 1 * 10^3 + 0 * 10^2 + 9 * 10^1 + 0 * 10^0 = 1090$

Binary notation:

$1010 = 1 * 2^3 + 0 * 2^2 + 1* 2^1 + 0* 2^0 = 10$ (dec)

Hexadecimal notation:

$1099 = 1 * 16^3 + 0 * 16^2 + 9 * 16^1 + 9 * 16^0 = 4249$ (dec)

$A09B = 10 * 16^3 + 0 * 16^2 + 9 * 16^1 + 11* 16^0 = 41115$ (dec)

From the examples above, it is seen that each position in a number corresponds to the value times the base (2, 10, 16) raised to the power corresponding to its position in the number.

In the Advant Controller 400 Series, numbers in hexadecimal notation are identified by an introductory H'. Decimal notation is used otherwise.

Examples:	H'0000357A	Hexadecimal
	00003578	Decimal

The following shows a table for rapid conversion of up to four-figure hexadecimal numbers. If the number contains more figures, the value can be calculated in accordance with the examples above.

For example: H'257E = 8192 + 1280 + 112 + 14

Table J-1. Conversion of up to Four Figure Hexadecimal Numbers

HEX	DEC	HEX	DEC	HEX	DEC	HEX	DEC
0	0	0	0	0	0	0	0
1	4096	1	256	1	16	1	1
2	8192	2	512	2	32	2	2
3	12288	3	768	3	48	3	3
4	16384	4	1024	4	64	4	4
5	20480	5	1280	5	80	5	5
6	24576	6	1536	6	96	6	6
7	28672	7	1792	7	112	7	7
8	32768	8	2048	8	128	8	8
9	36864	9	2304	9	144	9	9
A	40960	A	2560	A	160	A	10
B	45056	B	2816	B	176	B	11
C	49152	C	3072	C	192	C	12
D	53248	D	3328	D	208	D	13
E	57344	E	3584	E	224	E	14
F	61440	F	3840	F	240	F	15

INDEX

A

Address D-4
Advant Station 500 Series 1-105
AI810 1-75
AI820 1-75
AI830 1-75 to 1-76
AI835 1-75
AO810 1-75
AO820 1-75
Application Program Backup
    Appropriate Hardware and Software 3-4
    Overview 1-26
    Working procedures 5-87
Arithmetic 1-97

B

Backup power supply for RAM and system clock 1-44
Backup processor module 4-1
Battery backup time 3-58
Block 1-22

C

Calendar time functions 1-97
CI810V1 1-72
CI820 1-72
Compact MTUs 1-77
Configuration mode 4-1
Configuration/Application Building 3-72
Connection Unit 1-49
Controller
    Block diagram 1-22
    Functional interfaces 1-23
    Functional modularization 1-23
Controller system configuration 3-72
CPU-load
    Base-Load 3-45
    Calculation principles 3-41
    Data Set 3-51
    Logging 3-53
    Masterview 320 3-52
    Others 3-54
    PC and Process I/O 3-46
    Performance-General 3-44
    Subscription, Command, Event 3-49
Creating 2-57
Current consumption 3-6

D

Data and text handling 1-97
Data entry 2-57
Data Set 1-92
Delivered Version Specification C-1
Delivery Specification C-1
DI810 1-73
DI811 1-73
DI820 1-73
DI821 1-73 to 1-74
Dimensioning 2-57
Distributed connection units 2-36
DO810 1-73 to 1-74
DO820 1-74

E

Enter
    Safety aspects 5-1 to 5-2
Environmental Adaptation 1-118
Environmental Considerations 2-2
Event Handling
    Technical Data 3-60
Extended MTUs 1-77
External clock synchronization
    Description 1-35
    Electrical data A-46
    Installation 2-31

F

Feedback control 1-101
Frequency measurement 1-98
Functional units 1-96
Fusing in distribution board 3-7
Fusing within the system 1-44

G

Group start 1-102

H

Hardware structure 1-20
HART Interface 1-52 to 1-53
Heating element 2-18

I

Inspection and Test Record C-1
Intrinsic Safety Barriers 1-52

J
Jumpering - Overview 5-54

L
License Certificate C-1
Lifting instructions 2-18
Location of components D-1
Location-Oriented Item Designations D-3
Logic and Time Delays 1-97

M
Masterview 320 1-104
MasterView 800 Series 1-105
MasterView 800/1 1-105
Measuring 1-100
Memory
  Application Program Backup 1-26
  Power Supply Backup 1-26
  Size 3-58
  System Program Backup 1-25
Mimic panel 1-104
Module Termination Units 1-76
Modulebus 1-71
Motor control 1-102
Mounting planes D-1
MTUs 1-70, 1-76

N
Naming 3-74

O
Object oriented connection 1-49
Offline mode 4-1
Operation mode 4-1
Order Reference Sheet C-1
Outputs behavior at interrupts 1-107

P
P1, P2, -3, -4 4-1
PC element 1-92
Positioning 1-97
Primary processor module 4-1
Priority system 3-39
Product variants 1-24
Protective earth 2-8
Pulse counting 1-98

R
Release Notes C-1
Reports 1-99
Run/Alarm relay
  Description 1-108
  Electrical data A-46
  Installation 2-31

S
Safety switch 2-10
Safety system aspects 1-108
SD811 1-78 to 1-79
SD812 1-78 to 1-79
Selection of primary/backup processor module 4-3
Sequence control 1-97
Shut-down
  Automatic 2-52
  Emergency 2-50
  Manual 2-51
  Safety 2-50
Software structure 4-15
SU-modules D-3
Supervision 1-100
Supervisory inputs 1-110
  Electrical data A-46
  Installation 2-31
Support and Problem Reporting C-1
Swing frame D-1
System definition 3-72
System Log C-1

T
TB815 1-72
Terminal Diagram C-1
Termination Units 1-70
TU810 1-77
TU811 1-77
TU830 1-77
TU831 1-77
TU835 1-77
TU836 1-78
TU837 1-78
Type circuits 3-75

U
UPS, Uninterrupted Power Supply 3-10
User Defined PC Elements
  Application 1-94
  Program module 1-34

V

Valve control 1-102
VT100 terminal 1-105



3BSE 002 415R701 Rev A

March, 2000