Attn: Smiling
Mobile/WhatsApp/Wechat:+86 18050035902
E-mail: info@htechplc.com

PROCONTROL 08
Power Supply

Module for Monitoring and Flashing Voltages

89 NU01-E

Module Description

GKWE 705 291 E, edition 07.88

Application

The module for monitoring and flashing voltages 89 NU01 is used in the power supply subrack of each PROCONTROL multi-purpose processing station. It is used for monitoring the station power supplies, the cubicle temperature and the cubicle doors. It provides the annunciation voltage for monitoring the cubicles and is provided with amplifiers for two cubicle panel lamps and one cubicle row lamp. It is also the central flashing generator unit of a multi-purpose processing station.

Features

The module requires the following supply voltages:

USA and/or USB operating voltages +24 VDC.

The annunciation voltage UM is formed inside the module from the voltages USA and USB and is provided at the appropriate outputs and is short-circuit-proof.

The following voltages can be supplied as auxiliary voltages:

UVA and/or UVB operating voltages -24 VDC.

The contact inputs MSA, MSB, MSP, MTE and MTK are negatively biased with this negative voltage to increase the safety of the contacts.

Description

Flashing generator

The module contains a preceding oscillation circuit and a frequency divider connected behind. This generates the three flashing voltages BLM, BLS and BLL. These are the running light and flashing light voltages specified by DIN 19 235 for operating status display.

The frequencies (basic setting) of the flashing and running light voltages and their uses are described below:

BLM = 0.5 Hz for alarm annunciation systems,
Pulse-pulse off time ratio 1:1

BLS = 2 Hz for flashing disturbance light for drive and group controls or for displaying new value annunciations with alarm annunciation systems.
Pulse-pulse off time ratio 1:1

BLL = 8 Hz for displaying transient states (e.g. running state of actuator),
Pulse-pulse off time ratio 1:1

These three flashing voltages are provided at the appropriate module outputs. The outputs BLS and BLL can be switched over independently to the other flashing voltages (0.5 Hz; 2 Hz; 8 Hz) by means of jumpers inside the module.

Since every PROCONTROL multi-purpose processing station is provided with this module, it must be ensured that the appropriate flashing voltages of all modules have the same phase position (for uniform signalling in the control room).

The terminal SY is used for synchronizing all modules. It acts as an input and output.

The terminals SY of all flashing modules to be synchronized must be connected with each other.

The module with the highest flash frequency forces all other modules connected to emit a flashing light with the same frequency and phase position. If the synchronization signal fails due to a short circuit or an interruption, only the synchnronization is disturbed and not the flashing voltages at the outputs BLM, BLS, BLL.

Power supply monitoring

Each PROCONTROL multi-purpose processing station can have a 2-fold redundant power supply. Each main power supply must be monitored. These monitoring signals are registered by the module 89 NU01 via the inputs MSA (main power supply A) and MSB (main power supply B) and are evaluated by its annunciation logic (see ''Annunciation functions'').

The cubicle-internal power supply and power distribution (power supply modules and miniature circuit breakers) must also be monitored.

The general monitoring signal MSP is also registered and evaluated by the module 89 NU01.

All above mentioned disturbance signal inputs are activated via contacts (when UVA and UVB are connected) and are thus negatively biased inside the module at -24 V. The threee contacts themselves are supplied with the annunciation voltage UM.

Temperature monitoring

The cubicle temperature of the multi-purpose processing station can also be monitored with the module 89 NU01. There are two possibilities for monitoring:

— A temperature monitor can be connected to the negatively biased input MTE operating on the contact principle. It is also supplied by UM. The signal given when a certain temperature is exceeded (e.g. 68 °C) is evaluated by the annunciation logic.

— A temperature-dependent resistor can be connected to the inputs TE1 and TE2. An upper (68 °C) and lower (55 °C) limit temperature are then set inside the module by means of potentiometers. The output signals of the two comparison circuits are evaluated by the annunciation logic.

  Unused inputs TE1 and TE2 (when using a temperature monitor operated on the contact principle) must be short circuited.

Door monitoring

It is also possible to monitor unclosed cubicle doors of the multi-purpose processing station with the module 89 NU01.

For this, all the existing cubicle door contacts are connected in an OR circuit to the negatively biased input MTK. All door contacts are jointly supplied by the annunciation voltage UM. The input signal "One door open" (MTK) is evaluated by the annunciation logic.

Monitoring of the multi-purpose processing station

The module input MST is connected with the annuciation outputs MST of the modules 88 TK01 (in the multi-purpose processing station) and 88 VK01 (in the master station). These modules generate the general disturbance signal if one or several of the remaining station modules annunciate a disturbance. The input MST in the monitoring station is supplied with the voltage UM of the 89 NU01 via the contact loop x — y of the monitoring station annunciation module 88 UM01. In this case, it is possible to monitor for a module 88 UM01 that is not plugged in. All three possible disturbances are evaluated by the annunciaton logic of the module 89 NU01.

Annunciation functions

Annunciation functions on the module

A total of 11 light emitting diodes are located on the front of the module. They indicate operating status and the possible individual disturbances. They are activated by the annunciation logic.

The green light emitting diode UM emits a steady light for as long as the annunciation voltage UM is present at the module outputs.

The green light emitting diode BLM flashes at 0.5 Hz for as long as this flashing voltage is provided at the module outputs.

The green light emitting diode BLS flashes at 2 Hz for as long as this flashing voltage is provided at the module outputs (jumper on 2 Hz).

The green light emitting diode BLS flashes at 8 Hz for as long as this flashing voltage is provided at the module outputs (jumper on 8 Hz).

The red light emitting diode MST emits a steady light if a disturbance of the multi-purpose processing station is annunciated via the modules 88 VK01 or 88 TK01 or if the module 88 UM01 is not plugged in.

The red light emitting diode MSA emits a steady light if there is a disturbance in the power supply A.

The red light emitting diode MSB emits a steady light if there is a disturbance in the power supply B.

The red light emitting diode MSP emits a steady light if there is a disturbance in the power supply inside the cubicle or in the power distribution.

The yellow light emitting diode MTE> emits a steady light if the cubicle temperature has exceeded 55 °C (only when using a temperature-dependent resistor at TE1 and TE2).

The red light emitting diode MTE> emits a steady light if the cubicle temperature has exceeded 68 °C (with both methods of temperature monitoring).

The red light emitting diode MTK emits a steady light if one (or several) of the cubicle doors is (are) open.

Annunciations from the module

In addition to the optical annunciations, the annunciation logic generates a series of other annunciation signals which are provided at the appropriate module outputs.

All the monitoring input signals mentioned jointly activate the parallel outputs LMF1 and LMF2 via an amplifier. Two annunciation lamps can be connected (in the doors at the front and rear) to these outputs for each cubicle (with connections to reference conductor Z of module 89 NU01). These emit a steady light if one of the disturbances is recognized.

The outputs LMRA and LMRE are activated parallel to the LMF outputs via a relay. They are used to connect a cubicle row lamp to the last (or first) cubicle of a row. There are thus two possibilities here, the first one being provided in the standard design.

— The cubicle row lamp is supplied with the annunciation voltage UM and Z (for lamp preheating) via the module 89 NU01 of the last (or first) cubicle. It is connected with its second terminal in parallel with the LMRA outputs of all modules 89 NU01. The jumper A-B must be plugged in on all modules 89 NU01 for this. It sets up the connection inside the module to the reference conductor Z.

— If the jumper B-C is plugged into the modules 89 NU01, the cubicle row lamp can be activated by an external voltage supply ($U \leqq 30$ V, $I \leqq 0.5$ A).

The input signal MTK ("One door open") is provided additionally at the output MTKG. The annunciation "Cubicle temperature > 68 °C" is also provided at the output MTEG. Both signals are transferred to the station bus coupling module 88 TK01. This enters the information into its diagnostic telegram. In this way, these annunciations are available in the entire PROCONTROL bus system and can for example be evaluated in the control system operator station (ZBP1).

The three main supply disturbance annunciations MSA, MSB und MSP also actuate a relay via an amplification stage. The relay itself can be connected in two ways:

— with jumper G-H plugged in, there is an internal voltage supply of +24 V (Standard)

— with jumper H-J plugged in, the voltage supply can be external via terminal x.

This disturbance signal can also be output in two ways, the first one being the standard version:

— with jumper D-E plugged in, a "0" signal is present at the output MW when a power failure occurs. This is also transferred to the coupling module 88 TK01 and entered in this diagnostic telegram (closed-circuit principle).

— with the jumper E-F plugged in and an external voltage supply via terminal MW, the disturbance signal can be used for further evaluation (e.g. external annunciation lamp) via the terminals MO (NC annunciation contact) or MS (NO annunciation contact).

The internally formed annunciation "Temperature > 55 °C" is provided also at output MT in addition to the display (yellow light emitting diode). In this way for example, a fan can be switched on via a coupling relay R513.

The cubicle panel lamps (outputs LMF1/2) and the cubicle row lamp (outtput LMRA) can be switched on jointly via the lamp test inputs TL1 and TL2 for testing purposes.

Function diagram

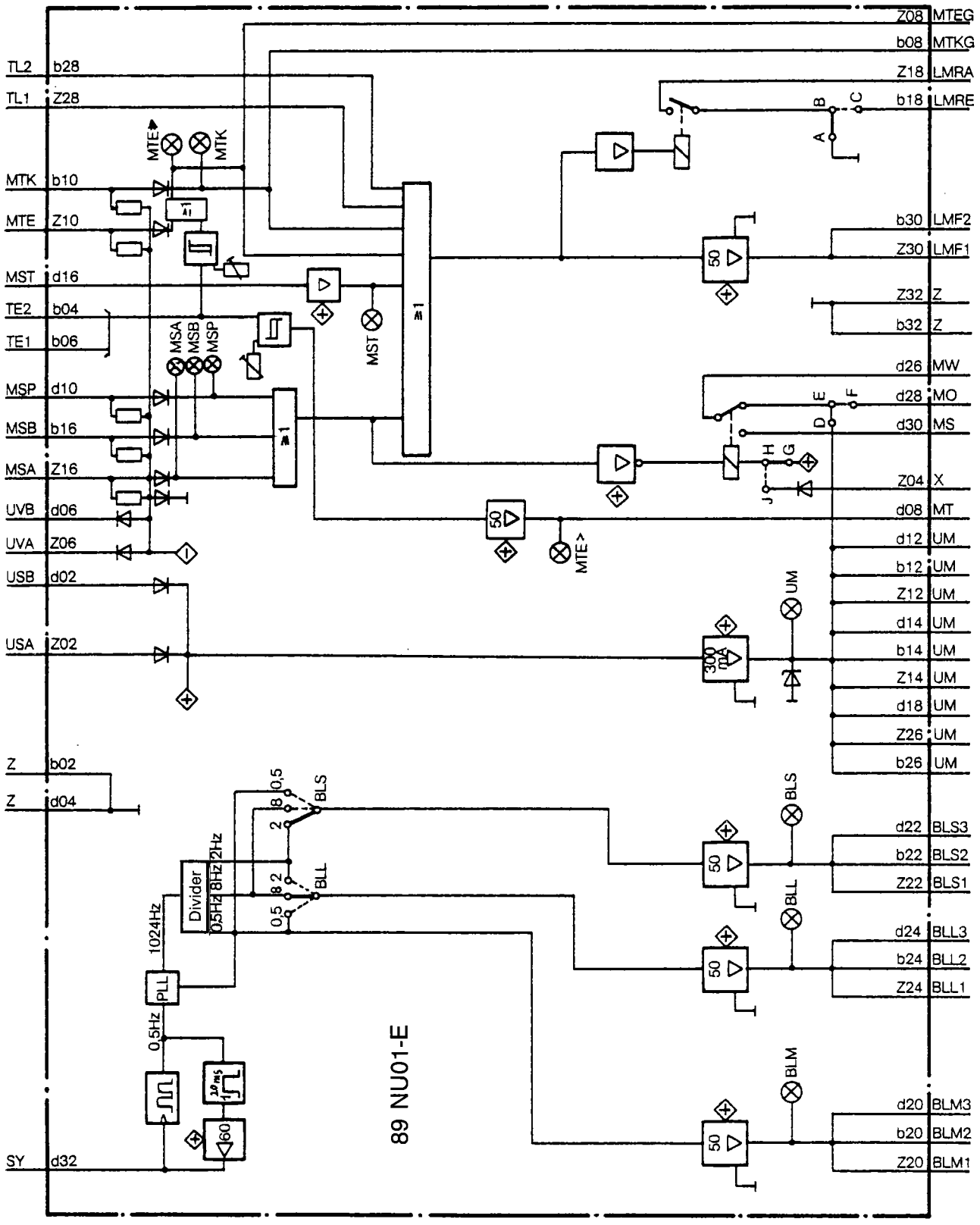

Connection diagram

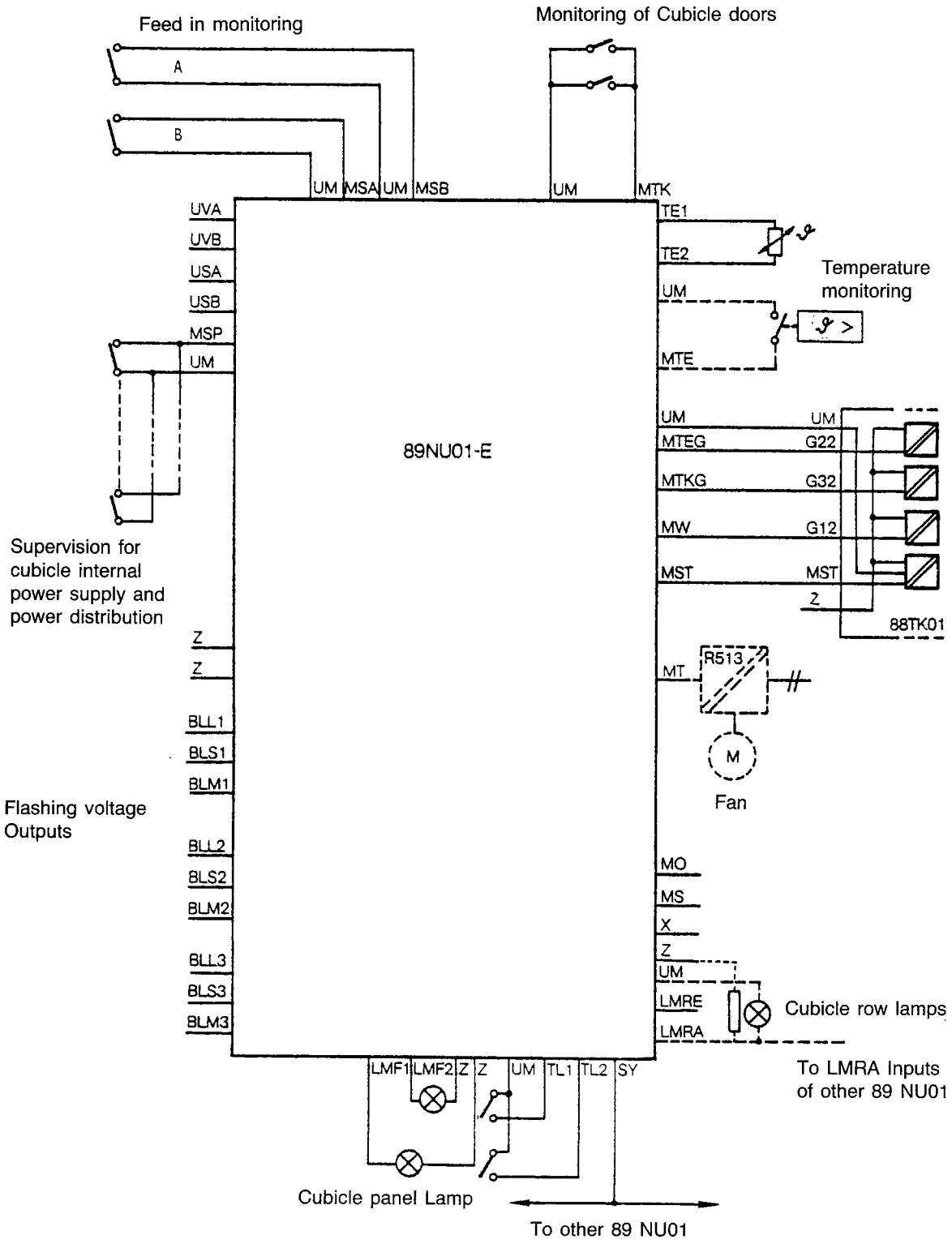

Mechanical design

Board size	: 3U, 1T, 160 mm deep
Connector	: to DIN 41 612 48-pole, edge connector type F
Weight	: approx. 0.2 kg without adapter * 0.27 kg with adapter *

* When using the master station or monitoring station, the module is extended to a depth of 220 mm by means of a plug-on adapter.

Position of jumpers on printed circuit board and front panel

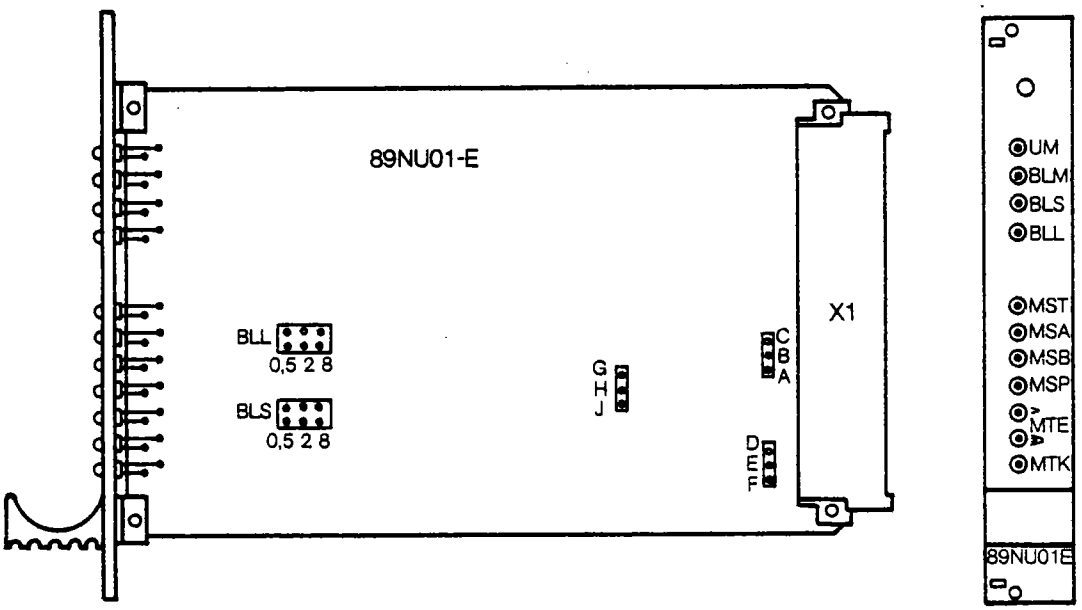

Technical data

In addition to the system data, the following values apply:

Power supply

Operating voltage USA, USB	US = +24 V
Auxiliary voltage UVA, UVB	UV = - 24 V
Current consumption	Is = 60 mA + Current at outputs UM, BLM1 ... 3 BLS1 ... 3, BLL1 ... 3, LMF1 ... 2, MT, MTEG, SY
	Iv = 16 mA (max.)
Power dissipation	P = 2.2 W
Z reference potential	

Input values

LMRE	— Cubicle row annunciation lamp (with jumper B-C)	U ≦ 30 V I ≦ 0.5 A
MO	— NC annunciation contact "Voltage supply O.K." (with jumper E-F)	U ≦ 60 V≅ I ≦ 0.5 A
MS	— NO annunciation contact "Voltage supply O.K."	U 60 V≅ I 0.5 A
MSA	— "Main power supply A disturbed"	I = ≦ 5 mA (contact input)
MSB	— "Main power supply B disturbed"	I = 5 mA (contact input)
MSP	— "Power supply disturbed"	I = 5 mA (contact input)
MST	— "Disturbance annunciation from multi-purpose processing station"	I = 1.6 mA (1NL)
MTE	— "Temperature in cubicle too high" (for contact thermometer)	I = 5 mA (contact input)
MTK	— "Door open"	I = 5 mA (contact input)
SY	— Flashing generator synchronization only for connection with terminals SY of other 89 NU01	I = 1.6 mA (1NL)
TE1,TE2	— Terminals for temperature-dependent resistor, short circuiting of inputs necessary if they are not used Resistance at +20 °C: 1500 Ω ± 0.25 % Tolerance range +20 °C ... 50 °C: ± 0.5 Ω/K Temperature coefficent range 0 ... 70 °C: 6.82 Ω/K (Compensation resistor XP 8670)	
TE1,TL2	— Test input for lamps LMF1, LMF2	I = 1.6 mA (1NL)

Output values

BLM 1,2,3	— Annunciation flashing voltage 1,2,3 Sum of output load capacities at terminals B20, D20, Z20; Frequency 0,5 Hz	50 NL
BLS 1,2,3	— Disturbance flashing voltage 1,2,3 Sum of output load capacities at terminals B22, D22, Z22; Frequency 2 Hz (Changeover switch for 0.5 Hz or 8 Hz)	50 NL
BLL 1,2,3	— Running light voltage 1,2, Sum of output load capacities at terminals B24, D24, Z24; Frequency 8 Hz (changeover switch for 0.5 Hz or 2 Hz)	50 NL
	Frequency accuracy of each flashing voltage	± 20 %
LMF1.2	— Cubicle annunciation lamp sum of output load capacities B30, Z30	Ia ≧ 100 mA
LMRA	— Cubicle row annunciation lamp permissible	U ≧ 30 V I ≦ 0.5 A
MT	— Annunciation output: "Temperature above lower limit value (55 °C)" (e.g. for fan)	50 NL
MTEG	— Annunciation output: "Temperature above upper limit value (68 °C)"	10 NL
MTKG	— Annunciation output: "Door monitoring responded"	10 NL
MW	— Annunciation contact "Power supply O.K."	U ≤ 60 V≅ (with jumper E-F) I ≤ 0.5 A
SY	— Synchronization of flashing generators Only for connection with terminals SY of other 89 NU01	60 NL
UM	— Annunciation voltage	Ia ≦ 300 mA

Temperature setting values

Lower limit value MTE >	55 °C ± 1.5 °C
Upper limit value MTE ≫	68 °C ± 1.5 °C
Disengaging value approx.	
with: MTE >	3 °C
MTE ≫	5 °C
Hysteresis: MTE >	4 °C ± 0.5 °C
MTE ≫	6 °C ± 1 °C

(when using nickel resistor HZLP 410 858 P7802)

Ordering data

Module 89 NU01	: GJR2 32 91 00 R1
Adapter board	: GJR2 33 07 00 R1

Technical data are subject to change without notice.



ABB Kraftwerksleittechnik GmbH

P. O. Box 100351, D–68128 Mannheim
Phone (0621) 381 2712, Telefax (0621) 381 4372
Telex 462 411 107 ab d

Printed in Germany (PPC/R11 0898 BSV)