Attn：Smiling
Mobile/WhatsApp/Wechat:+86 18050035902
E-mail: info@htechplc.com

PROCONTROL P

Analog Control

Control Module

For Analog Control Functions with Continuous Output, 1- and 2-fold

83SR07-E/R1010

Module and Application Description

1KGF 100441, Edition 08/05

Application

The module is used for stored-program control of one or two process variables. The module has two continuous outputs for outputting the correcting variables. The following types of actuators (positioners, servo-drives) can be activated:

- Electrohydraulic motor-driven actuators
- Electropneumatic actuators
- Electric-motor-driven actuators

The positioning of the actuators is controlled locally, via the converter, or, in the case of the electric-motor-driven actuators, by a continuously operating power electronic system. In addition to single-variable control, it is possible to implement a higher-level master control.

The module is intended to be used in combination with the process operator station.

The module includes the function blocks needed for implementing continuous single-variable controllers. Other function blocks are available for signal conditioning.

In analog control mode, the module is used with a fixed cycle time, i.e. 100 msec for one actuator and 200 msec for two actuators. It is also possible to preset a cycle time of 50 msec.

The cycle time is specified by means of KON function block which is the first block to be listed in the structure list.

The module incorporates two hardware process interfaces for the power controller units and for the process.

Features

The module can be operated in any PROCONTROL station with an external power supply unit.

The module address is set automatically when the module is plugged into the PROCONTROL station.

The telegrams received over the bus are checked by the module for error-free transmission, based on their test flags.

The telegrams sent from the module to the bus are marked with test flags. This way, error-free transmission is ensured.

The user program is stored in a nonvolatile memory (EEPROM). Loading and changing the user program is done from the PDDS via the bus.

The module is ready for operation if a valid user list has been loaded.

For communicating with the process and the power controller, the module uses the following type of voltage:

US operating voltage +24 V,

internally branched into:

UK1	supplying the contacts of process interface 1
UK2	supplying the contacts of process interface 2
S11/S13	supplying the transducers of process interface 1
S21/S23	supplying the transducers of process interface 2

The voltages are short-circuit-proof and non-interfering.

Operating voltages and external logic signals are based on reference conductor Z.

Disturbances are indicated by an LED on the module front:

ST	Disturbance

Signal lamp ST indicates module disturbances and whether data communication with the module is active.

Module design

The module essentially consists of:

- Process interfaces
- Station-bus interface
- Processing section

Process interfaces

In the process interfaces, the process signals are adapted to the internal signal level.

Station-bus interface

In the station-bus interface, the module signals are adapted to the bus. This is primarily a parallel/serial conversion.

Processing section

For processing the signals coming from the process and the bus, the module is equipped with a microprocessor which works with the following memory areas using an internal bus:

Contents	Storage medium
Operating program	EPROM
Function blocks	EPROM
User program (structure, address, parameters, limit value and simulation list)	EEPROM
User program (structure, address, parameter, limit value and simulation list)	RAM
History values	RAM
Current module input and output signals (shared memory)	RAM

The operating program enables the microprocessor to perform the operations of the module.

The memory for the function blocks contains the software modules needed for implementing the different functions.

All the function blocks, their inputs and outputs, can be called by the user via the programming, diagnosis and display system (PDDS).

The memory for the user program contains information on:

- How the function blocks are interlinked,
- Which module inputs and outputs have been allocated to which inputs and outputs of the function blocks,
- Which fixed values have been specified for individual inputs of the function blocks,
- Which parameters have been specified for the individual inputs of the function blocks,
- Which plant signals have been allocated to the module inputs and outputs,
- Which function blocks serve the process interfaces,
- Which limit values sets have been allocated to the analog values, and
- Which function results, module input and output signals have been simulated.

This information is defined by the user, depending on the system specifics.

The entire user program is stored in an EEPROM for normal operation. For optimization purposes, a modified copy of the user program can be used in the RAM. This program is then imported into the EEPROM after the optimization operations have been completed.

The settings can either be preset directly by the user at the respective function block inputs or be listed in a separate parameter list.

If limit signals are formed by means of the GRE function block, the limit values (4 for each GRE) will be maintained in a limit value list.

Parameter lists and limit value lists may be changed at any time during operation (on-line). In that case, they are — depending on RAM or EEPROM mode — stored in the RAM or in the EEPROM.

The exchange of information between the module and the bus system takes place via the memory for the module's input and output signals. This memory is used for buffering the signals.

Structuring

For structuring, the neutral inputs and outputs of the individual function blocks are assigned certain module inputs and outputs, or the inputs of the function blocks are assigned fixed values and parameters or outputs of other function blocks (function results). Structuring is performed on the basis of data supplied by the user in the form of a so-called structure list.

For structuring, the following limit values of the module need to be taken into consideration:

- Max. number of module inputs 287
- Max. number of simulatable function results, module inputs and outputs 32
- Max. number of module outputs 223
- Max. number of function results 255
- Max. number of timers 136
- Max. number of parameters 80
- Max. number of limit value sets 16
- Max. number of ASP drive control functions 2
- Max. number of lines in the structure list 2823
- Length of history value list (bytes) 1024
- Size of shared memory (cf. "Addressing")

A line is understood as one entry on the PDDS.

For the precise procedure of structuring the function blocks, please refer to the respective function block descriptions.

Addressing

General

Signal exchange between the module and the bus system takes place via a shared memory. In this shared memory, incoming telegrams which the module is to receive and function results which are to leave the module, are buffered.

For this purpose, the shared memory includes send registers for telegrams to be sent and receive registers for telegrams to be received. Register numbers 0 through 63 are defined as send registers, and register numbers 64 through 199 are defined as receive registers.

The allocations of the module input and output signals to the registers of the shared memory are defined as specified by the user via the PDDS.

The user data are contained in address lists.

Address list for module inputs

In the address list for module inputs, each module input is assigned the send-location address or the process interface of the signal to be received.

In the case of module inputs that receive their signals over the bus, addressing is done by allocating the send-location address to EGn, e.g.:

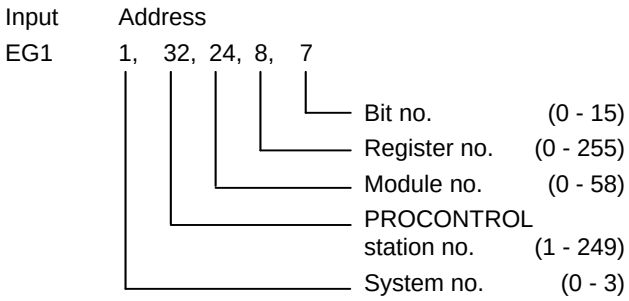

In the case of module inputs that receive their signals via the process interface, addressing is done by allocating the process interface to EGn. In this case, a distinction is to be made between contact inputs (VPn) and analog inputs (VAn), e.g.:

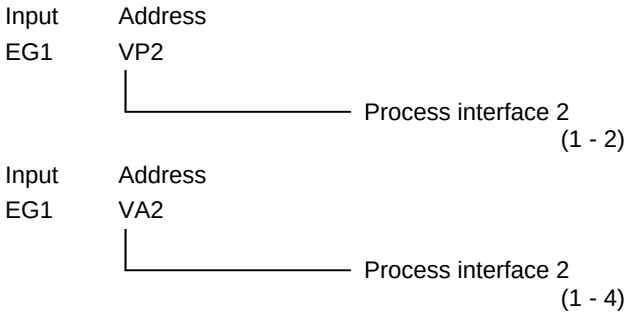

VAn allocation:

VA1:	Analog input	E11 of	process interface	1
VA2:	Analog input	E21 of	process interface	2
VA3:	Analog input	E13 of	process interface	1
VA4:	Analog input	E23 of	process interface	2

In the case of module inputs which receive their signal from the process operator station (POS), addressing is done by allocating L to EGn, e.g.:

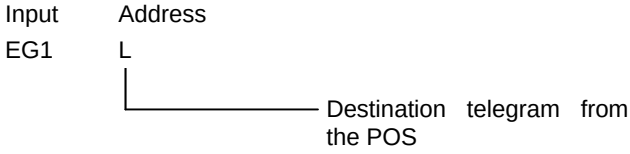

The address list for inputs is translated by the PDDS into two internal lists, the “Bus address list“ and the “Module inputs allocation list“.

The bus address list contains, for all the telegrams to be used by the module, the send-location address and the receive register number.

Telegrams received, whose addresses are contained in the bus address list, are registered in the receive register of the shared memory. Telegrams received, whose addresses are not contained in the bus address list, are ignored by the module.

The "Module inputs allocation list" contains the associated receive register number for each module input and, in the case of binary values, the bit position.

Address list for module outputs to the bus

In the address list for module outputs, a send register is defined for every signal which is to leave the module, and in the case of binary signals, a send bit is defined in addition, e.g.:

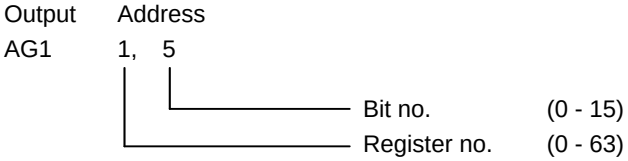

Addressing of the process interface for the outputs

In the case of module outputs that issue their signal to the process interface, addressing is done in the structure list by allocating AAn (analog outputs) and APn (drive releases), n being the number of the process interface, e.g.:

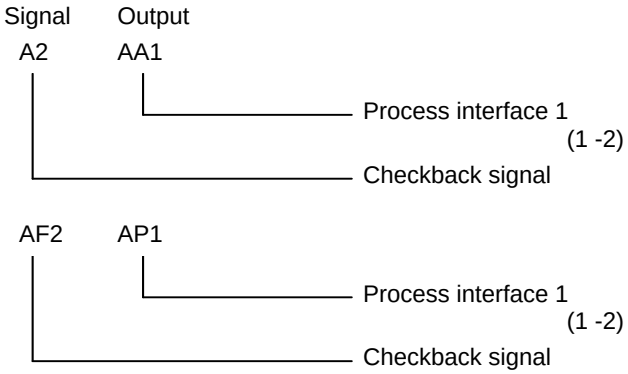

Address formation

System address and station address are set at the station bus coupling module or at the station-bus control module and are transferred by that module to all the modules of the relevant PROCONTROL station.

The module addresses are defined through the connections on the backplane so that the modules are adjusted automatically when being plugged into a slot.

Limit value list

The limit value list contains 4 limit values, each for a maximum of 16 GRE function blocks (limit signal generation for an analog value). The list is stored in the EEPROM and — for RAM mode — in the RAM.

The PDDS can always be used to change the limit value list via a “job memory“ (RAM). Such changes are stored in the EEPROM in the case of EEPROM mode, or in the RAM in RAM mode.

When the user lists are transferred from the RAM to the EEPROM, and vice versa, the limit value list is transferred as well.

Parameter list

The parameter list contains up to 80 values for parameters of the function blocks. It is handled and saved like the limit value list.

Simulation list

The PDDS can be used to overwrite and "simulate" a maximum of 32 module signals (function results, module inputs and module outputs). This simulation list is handled and saved like the limit value list.

Event generation

For each system cycle, the module is prompted once by the PROCONTROL system to send the data stored in the send registers of the shared memory.

If values change, this fact is treated like an event.

The module recognizes the following conditions as an event:

- Change of a binary value
- Change of an analog value by a fixed threshold of 0.39 % and expiration of a timeout of 200 msec since the last transmission (cyclically or per event).

As soon as an event occurs, the cyclic mode is interrupted and the new values are given priority and transmitted to the bus.

Disturbance bit evaluation, receive monitoring function

The telegrams received over the bus may have a fault flag set in bit position 0. The fault flag is generated by the sending module based on plausibility checks and is set to "1" if specific disturbances occur (cf. the relevant module or function block descriptions).

In order to be able to recognize errors in signal transfer, the module includes a feature that monitors the input telegrams for cyclic renewal. If a signal has not been updated for a particular period of time (e.g. on account of a failure of the sending module), the bit of position 0 in the assigned receive register of the shared memory will be set to "1". At the same time, all binary values are set to "0" in binary value telegrams. In the case of analog values, the previous value is retained.

A set disturbance bit does not automatically trigger a reaction in the module. If the disturbance bit of a telegram is to be evaluated, this must be taken into consideration when structuring.

The disturbance bits of received telegrams can only be used internally. They are not included in telegrams to be sent.

Diagnosis and annunciation functions

Disturbance annunciations on the module

Disturbances are indicated by an LED on the module front:

	LED designation
- Disturbance	ST

Light-emitting diode ST indicates all module disturbances and data communication disturbances involving the module.

Disturbances of the process interface

Monitoring is limited to structured process inputs and outputs.

Disturbances are indicated by light-emitting diode ST and diagnosis register message 'Process channel fault'. In addition, a disturbance bit is set in the respective receive register.

Disturbance signals to the annunciation system

The annunciation system or the control diagnosis system CDS receive disturbance signals from the control module over the bus.

Diagnosis

Inside the module's processing section, the telegrams received and the formation of the telegrams to be sent, as well as the internal signal processing functions are monitored for fault-free condition (self-diagnosis).

In the event of a disturbance, the fault type is written into the diagnosis register and a disturbance signal is sent to the PROCONTROL system.

Upon request, the module sends a telegram containing the data stored in the diagnosis register (register 246) (cf. figure 1).

The contents of the diagnosis register, the message on the general disturbance line, the messages on the CDS, and the ST lamp are shown in figure 1.

If the "Process channel fault" message is indicated in the diagnosis register, this may be due to one of the following reasons:

- Short-circuit at outputs UK1, UK2, AF1, AF2, S11/S13 or S21/23
- Analog input value not plausible, i.e. the values are smaller than -6.25 % or greater than 150 %
- Wire break at analog outputs AY1 or AY2, in a configuration for 4 ... 20 mA

If the "Processing fault" message is indicated in the diagnosis register, this may be due to one of the following reasons:

- Invalid structuring
- Relay driver for the analog inputs or outputs of function unit 1 (E11/E12, E13/E14, AY1) or function unit 2 (E21/E22, E23/E24, AY2) defective
- Analog section for analog outputs AY1 or AY2 defective
- Internal module voltages disturbed
- Disturbance of the internal reference values of the analog inputs and outputs

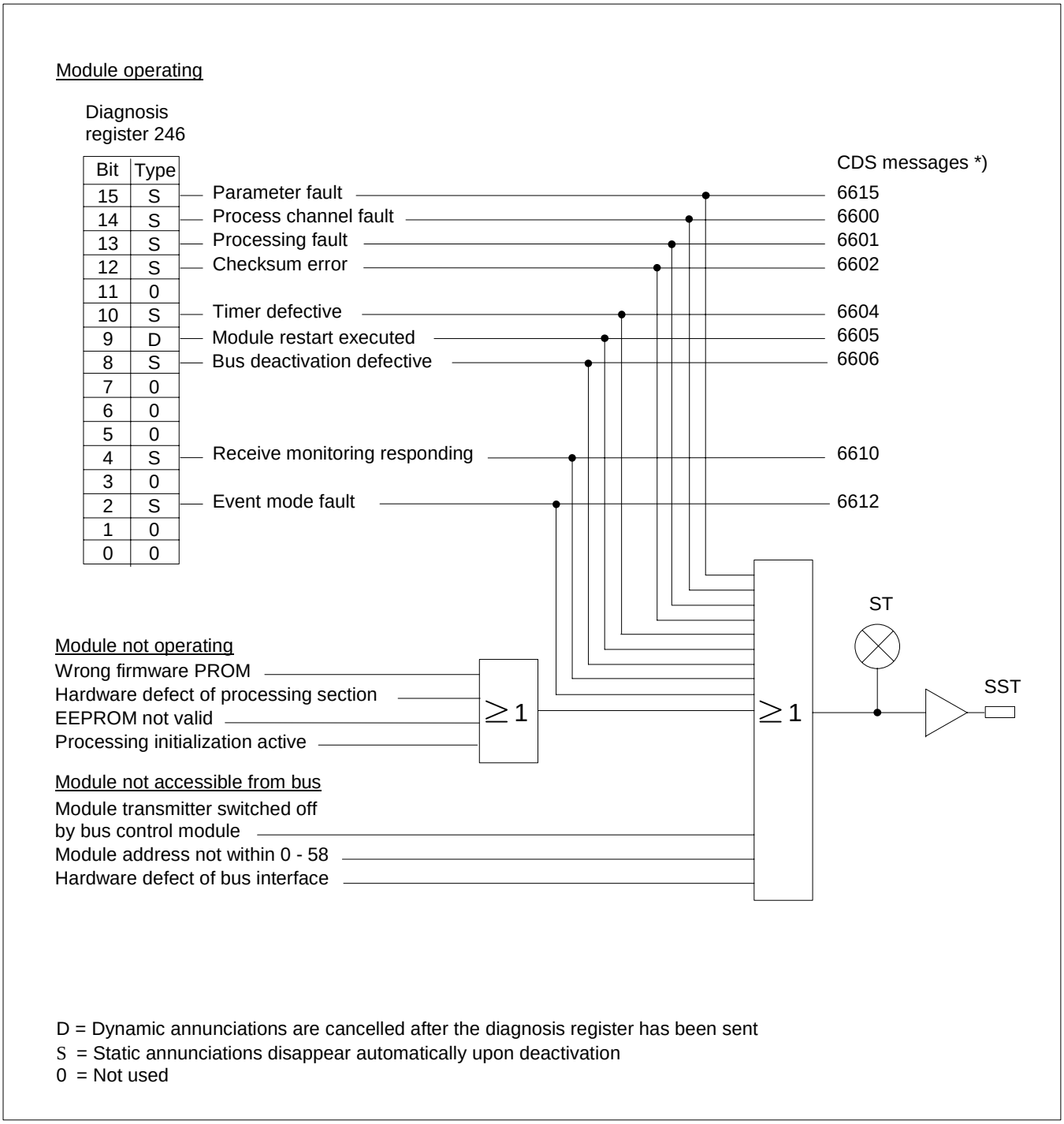

Figure 1: 83SR07/R1010 diagnostic messages

*) The control diagnosis system (CDS) provides a description for every message number. Among other data, this description contains:
- Information on cause and effect of the disturbance
- Recommendations for elimination of the fault.

This ensures quick elimination of a disturbance.

Operating states of the module

Initialization and bootstrapping with user lists

Initialization takes place either when the module is plugged in or upon connection to supply.

The initialization procedure sets the module to a defined initial state. During initialization, disturbance light-emitting diode ST is on.

When the module is started up for the first time, there is no user program available; the module indicates "Processing fault“ and disturbance light-emitting diode ST is illuminated.

First, the user program is transferred from the PDDS via the bus into the RAM of the module. If this operation is started with the structure list, the PDDS will call the other lists automatically. For each transmission, the PDDS checks slot and address in order to prevent that the wrong lists are transferred. The module checks each incoming list for plausibility.

Now, the entire user program can be transferred into the EEPROM upon a PDDS command.

After that, the module is ready for operation and disturbance light-emitting diode ST goes off.

Normal operation

The module processes the user program stored in the EEPROM.

During normal operation, the signals coming from the bus and the process interfaces are processed in accordance with the instructions contained in the structure list.

In line with these instructions, commands are issued to the power controller and checkback signals indicating the process status are transmitted via the bus.

Modifying the parameter and limit value lists

Parameters and limit values can be changed from the PDDS (cf. “Limit value list“ and “Parameter list“).

Modifying the structure and address lists

Structure list and address list can be transferred from the module into the PDDS, changed there, and transferred back to the module. The procedure below should be followed:

- The module should be in EEPROM mode.
- Copy the list to be modified from the EEPROM (or RAM) onto the PDDS and make the changes.
- Retransfer the modified list into the RAM of the module.
- Switch the module from EEPROM mode to RAM mode using PDDS command “SWI“, and test the new list
- If you wish to make another change, go back to EEPROM mode and repeat the procedure.

Upon successful completion of the test, the entire user program can be transferred from the RAM into the nonvolatile EEPROM, using the following commands:

- PDDS command “Save“ (SAV) or
- PDDS commands “Copy from RAM to EEPROM“ (COP) and “Switch over from RAM to EEPROM“ (SWI)

“Save“ copies the lists and automatically switches to EEPROM mode without impairing the processing on the module or the output of commands.

Following changeovers with the SWI command (from RAM to EEPROM and EEPROM to RAM), the user lists in the RAM and in the EEPROM are compared. If a discrepancy is found, the controllers are switched to "Manual" mode, memory and timer elements are reset, the commands pending at the process interface are deactivated, and the module stops sending send-location telegrams. In the case of changed addresses at module inputs (EGn), the associated shared memory entries are set to zero until new data are received for the first time after switchover. If the lists are identical, processing will not be interrupted.

Simulation

The PDDS can be used to specify constant values for a maximum of 32 individual module signals. In EEPROM mode, these simulation data are stored in the EEPROM and in RAM mode they are stored in the RAM.

When the user lists are transferred from the RAM into the EEPROM and vice versa, the simulation data are transferred as well.

Changeovers between the RAM and the EEPROM do not affect the simulation lists.

When a simulation is cancelled from the PDDS, the simulation data are deleted from the active memory (EEPROM/RAM) and the module continues to operate with the data received over the bus or with the values generated.

Command functions

Activation from the control room

The module has no hard-wired control room interfaces; activation is effected over the bus.

Activation from a higher-level automatic system

A higher-level automatic system controls the module over the bus.

Protection commands

The logic links for protection commands are defined depending on the plant specifics.

Actuator release

Output AF (actuator release) for the power electronics is set automatically to "1" if the initialization phase of the module is completed and a mode-dependent release has been issued by drive control function ASP.

Checkback signals from the process and analog input

In the case of drive control functions, the actuator-related checkback signals from the process can be connected via the hardware inputs of the module (cf. Function diagram or Connection diagrams).

The two analog inputs of a process interface are intended for internal purposes only and must be connected to the respective inputs of the drive control function ASP.

Analog output

The position setpoints are issued from analog outputs AY1/Z11 and AY2/Z21. For adapting the position setpoint to the direction of the control action of the positioner, this output can be reversed during the structuring process.

Module configuration

Setting the operating mode

The operating mode (REG) and the respective module cycle time are defined in the KON function block which must be listed at the top of the structure list, followed by TXT text elements for function designations.

Operating mode	Module cycle time	KON input
Analog control	Fixed: 50, 100, and 200 msec	REG, x x =50 msec x =100 msec x =200 msec

The module cycle time is determined by the number and the type of function blocks entered in the structure list. The cycle times indicated as "fixed" are minimum times. They apply if the times resulting from the structure list are shorter.

The time actually required is stored in register 205 and can be read from the PDDS.

The following functions can be implemented for each module:

- 2 ASP drive control functions

The module cycle time has to be taken into consideration.

The 2 process interfaces of the module are assigned to the ASP drive control functions.

The module is connected to the control room via the process operator station.

Setting the system hum filters

The system hum filter is defined in the KON function block, jointly for all analog inputs.

PDDS display	PDDS entry	Remarks
FIL	0	OFF
	or 16	16 2/3 Hz
	or 50	50 Hz (default setting)
	or 60	60 Hz

Setting the analog inputs and outputs

The configuration is defined in the KON function block. The first entry for an analog input or analog output is allocated to process interface 1 and the second entry is allocated to the process interface 2.

For example:

PDDS display	PDDS entry	Remarks
B01	= EIN, 0	Analog inp. 1 (VA1) E11 0 ... 20 mA
B02	= EIN, 4	Analog inp. 2 (VA2) E21 4 ... 20 mA
B03	= EIN, 4	Analog inp. 3 (VA3) E13 4 ... 20 mA
B04	= EIN, 0	Analog inp. 4 (VA4) E23 0 ... 20 mA
B05	= AUS, 4	Analog outp.1 (AA1) AY1 4 ... 20 mA
B06	= AUS, 0	Analog outp.2 (AA2) AY2 0 ... 20 mA

Setting the jumpers

Jumpers X200 ... X203 are used to set the type of analog value transmitter connected to the analog input.

When X20n is plugged in, the analog input is non-floating and can be used to connect 2-wire transducers supplied from the module.

When X20n is not plugged in, the analog input is floating and can be used to connect 2-wire transducers which are supplied from the module or are externally supplied.

n within 0 and 3.

Function blocks for analog control mode (REG)

In this operating mode, the function blocks are available for analog control tasks for single-variable and master control functions.

In this operating mode, no disturbance bits are sent for analog values, except at the output of the GRE function block.

The module cycle time can be specified in increments, as a fixed minimum time (cf. Entries into the KON configuration element).

The function blocks generally referred to above are given an index in the following list (if used here).

Function block	**Abbrev.**
BINARY FUNCTIONS	
Switch-off delay element	ASV
2-out-of-3 selection, binary	B23
Extended bit marshalling	BRA2
Dynamic OR gate	DOD
Switch-on delay element	ESV
Monostable flip-flop "break"	MOA
Monostable flip-flop "constant"	MOK
OR gate	ODR
RS flip-flop	RSR
AND gate	AND
Selector switch, 4-fold	WS41
DRIVE CONTROL	
Drive control function "Proportional output with extended capabilities"	ASP1
LIMIT SIGNAL ELEMENTS	
Limit signal for upper limit value	GOG
Limit signal generation	GRE
Limit signal for lower limit value	GUG

Function block	**Abbrev.**
ANALOG FUNCTIONS	
Absolute value generator	ABS
Limiter	BEG
Divider	DIV
Function generator	FKG
Integrator (with integrator stop)	INT1
Factor variation	KVA
Maximum value selector	MAX
Minimum value selector	MIN
Multiplier	MUL
Monitoring and select function	MVN
Differentiator	PDT
Delay element	PT0
Delay element	PT1
Square root extractor	RAD
Summing multiplier	SMU
Disturbance bit suppression	SZU
Time variation	TVA
Change-over switch	UMS
ANALOG CONTROL	
Auto/Manual station	HST1
PID controller (with integrator stop)	PID3
PI controller (with integrator stop)	PIR3
P controller	PRE
Setpoint integrator	SWI1
PUSHBUTTON SELECTION FUNCTIONS	
Pushbutton selection	TAW
Pushbutton selection with target value presetting	TAZ
ORGANIZATION FUNCTIONS	
Configuration element for operating mode setting	KON
Text element	TXT

The detailed specifications of the function blocks as well as the procedure of structuring are described in the relevant function block descriptions.

Function diagram

Terminal designations:

The printed-circuit board is equipped with connectors X21 and X11.

Connector X21 contains all the process inputs and outputs. Connector X11 contains the standard station bus interface and the operating voltages for the module.

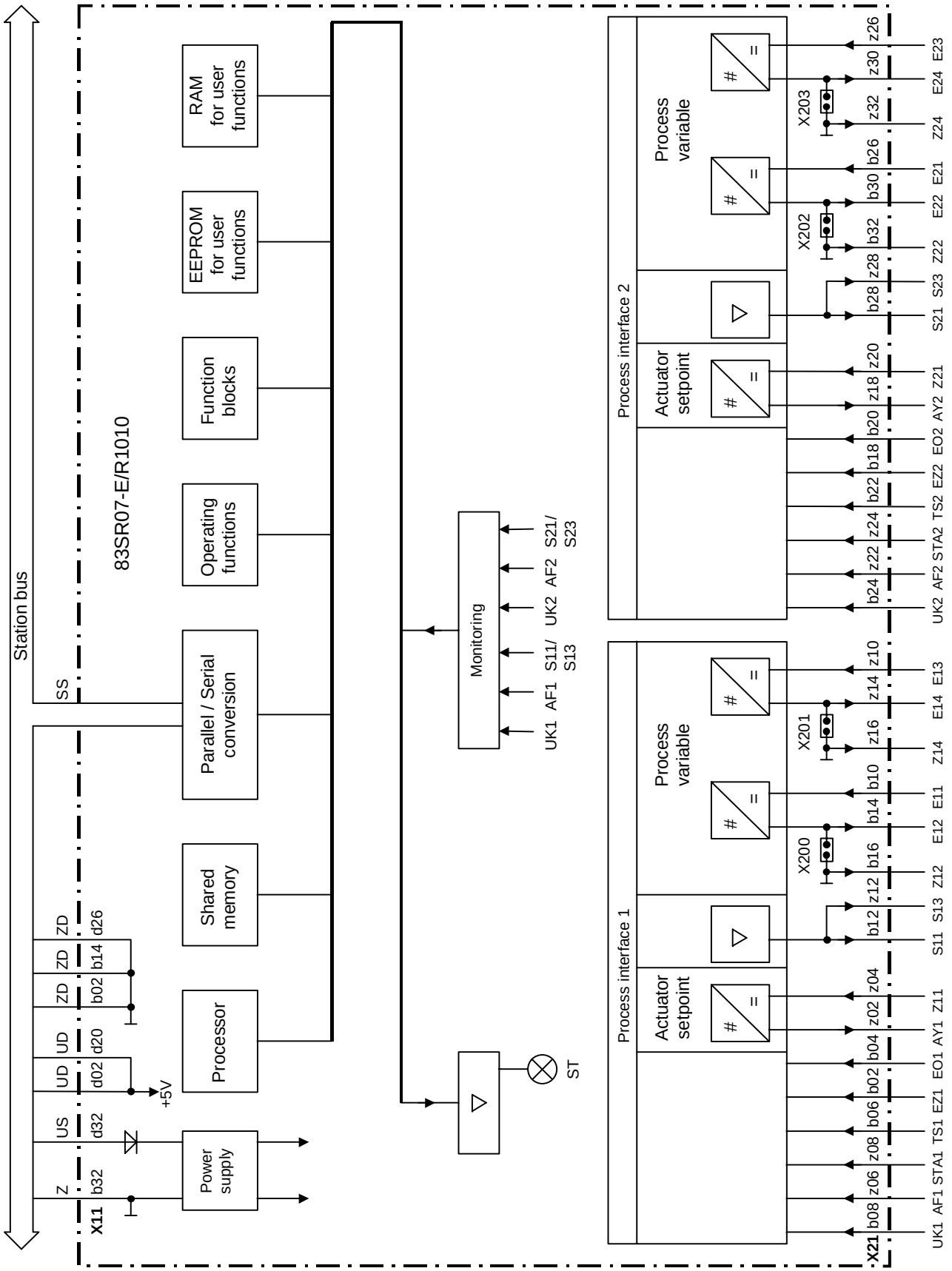

Connection diagram for an electrohydraulic or electropneumatic actuator (process interface 1)

2-wire transducer

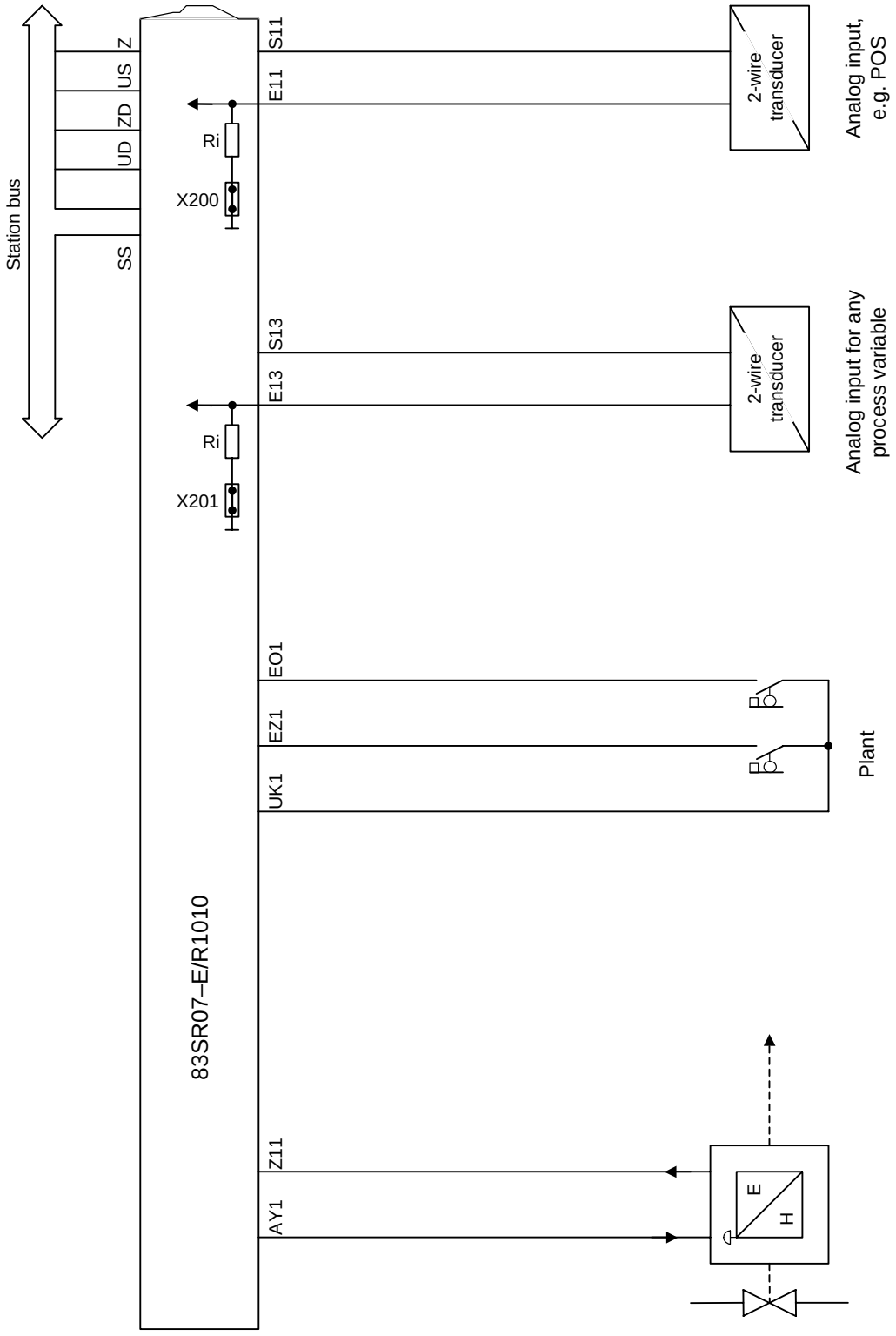

Connection diagram for an electric-motor-driven actuator (process interface 1)

2-wire transducer

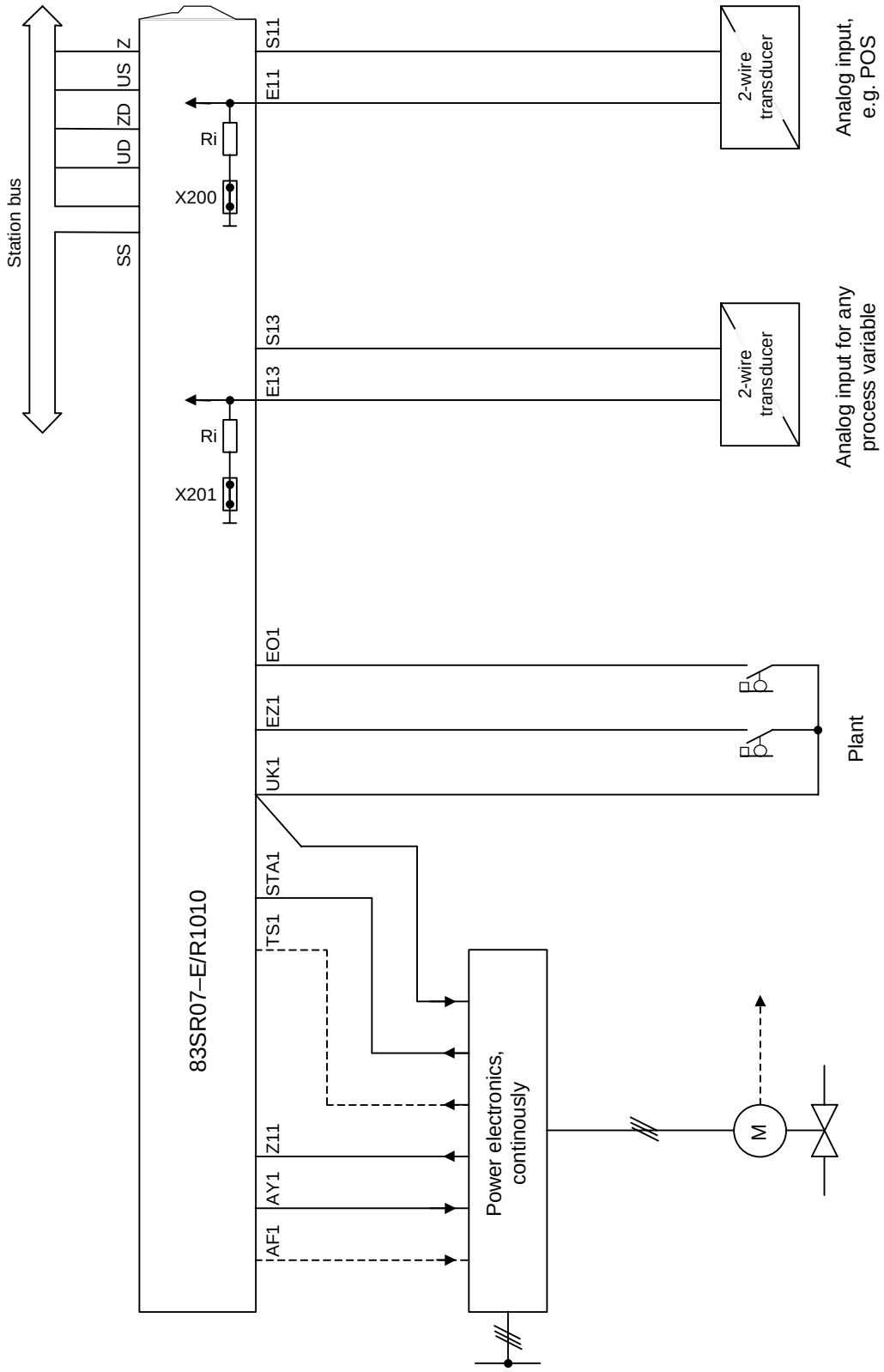

Connection diagram for an electrohydraulic or electropneumatic actuator (process interface 1)

4-wire transducer

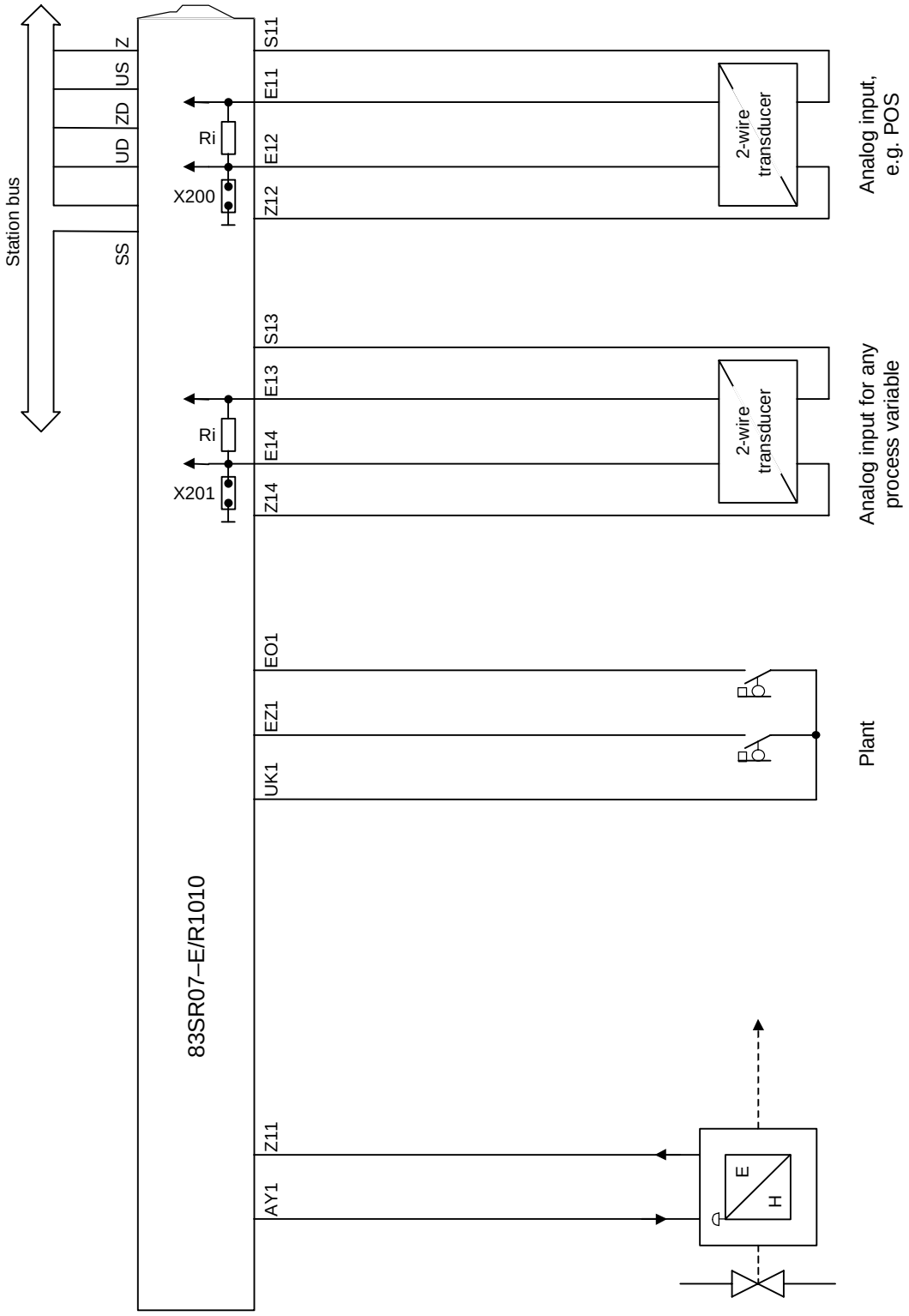

Connection diagram electric-motor-driven actuator (process interface 1)

4-wire transducer

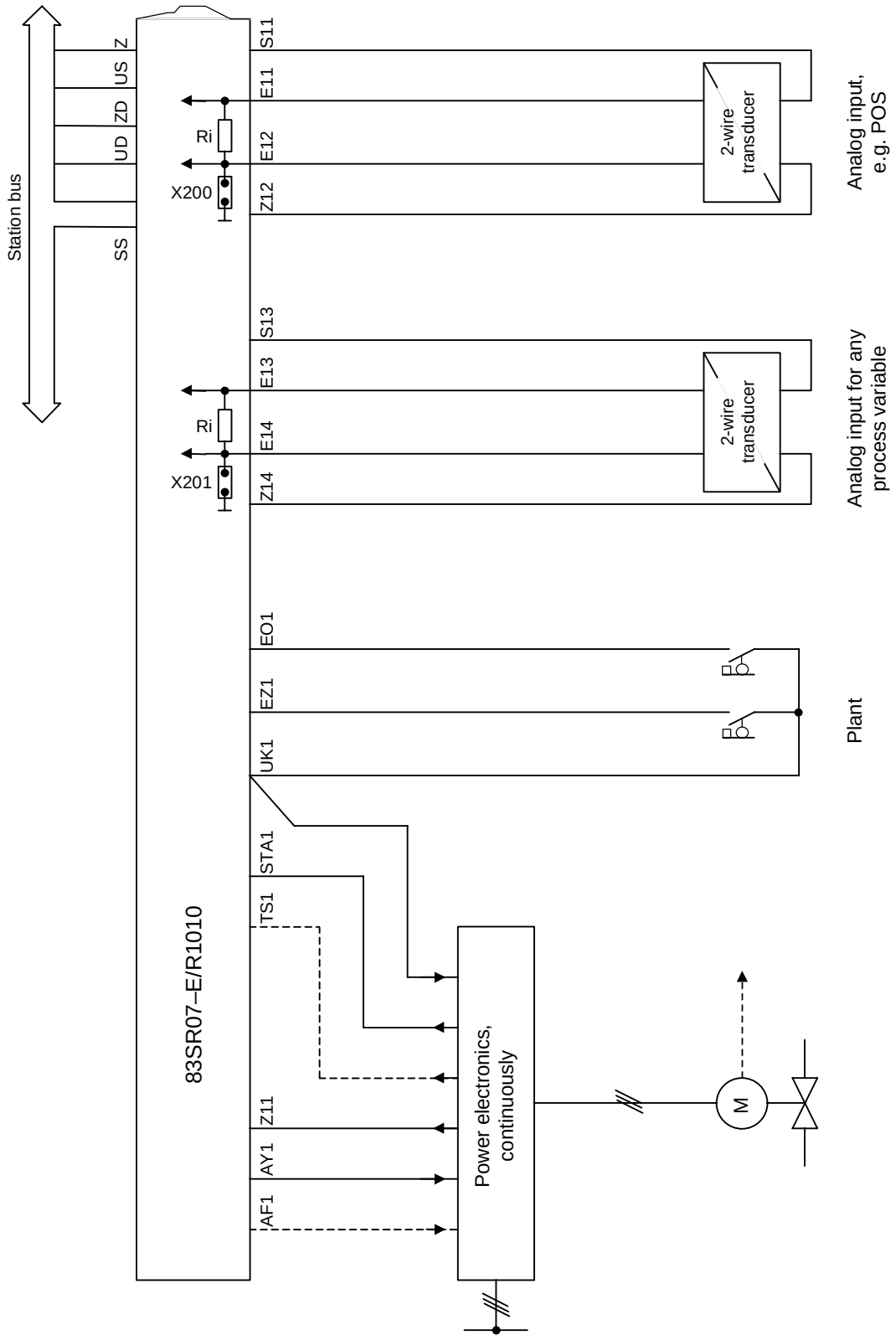

Mechanical design

Board size: 6 units, 1 division, 160 mm deep

Connector: to DIN 41 612

1 x For station bus connection, 48-pin edge-connector, type F (connector X11)

1 x For process connection, 32-pin edge-connector, type F (connector X21)

Weight: approx. 0.6 kg

View of connector side:

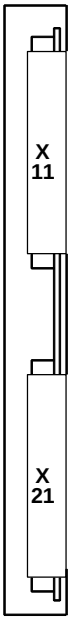

Contact assignments of the X21 process connector

View of contact side:

	b	*z*
02	EZ1	AY1
04	EO1	Z11
06	TS1	AF1
08	UK1	STA1
10	E11	E13
12	S11	S13
14	E12	E14
16	Z12	Z14
18	EZ2	AY2
20	EO2	Z21
22	TS2	AF2
24	UK2	STA2
26	E21	E23
28	S21	S23
30	E22	E24
32	Z22	Z24

Side view and view of the module front

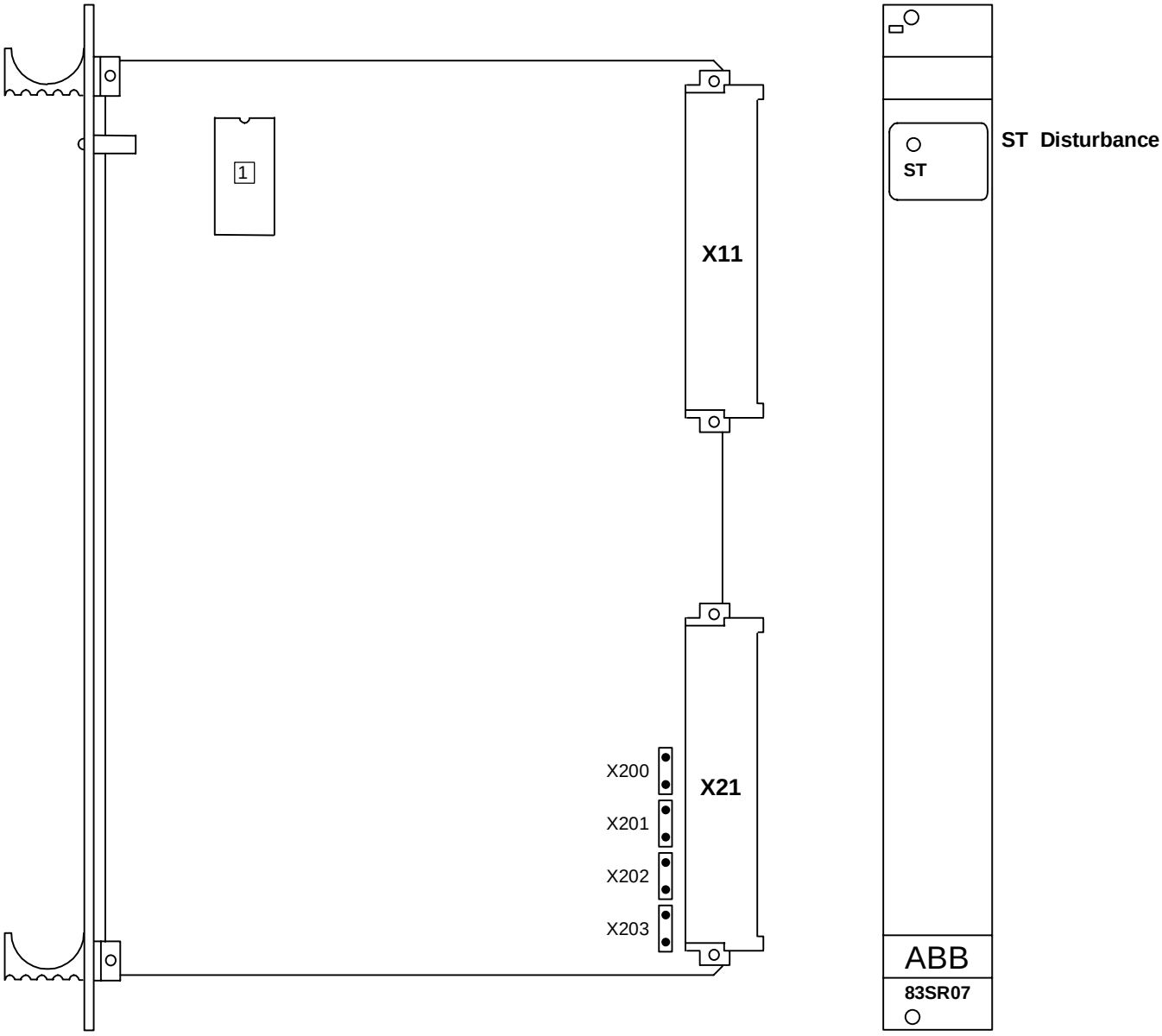

1 EPROM programmed, order number: GJR2392743Pxxxx
xxxx = Position number according to the applicable program version.

Technical data

In addition to the system data, the following values apply:

Power supply

Operating voltage UD	4.9 ... 5.1 V, typ. 5.0 V
Power consumption with UD = 5.0 V	220 mA
Operating voltage US	19.5 ... 30 V, typ. 24 V
Power consumption with US = 24 V	100 mA + output values
Power dissipation	5 ... 8 W depending on operating voltage and configuration
Reference potential, process side	Z = 0 V
Reference potential, bus side	ZD = 0 V

BINARY SIGNALS

Input values

Direct connections for 2 process interfaces

EZx	Process checkback signal CLOSED	5 mA at 48 V
EOx	Process checkback signal OPEN	5 mA at 48 V
TSx	Local intervention	5 mA at 48 V
STAx	Disturbance in substation	5 mA at 48 V

x = 1, 2

Output values

Contact voltages, process side

for inputs EZx, EOx, TSx and STAx	UK1 = 48 V / ≤ 30 mA UK2 = 48 V / ≤ 30 mA

x = 1, 2

The outputs are short-circuit-proof, non-interfering and open-circuit-proof

Output values AFx

Drive release for power controller	US - max. 4 V
Output current	≤ 100 mA

x = 1, 2

The outputs are short-circuit-proof, non-interfering and open-circuit-proof

ANALOG SIGNALS

Input values Ex1 and Ex3

2-wire transducer

Jumpers X200, X201, X202 and X203 are plugged in.

Current ranges (corresponding to 0 ... 100 %)	0 ... 20 mA or 4 ... 20 mA
Maximum value	-1 ... 50 mA
Input resistance Ri towards Z	50 ohms

x = 1, 2

Input values Ex1/Ex2 and Ex3/Ex4

4-wire transducers

Jumpers X200, X201, X202 and X203 are not plugged in.

Current ranges (corresponding to 0 ... 100 %)		0 ... 20 mA or 4 ... 20 mA
Maximum value		-1 ... 50 mA
Input resistance Ri towards Ex2 and Ex4		50 ohms

x = 1, 2

Accuracy of the input values

All data are based on 100 % of input value 20 mA

Accuracy:	in as-delivered condition (23°C)	≤ 0.1 %
	over a temperature range of 0 to 70 °C, aging, voltage range	≤ 0.3 %
Quantization error		≤ 0.02 %
Linearity error		≤ 0.1 %
Temperature sensitivity		≤ 50 ppm/K (typ. 30 ppm/K)
Errors due to digital linearization		1 LSB
Resolution:	at 0 ... 20 mA	12 bits
	at 4 ... 20 mA	12 bits
Common-mode rejection		120 dB
Normal-mode rejection at 16 2/3, 50 and 60 Hz		50 dB

Transducer power supply Sx1/Sx3

Output voltage	US - max. 4 V
Output current	≤ 50 mA

Outputs Sx1 are short-circuit-proof, non-interfering and open-circuit-proof.
Outputs Sx1 and Sx3 are interconnected internally.

x = 1, 2

Output values AYx/Zx1

Current ranges (corresponding to 0 ... 100 %)	0 ... 20 mA or 4 ... 20 mA
Burden	≤ 500 ohms

x = 1, 2

The outputs are short-circuit-proof, non-interfering and open-circuit-proof

Accuracy of the output values

All data are based on 100 % of the output value 20 mA

Accuracy:	in as-delivered condition (23°C)	≤ 0.1 %
	over temperature, aging, voltage range	≤ 0.4 %
Quantization error		≤ 0.02 %
Linearity error		≤ 0.1 %
Temperature sensitivity		≤ 50 ppm/K (typ. 30 ppm/K)
Resolution,	at 0 ... 20 mA	12 bits
	at 4 ... 20 mA	12 bits

Initialization time

Upon power connection or when the module is plugged in	2 ... 22 sec

Interference immunity (of the process inputs and outputs)

Electrostatic discharge immunity	DIN EN 61000-4-2	8 kV / 4 kV
Radiated, radio-frequency, electromagnetic field, immunity	DIN EN 61000-4-3	10V/m
Electrical fast transient/burst immunity	DIN EN 61000-4-4	2 kV
Surge Immunity	DIN EN 61000-4-5	2 kV / 1 kV
Conducted disturbances immunity	DIN EN 61000-4-6	10 V

ORDERING DATA

Order no. for complete module:

Type designation: 83SR07-E/R1010 Order number: GJR2392700R1010

Technical data are subject to change without notice!

ABB AG
Power Technology Systems
P.O. Box 10 03 51
68128 Mannheim
GERMANY
Phone: +49 (0) 621 381-3000
Fax: +49 (0) 621 381-2645
E-Mail: powertech@de.abb.com
Internet: http://www.abb.de/pt

NOTE:
We reserve the right to make technical changes or modify the contents of this manual without prior notice. With regard to purchase orders, the agreed particulars shall prevail.
ABB does not accept any responsibility whatsoever for potential errors or possible lack of information in this document.

We reserve all rights in this document and in the subject matter and illustrations contained therein. Any reproduction – in whole or in parts – is forbidden without ABB's prior written consent.

Copyright© 2004 ABB
All rights reserved.