ABB Drives

User's Manual
DeviceNet Adapter Module
RDNA-01

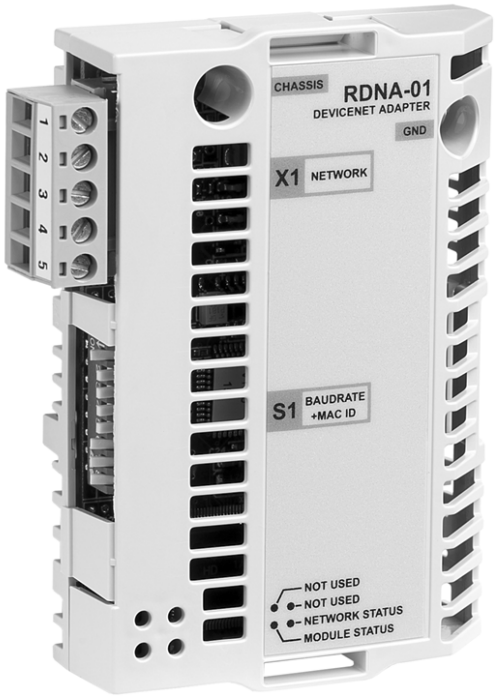

Attn：Smiling
Mobile/WhatsApp/Wechat:+86 18050035902
Email: info@htechplc.com

DeviceNet Adapter Module
RDNA-01

User's Manual

3AFE64504223 Rev D
EN
EFFECTIVE: 16.07.2007

© 2007 ABB Oy. All Rights Reserved.

Safety instructions

Overview

This chapter states the general safety instructions that must be followed when installing and operating the RDNA-01 DeviceNet Adapter module.

The material in this chapter must be studied before attempting any work on the unit.

In addition to the safety instructions given below, read the complete safety instructions of the specific drive you are working on.

General safety instructions



WARNING! All electrical installation and maintenance work on the drive should be carried out by qualified electricians. The drive and adjoining equipment must be properly earthed.

Do not attempt any work on a powered drive. After switching off the mains, always allow the intermediate circuit capacitors to discharge for 5 minutes before working on the frequency converter, the motor or the motor cable. It is good practice to check (with a voltage indicating instrument) that the drive is in fact discharged before beginning work.

The motor cable terminals of the drive are at a dangerously high voltage when mains power is applied, regardless of motor operation.

There can be dangerous voltages inside the drive from external control circuits even when the drive mains power is shut off. Exercise appropriate care when working on the unit. Neglecting these instructions can cause physical injury or death.

Table of contents

Safety instructions 5

Overview 5
General safety instructions 5

Table of contents 7

Introduction 11

Intended audience 11
Before you start 11
What this manual contains 11
Further Information 12
Product and service inquiries 12
Product training 12
Providing feedback on ABB Drives manuals 13

Overview 15

Overview 15
DeviceNet Bus topology 15
The RDNA-01 DeviceNet Adapter module 16
  Compatibility 17
  Delivery check 17
  Warranty and liability information 18

Quick start-up guide 19

Overview 19
PLC Configuration 19
Mechanical and electrical installation 23
Drive configuration 23
  Example Configurations 24

Mechanical installation 29

Mounting 29

Electrical installation 31

Overview 31
General cabling instructions 31
DIP switch settings 31
DeviceNet connection 33

Drive configuration 35

Overview 35
DeviceNet connection configuration 35
Control locations 35

Master configuration 45

Overview 45
Configuring the system 45
EDS files 45

Communication profiles 47

The ODVA AC/DC drive profile 47
ODVA output attributes 48
ODVA input attributes 49
ABB Drives communication profile 51
The control word and the status word 51

Communication 53

Overview 53
Introduction to DeviceNet 53
Object modelling and functional profiles 53
Assembly object 53
Drive parameter handling 61
Class objects 61

Identity Object, Class 0x01 61
DeviceNet Object, Class 0x03 64
Configuration Object, Class 0x91 66
DeviceNet Connection Object, Class 0x05 67
Acknowledge Handler Object, Class 0x2B 71
Motor Data Object, Class 0x28 72
Control Supervisor Object, Class 0x29 74
AC/DC-Drive Object, Class 0x2A 76

Diagnostics 77

RDNA-01 status codes 77
LED indications 78
Installation problems 79
Drive setup 79
PLC programming 79
Scanner fault indications 79

Definitions and abbreviations 81

Technical data 85

RDNA-01 85
Fieldbus link 86

Introduction

Intended audience

The manual is intended for people responsible for installing, commissioning and using an RDNA-01 DeviceNet Adapter module. The reader is expected to have a basic knowledge of electrical fundamentals, electrical wiring practices and how to operate the drive and the DeviceNet protocol.

Before you start

It is assumed that the drive is installed and ready to operate before starting the installation of the extension module.

In addition to conventional installation tools, have the drive manuals available during the installation as they contain important information not included in this manual. The drive manuals are referred to at various points of this document.

What this manual contains

This manual contains information on the wiring, configuration and use of the RDNA-01 DeviceNet Adapter module.

Safety instructions are featured in the first few pages of this manual.

Overview contains short descriptions of the DeviceNet protocol and the RDNA-01 DeviceNet Adapter module, a delivery checklist and information on the manufacturer's warranty.

Quick start-up guide contains a short description of how to set up the RDNA-01 DeviceNet Adapter module using the ACS800 drive as an example.

Mechanical installation contains placing and mounting instructions for the module.

Electrical installation contains wiring, bus termination and earthing instructions.

Drive configuration explains how to program the drive before the communication through the adapter module can be started.

Master configuration explains how to program the DeviceNet master before communication through the adapter module can be started.

Communication profiles describes the communication profiles used in the communication between the DeviceNet network, the RDNA-01 module and the drive.

Communication contains a description of the DeviceNet functionality supported by the RDNA-01.

Diagnostics explains how to trace faults with the status LEDs on the RDNA-01 module.

Definitions and abbreviations explains definitions and abbreviations concerning the DeviceNet protocol family.

Technical data contains information on physical dimensions, configurable settings and connectors of the module and a specification of the DeviceNet link.

Further Information

Further information on the DeviceNet protocol is available on the world wide web from www.odva.org.

Product and service inquiries

Address any inquiries about the product to your local ABB representative, quoting the type code and serial number of the unit in question. A listing of ABB sales, support and service contacts can be found by navigating to www.abb.com/drives and selecting *Drives – Sales, Support and Service network*.

Product training

For information on ABB product training, navigate to www.abb.com/drives and select *Drives – Training courses*.

Providing feedback on ABB Drives manuals

Your comments on our manuals are welcome. Go to www.abb.com/drives, then select successively *Drives – Document Library – Manuals feedback form*.

Overview

Overview

This chapter contains a short description of DeviceNet bus topology, the RDNA-01 Adapter module, a delivery checklist, and warranty information.

Further information can be obtained from www.odva.org.

DeviceNet Bus topology

The DeviceNet network has a linear bus topology. Terminating resistors are required on each end of the trunk line. Drop lines as long as 6 metres (20 feet) each are permitted, allowing one or more nodes to be attached. DeviceNet allows branching structures only on drop lines. An example of an allowable topology is shown in *Figure 1.*

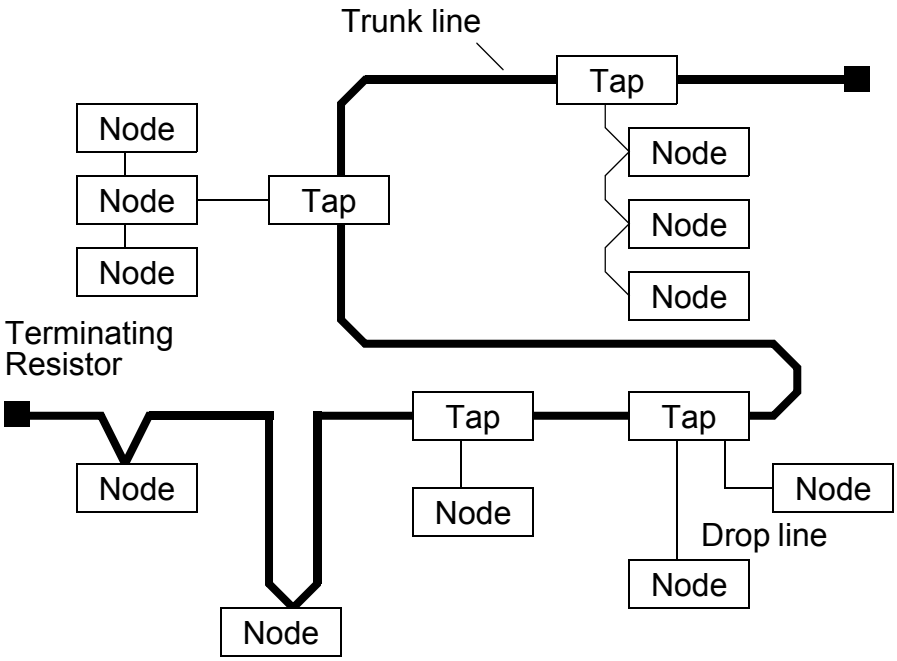

Figure 1. DeviceNet bus topology

The maximum length of trunk cable depends on the data rate and on the type of the cable used (see chapter *Technical data*).

Terminating resistor

The DeviceNet network should be terminated at both ends of the trunk cable with a 121 ohm, ¼ W, 1% Metal Film resistor. Connect this resistor between the two signal wires (CAN_H, CAN_L) on the DeviceNet cable.

The RDNA-01 DeviceNet Adapter module

The RDNA-01 DeviceNet Adapter module is an optional device for ABB drives which enables the connection of the drive to a DeviceNet system. The drive is considered as a slave in the DeviceNet network. Through the RDNA-01 DeviceNet Adapter module it is possible to:

- give control commands to the drive (Start, Stop, Run enable, etc.)
- feed a motor speed or torque reference to the drive
- give a process actual value or a process reference to the PID controller of the drive
- read status information and actual values from the drive
- read and write drive parameter values
- reset a drive fault.

The RDNA-01 acts as a Class 2 slave only with predefined master-slave connection set services. These include the Explicit Messaging, the Poll-Response service and the Change of State/ Cyclic service. The DeviceNet commands and services supported by the RDNA-01 DeviceNet Adapter module are discussed in chapter *Communication*. Please refer to the user documentation of the drive as to which commands are supported by the drive.

The adapter module is mounted into its option slot inside the drive. See the *Hardware Manual* of the drive.

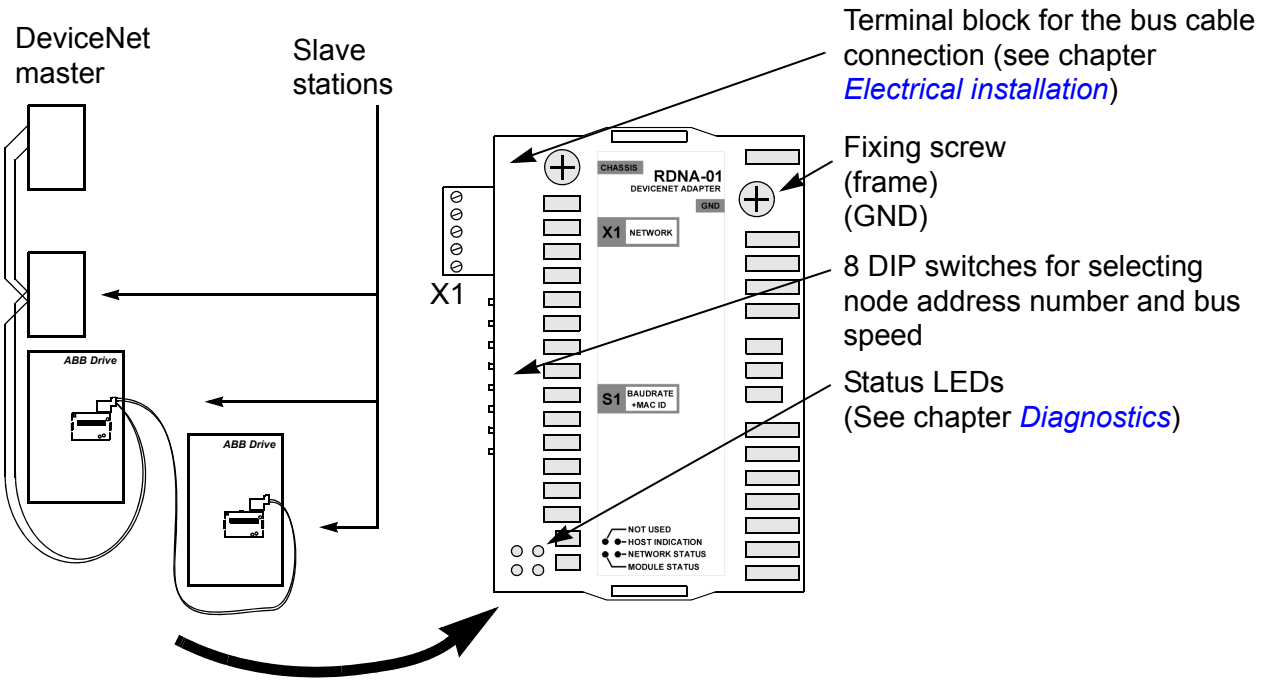

Figure 2. The construction of the DeviceNet link and the module layout of the RDNA-01

Compatibility

The RDNA-01 is compatible with all scanners working according to ODVA DeviceNet specifications.

Delivery check

The option package for the RDNA-01 DeviceNet Adapter module contains:

- RDNA-01 module
- two screws (M3×10)
- this manual.

Warranty and liability information

The manufacturer warrants the equipment supplied against defects in design, materials and workmanship for a period of twelve (12) months after installation or twenty-four (24) months from date of manufacturing, whichever first occurs. The local ABB office or distributor may grant a warranty period different to the above and refer to local terms of liability as defined in the supply contract.

The manufacturer is not responsible for

- any costs resulting from a failure if the installation, commissioning, repair, alternation, or ambient conditions of the drive do not fulfil the requirements specified in the documentation delivered with the unit and other relevant documentation
- units subjected to misuse, negligence or accident
- units comprised of materials provided or designs stipulated by the purchaser.

In no event shall the manufacturer, its suppliers or subcontractors be liable for special, indirect, incidental or consequential damages, losses or penalties.

If you have any questions concerning your ABB drive, please contact the local distributor or ABB office. The technical data, information and specifications are valid at the time of printing. The manufacturer reserves the right to modifications without prior notice.

Quick start-up guide

Overview

This chapter presents the steps to take during the start-up of the RDNA-01 DeviceNet Adapter Module. For more detailed information, see the chapters *Mechanical installation*, *Electrical installation*, and *Drive configuration* elsewhere in this manual.



WARNING! Follow the safety instructions given in this manual and the *Hardware Manual* of the drive.

PLC Configuration

This is an example on how to configure an Allen-Bradley ControlLogix 5555 PLC with a 1756-DNB 1756 DeviceNet Scanner to use an ACS800 equipped with an RDNA-01 fieldbus adapter.

- Select and import the EDS file for drive, for example ACS800_Standard_RDNA01_appl1.36_Typical_filerev3.2.EDS. For more help on choosing the correct file, refer to ABB EDS Selection Guide document delivered with the EDS files.

Note: Only one EDS file with the same Product ID and Vendor code can be installed in the PLC at a time.

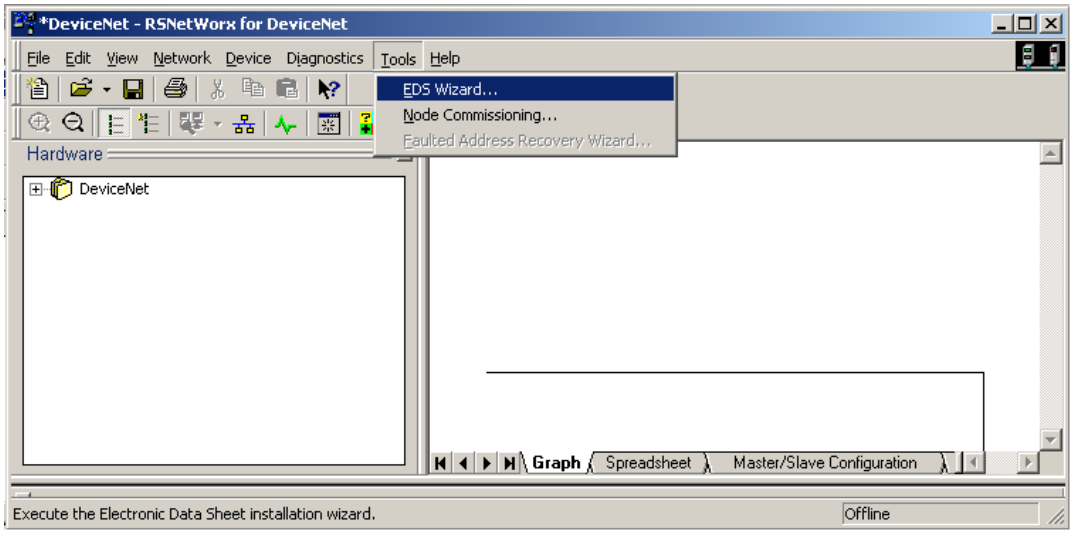

- Add drive to network in RSNetWorx for DeviceNet.
- Configure device MAC address.

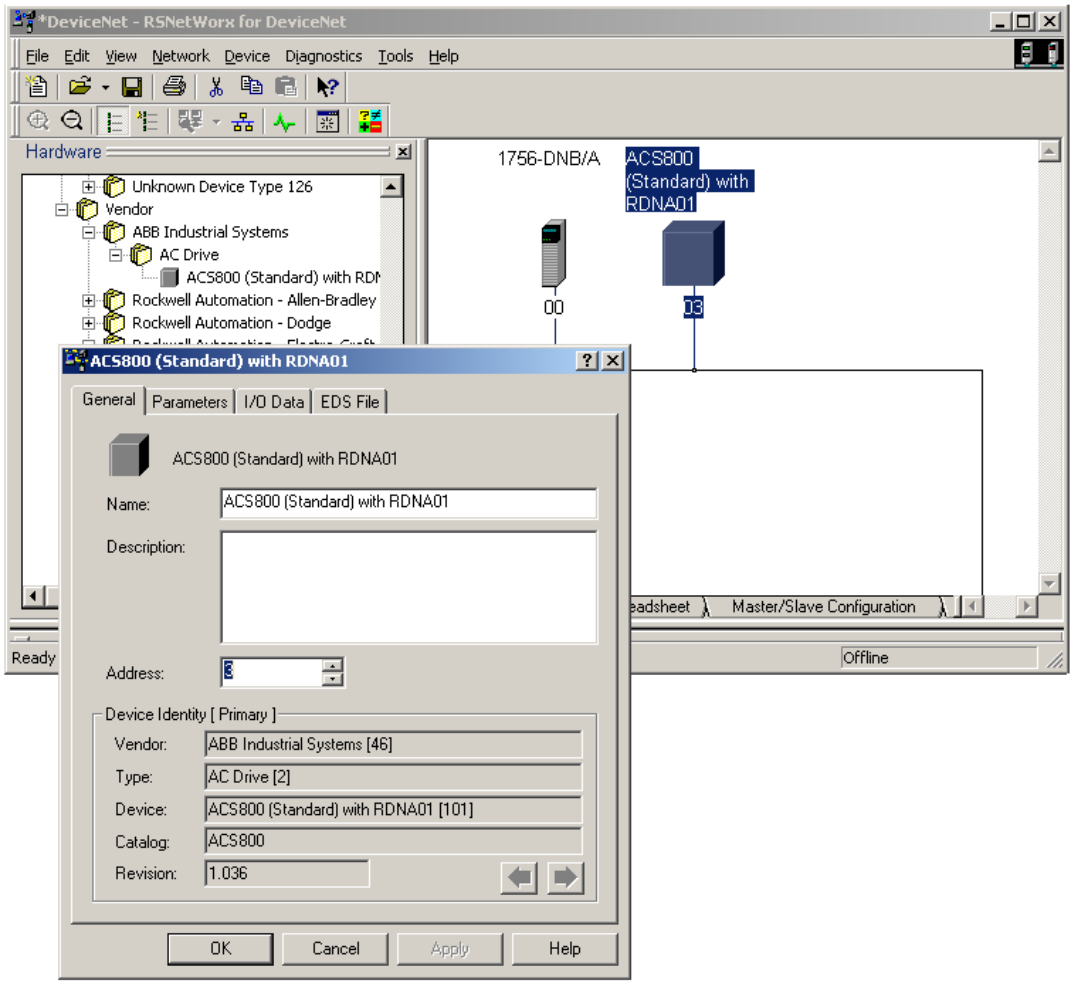

- Configure the DeviceNet Scanner. Add the drive to Scanlist and edit I/O parameters. Select Polled or Change of State/Cyclic. Then enter the input and output sizes of the I/O assemblies that will be used (e.g. for Basic Speed Control Assemblies 20 and 70, each size is set to 4 bytes).

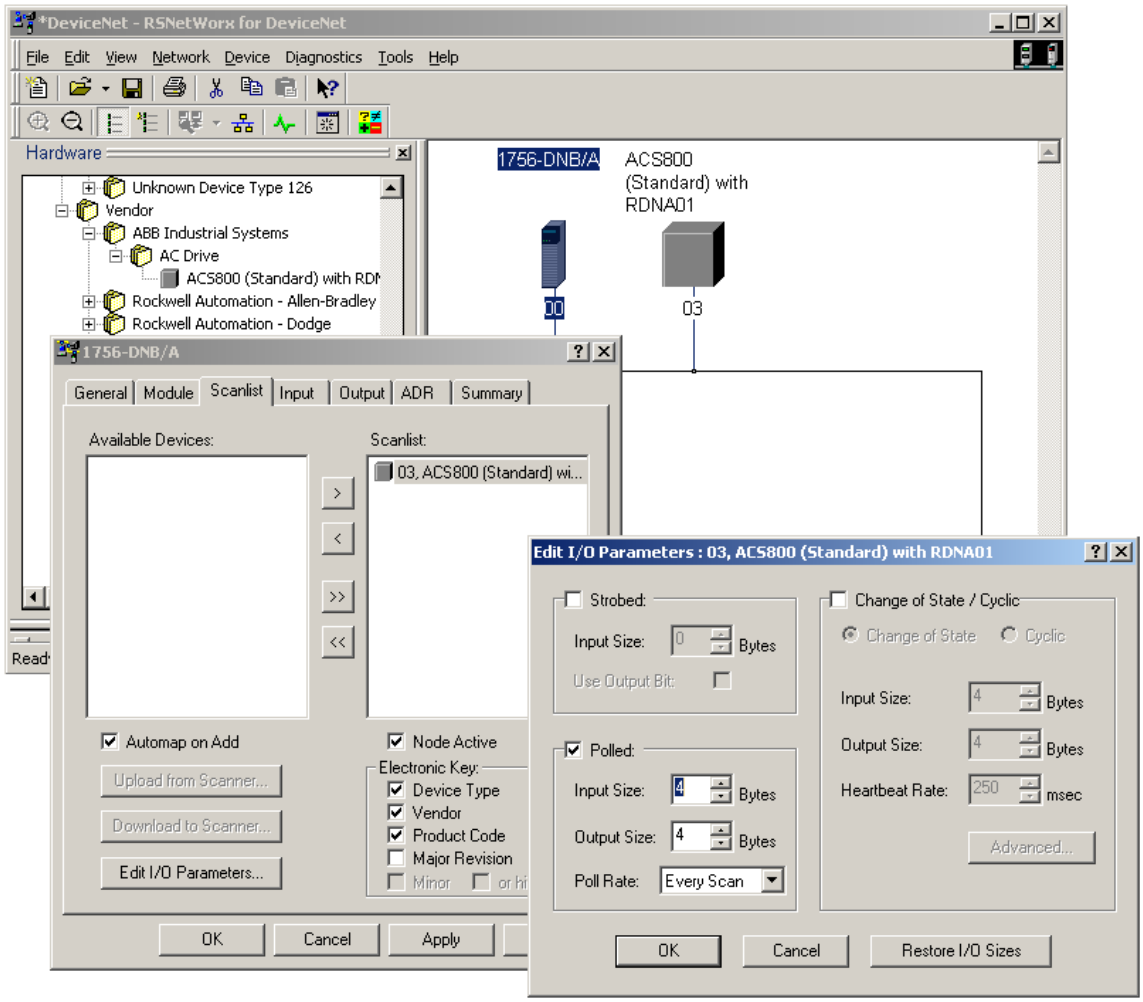

- For convenience, you can also edit the Input and Output memory mappings. By default the two 16-bit input words are mapped into a single 32-bit double word. It is more convenient, however, to map them into separate double words. Output words can be mapped similarly.

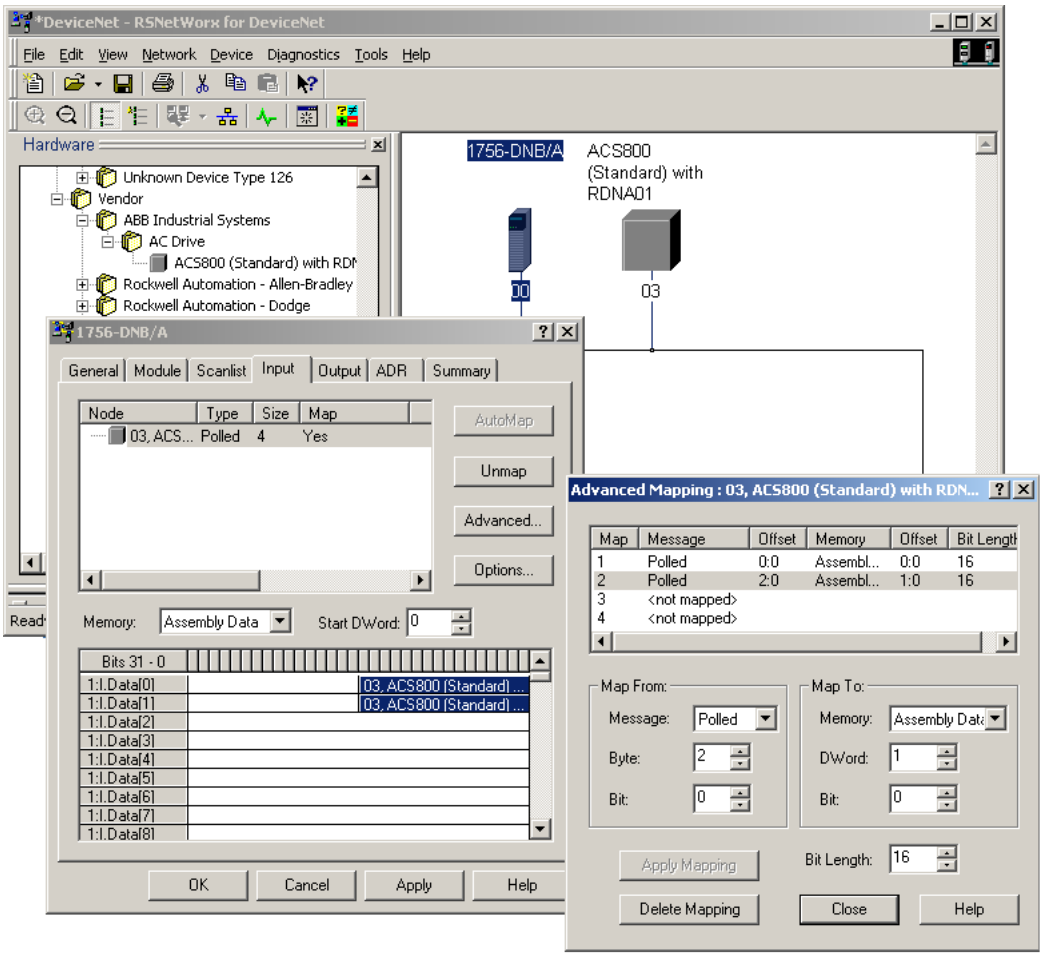

- Download the scanner settings to the device in online mode.
- Add your DeviceNet scanner to an RSLogix 5000 project. You should get new Controller Tags Local:<slot>:I and Local:<slot>:O. You can use them to access the data as mapped above:

  Local:<slot>:O.Data[0] is the Control Word
  Local:<slot>:O.Data[1] is the Reference
  Local:<slot>:I.Data[0] is the Status Word
  Local:<slot>:I.Data[1] is the Actual Value

Note: You may need to change the value of Local:<slot>:O.CommandRegister.Run or Local:<slot>:I.CommandRegister.Run to 1.

Mechanical and electrical installation

- Insert the RDNA-01 into its specified slot in the drive.
- Fasten the screws.
- Plug the fieldbus connector into the module.

Drive configuration

Note: Configuring the drive for communication with the module is dependent on the drive type. Refer to the *Firmware Manual* of the drive for detailed information on configuring the drive to use the communication module.

- Power up the drive.
- Configure drive to enable module. With an ACS550 drive, set parameter 98.02 COMM PROT SEL to EXT FBA. With an ACS800 drive, set parameter 98.02 COMM. MODULE LINK to FIELDBUS.
- Verify that FBA TYPE is DEVICENET. On the ACS800 drive, this is parameter 51.01.
- With ACS800, set parameter 98.07 COMM PROFILE according to your assembly instance selection. See the table in section communication profiles for more information. This is not needed with ACS550.
- Configure drive to accept Start/Stop, Direction, Reference, Run Enable and Fault Reset from module. Examples of appropriate values on the ACS800 are shown in the following tables.
- Configure module via fieldbus configuration groups for desired network characteristics. Examples of appropriate values on the ACS800 are shown in the following tables.
- Initiate a “Fieldbus adapter parameter refresh” by setting parameter 51.27 FBA PAR REFRESH.

Note: The new settings take effect only when the module is powered up the next time or when a ‘Fieldbus Adapter parameter refresh’ is given (see the drive documentation).

Example Configurations

ODVA Basic Speed Control on ACS800

Drive Parameter	Example setting for ACS800
10.01 EXT1 STRT/STP/DIR	COMM.CW
10.03 REF DIRECTION	REQUEST
11.03 EXT REF1 SELECT	COMM. REF
16.01 RUN ENABLE	YES
16.04 FAULT RESET SEL	COMM.CW
51.01 MODULE TYPE	DEVICENET (Verify only)
51.02 Module MacID	2
51.03 Module baud rate	2 (500 kbit/s)
51.04 HW/SW option	1 (use software settings)
51.05 Stop function	0 (ramp stop)
51.06 Output instance	20 (ODVA Basic Speed Control)
51.07 Input instance	70 (ODVA Basic Speed Control)
98.02 COMM MODULE LINK	FIELDBUS
98.07 COMM PROFILE	GENERIC

ABB Drives profile on ACS800

Drive Parameter	**Example setting for ACS800**
10.01 EXT1 STRT/STP/DIR	COMM.CW
10.03 REF DIRECTION	REQUEST
11.03 EXT REF1 SELECT	COMM. REF
16.01 RUN ENABLE	YES
16.04 FAULT RESET SEL	COMM.CW
51.01 MODULE TYPE	DEVICENET
51.02 Module MacID	2
51.03 Module baud rate	2 (500 kbit/s)
51.04 HW/SW option	1 (use software settings)
51.05 Stop function	0 (ramp stop)
51.06 Output instance	100 (ABB Drives Control Assembly)
51.07 Input instance	101 (ABB Drives Input Assembly)
98.02 COMM MODULE LINK	FIELDBUS
98.07 COMM PROFILE	ABB DRIVES

ABB Drives profile with user specific assemblies on ACS800

Drive Parameter	**Example setting for ACS800**
10.01 EXT1 STRT/STP/DIR	COMM.CW
10.03 REF DIRECTION	REQUEST
11.03 EXT REF1 SELECT	COMM. REF
16.01 RUN ENABLE	YES
16.04 FAULT RESET SEL	COMM.CW
51.01 MODULE TYPE	DEVICENET
51.02 Module MacID	2
51.03 Module baud rate	2 (500 kbit/s)
51.04 HW/SW option	1 (use software settings)
51.05 Stop function	0 (ramp stop)
51.06 Output instance	102 (User Specific Assembly)
51.07 Input instance	103 (User Specific Assembly)
51.08 Output I/O par 1	1 (data set 1, 1st word = Control Word)
51.09 Output I/O par 2	2 (data set 1, 2nd word = Reference 1)
51.10 Output I/O par 3	1202 (12.02 CONST SPEED 1)
51.11 Output I/O par 4	1203 (12.03 CONST SPEED 2)
51.12 Input I/O par 1	4 (data set 2, 1st word = Status Word)
51.13 Input I/O par 2	5 (data set 2, 2nd word = Actual 1)
51.14 Input I/O par 3	104 (01.04 CURRENT)
51.15 Input I/O par 4	106 (01.06 POWER)
51.26 VSA I/O size	4 (use 4 words input and output)
98.02 COMM MODULE LINK	FIELDBUS
98.07 COMM PROFILE	ABB DRIVES

ODVA Extended Speed Control plus Drive Parameters assemblies on ACS800

Drive Parameter	**Example setting for ACS800**
10.01 EXT1 STRT/STP/DIR	COMM.CW
10.03 REF DIRECTION	REQUEST
11.03 EXT REF1 SELECT	COMM. REF
16.01 RUN ENABLE	YES
16.04 FAULT RESET SEL	COMM.CW
51.01 MODULE TYPE	DEVICENET
51.02 Module MacID	2
51.03 Module baud rate	2 (500 kbit/s)
51.04 HW/SW option	1 (use software settings)
51.05 Stop function	0 (ramp stop)
51.06 Output instance	121 (ODVA Extended Speed plus Drive Parameters Assembly) Command word and Reference 1 are according to ODVA.
51.07 Input instance	171 (ODVA Extended Speed plus Drive Parameters Assembly) Status word and Actual 1 are according to ODVA.
51.08 Output I/O par 1	2202 (22.02 ACCEL TIME 1)
51.09 Output I/O par 2	2202 (22.03 DECEL TIME 1
51.10 Output I/O par 3	1202 (12.02 CONST SPEED 1)
51.11 Output I/O par 4	1203 (12.03 CONST SPEED 2)
51.12 Input I/O par 1	104 (01.04 CURRENT)
51.13 Input I/O par 2	106 (01.06 POWER)
51.14 Input I/O par 3	117 (01.17 DI6-1 STATUS)
51.15 Input I/O par 4	118 (01.18 AI1)

51.26 VSA I/O size	4 (use 4 words additional input and output) Command word, Reference 1, Status word and Actual value 1 are fixed in instances 121 and 171 and not included to the VSA I/O size.
98.02 COMM MODULE LINK	FIELDBUS
98.07 COMM PROFILE	ABB DRIVES

Note: Remember to change the size of transferred data in the DeviceNet scanner settings.

Mechanical installation



WARNING! Follow the safety instructions given in this manual and in the *Hardware Manual.*

Mounting

The RDNA-01 is to be inserted into its option slot inside the drive. The module is held in place with plastic retaining clips and two screws. The screws also provide the earthing of the I/O cable shield connected to the module, and interconnect the GND signals of the module and the control board of the drive.

On installation of the module, the signal and power connection to the drive is automatically made through a 34-pin connector.

Mounting procedure:

- Insert the module carefully into its position inside the drive until the retaining clips lock the module into position.
- Fasten the two screws (included) to the stand-offs.

Note: Correct installation of the screws is essential for fulfilling the EMC requirements and for proper operation of the module.

Electrical installation

Overview

This chapter contains:

- general cabling instructions
- instructions for setting the module node address number and communication speed (bit rate)
- instructions for connecting the module to the DeviceNet bus.



WARNING! Before installation, switch off the drive power supply. Wait 5 minutes to ensure that the capacitor bank of the drive is discharged. Switch off all dangerous voltages connected from external control circuits to the inputs and outputs of the drive.

General cabling instructions

Arrange the bus cables as far away from the motor cables as possible. Avoid parallel runs. Use bushings at cable entries.

DIP switch settings

DIP switches on the printed circuit board of the RDNA-01 are used to select node address number and bus speed for the module.

Use the table below to set the values. Note that switch 3 is the most significant bit of the node address number.

Bit rate	Binary	DIP switch
125 kbit/s	00	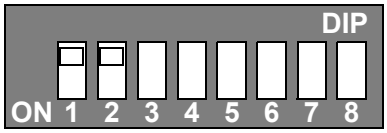
250 kbit/s	01	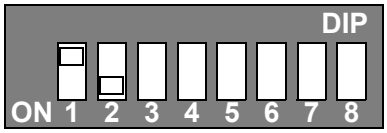
500 kbit/s	10	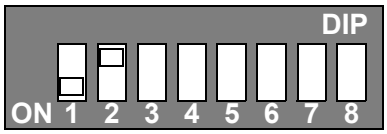
Node no.	**Binary**	
1	000001	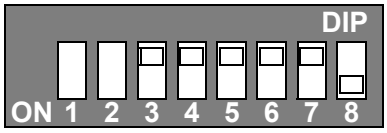
2	000010	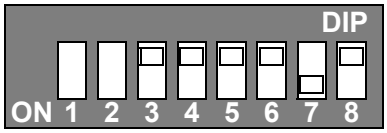
• • •	• • •	• • •
63	111111	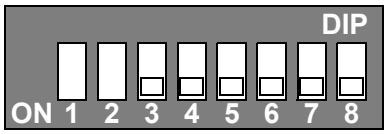

DeviceNet connection

The bus cable is connected to terminal block X1 on the RDNA-01.

The terminal block is described below.

X1		Description
1	V-	Isolated ground
2	CAN_L	CAN_L bus line
3	SHLD	Network cable shield
4	CAN_H	CAN_H bus line
5	V+	Isolated 24 V DC voltage supply

DeviceNet bus termination

The DeviceNet bus line must be terminated with 121 ohm resistors connected between the CAN_L and CAN_H wires at each end as shown below.

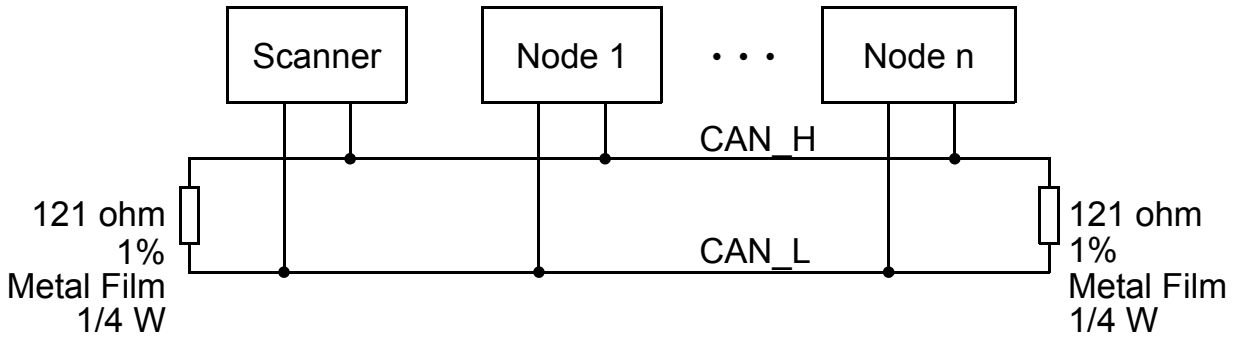

Connection examples

5-pin micro-style connector

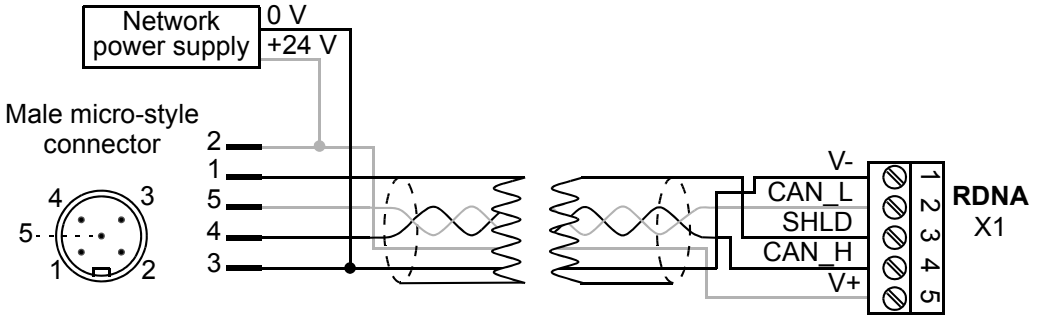

5-pin mini-style connector

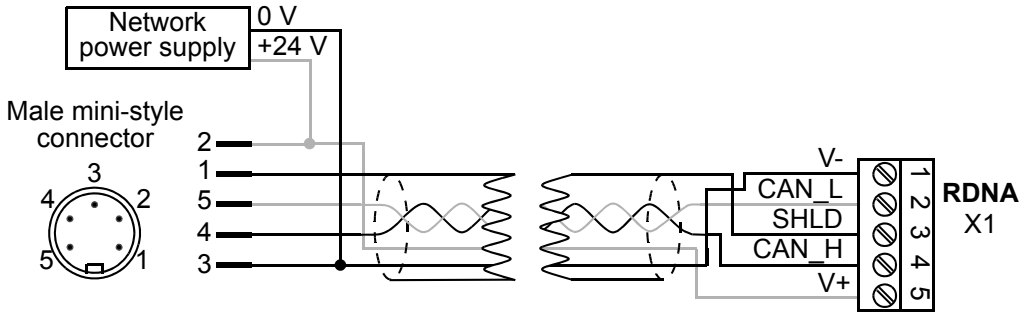

Standard open-style screw connector

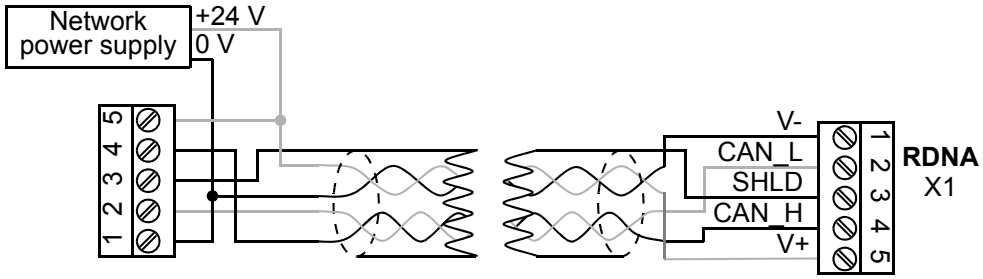

Drive configuration

Overview

This chapter gives information on configuring the RDNA-01 DeviceNet Adapter module.

DeviceNet connection configuration

The detailed procedure of activating the module for communication with the drive is dependent on the drive type. (Normally, a parameter must be adjusted to activate the communication. See the drive documentation.)

As communication between the drive and the RDNA-01 is established, several configuration parameters are copied to the drive. These parameters (shown in *Table 1.*) must be checked first and adjusted if necessary. The alternative selections for these parameters are discussed in more detail below the table.

Note: The new settings take effect only when the module is powered up the next time or when the module receives a ‘Fieldbus Adapter parameter refresh’ command from the drive.

Control locations

ABB drives can receive control information from multiple sources including digital inputs, analogue inputs, the drive control panel and a communication module (e.g. RDNA-01). ABB drives allow the user to separately determine the source for each type of control information (Start, Stop, Direction, Reference, Fault Reset, etc.). In order to give the fieldbus Scanner the most complete control over the drive, the communication module must be selected as source for this information. See the user documentation of the drive for information on the selection parameters.

Table 1. The RDNA-01 configuration parameters

Fieldbus par. no.	Parameter name	Alternative settings	Default setting
1	MODULE TYPE	DEVICENET	DEVICENET
2	Module MacID	0 … 63	63
3	Module Baud rate	0 = 125 kBit/s; 1 = 250 kBit/s; 2 = 500 kBit/s	0
4	HW/SW Option	0 = Hardware 1 = Software	0
5	Stop Function	0 = Ramp stop; 1 = Coast stop	0
6	Output Instance	20 … 121	20
7	Input Instance	70 … 171	70
8	Output I/O Par 1	0 … 32767	0
9	Output I/O Par 2	0 … 32767	0
10	Output I/O Par 3	0 … 32767	0
11	Output I/O Par 4	0 … 32767	0
12	Input I/O Par 1	0 … 32767	0
13	Input I/O Par 2	0 … 32767	0
14	Input I/O Par 3	0 … 32767	0
15	Input I/O Par 4	0 … 32767	0
16	Output I/O Par 5	0 … 32767	0
17	Output I/O Par 6	0 … 32767	0
18	Output I/O Par 7	0 … 32767	0
19	Output I/O Par 8	0 … 32767	0
20	Output I/O Par 9	0 … 32767	0
21	Input I/O Par 5	0 … 32767	0
22	Input I/O Par 6	0 … 32767	0
23	Input I/O Par 7	0 … 32767	0
24	Input I/O Par 8	0 … 32767	0

25	Input I/O Par 9	0 … 32767	0
26	VSA I/O Size	0 … 9	4

Note: The Default values are used when the module is connected to the drive for the first time. The parameters in the fieldbus group must be set up for the current application.

01 MODULE TYPE

Shows the connected communication option module type.

02 Module MacID

Selects the MAC ID for the node.

0 … **63**
On a DeviceNet network, each node is identified by a unique node number. This node number is between 0 and 63, and it is called MAC ID.

Note: When parameter 04 HW/SW Option is set to 0=HW, this parameter is read-only and its value is set by DIP switches. See chapter *Electrical installation*.

03 Module Baud rate

Sets the baud rate for the DeviceNet interface. This is user selectable, but must be the same on every node on the DeviceNet network.

0 = 125 kBit/s; **1** = 250 kBit/s; **2** = 500 kBit/s

Note: When parameter 04 HW/SW Option is set to 0=HW, this parameter is read-only and its value is set by DIP switches. See chapter *Electrical installation*.

04 HW/SW Option

Defines the selection source of module MacID and baud rate.

0 = selection of MAC ID and baud rate via the DIP switches enabled.
1 = selection of MAC ID and baud rate via parameters 02 and 03 and via the DeviceNet Object enabled (see *section DeviceNet Object, Class 0x03* on page *64)*.

05 Stop Function

Defines the method for stopping the motor with instances 20, 21 and 121.

0 = Ramp stop: the motor decelerates along the active deceleration ramp.
1 = Coast stop: the motor comes to a stop by coasting.

06 Output Instance
07 Input Instance

These parameters define the preferred output and input assemblies respectively.

The instances 20, 70, 21 and 70 are so-called static Drive Profile instances as defined in the ODVA DeviceNet specification (AC/DC Drive profile). Instances 121 and 171 are dynamic instances based on the ODVA where the Command word, Reference 1, Status word and Actual value 1 are fixed but it is possible to increase the number of inputs and outputs. The instances 100, 101, 102 and 103 are so-called ABB Drives instances as defined by ABB, i.e. the control word, status word, speed reference and speed actual value are defined by the ABB Drives communication profile.

The static/dynamic property indicates whether the data length of the instance is fixed or adjustable.

Output instances (from master to drive)		
Instance	**Assembly**	**Static/Dynamic**
20	Basic speed control output	Static
21	Extended speed control output	Static
100	ABB Drives assembly	Static
102	User specific assembly	Dynamic
121	Extended speed control plus drive parameters output	Dynamic

Input instances (from drive to master)		
Instance	**Assembly**	**Static/Dynamic**
70	Basic speed control input	Static
71	Extended speed control input	Static
101	ABB Drives assembly	Static
103	User specific assembly	Dynamic
171	Extended speed control plus drive parameters input	Dynamic

Note: The output instances carry data from the master to the drive and the input instances from the drive to the master.

The following table shows the possible combinations of output and input instances.

Possible instance combinations		
Output instance	**Input instance**	**Communication profile to be used**
20	70	Generic Drive profile
	71	Generic Drive profile
	171	Generic Drive profile
21	70	Generic Drive profile
	71	Generic Drive profile
	171	Generic Drive profile
121	70	Generic Drive profile
	71	Generic Drive profile
	171	Generic Drive profile
100	101	ABB Drives profile
	103	ABB Drives profile
102	101	ABB Drives profile
	103	ABB Drives profile

Note: Using instance 103 in Generic drive profile with ODVA output instances (20, 21, 121) is allowed but not recommended.

Selecting an invalid combination will reset the module and automatically configure the instances as follows:

1) If the output instance is invalid, instance **20** will be selected.

2) If the output instance is valid, but the input instance is invalid, the default input instance will be selected as follows:

Output instance	Default input instance
20	70
21	71
100	101
102	103
121	171

08 Output I/O Par 1

Defines the data word or drive parameter that can be **written** with Assembly object instances 102 and 121 (see sections *User Specific assembly* and *EXTENDED SPEED CONTROL PLUS DRIVE PARAMETERS assembly* in chapter *Communication*).

The content is defined by a decimal number in the range of 0 to 32767 as follows:

0	not used
1 - 99	data set area of the drive
101 - 9999	parameter area of the drive
10000 - 32767	not supported by the drive

The data set area is allocated as follows:	
1	data set 1 word 1
2	data set 1 word 2
3	data set 1 word 3
4	data set 2 word 1
5	data set 2 word 2
6	data set 2 word 3
7	data set 3 word 1
...	
99	data set 33 word 3

The parameter area is allocated as follows:

Parameter number with format xxyy, where xx is the parameter group number (0 to 99) and yy is the parameter number index inside the group (01 to 99).

Note: Group 0 is a virtual group for the data sets.

---

09 to 11 Output I/O Par 2 to Output I/O Par 4

See parameter *08 Output I/O Par 1*.

12 Input I/O Par 1

Defines a data word or drive parameter that can be **read** with Assembly object instances 103 and 171 (see sections *User Specific assembly* and *EXTENDED SPEED CONTROL PLUS DRIVE PARAMETERS assembly* in chapter *Communication*).

The content is defined by a decimal number in the range of 0 to 32767 as follows:

0	not used
1 - 99	data set area of the drive
101 - 9999	parameter area of the drive
10000 - 32767	not supported by the drive

The data set area is allocated as follows:	
1	data set 1 word 1
2	data set 1 word 2
3	data set 1 word 3
4	data set 2 word 1
5	data set 2 word 2
6	data set 2 word 3
7	data set 3 word 1
...	
99	data set 33 word 3

The parameter area is allocated as follows:

Parameter number with format xxyy, where xx is the parameter group number (1 to 99) and yy is the parameter number index inside the group (01 to 99).

13 to 15 Input I/O Par 2 to Input I/O Par 4

See parameter *12 Input I/O Par 1*.

16 to 20 Output I/O Par 5 to Output I/O Par 9

See parameter *08 Output I/O Par 1*.

21 to 25 Input I/O Par 5 to Input I/O Par 9

See parameter *12 Input I/O Par 1*.

26 VSA I/O Size

Defines the number of additional inputs and outputs used with the User Specific assembly and the Extended Speed Control plus Drive Parameters assembly. For example, if four inputs and outputs are configured with the above parameters, this parameter should have value 4 as well.

0 … 9

Master configuration

Overview

This chapter gives information on configuring the DeviceNet master station for communication through the RDNA-01 DeviceNet Adapter module.

Configuring the system

After the RDNA-01 DeviceNet Adapter module has been mechanically and electrically installed according to the instructions in previous chapters, and has been initialized by the drive, the master station must be prepared for communication with the module.

Please refer to the Scanner documentation for information on configuring the system for communication with the RDNA-01.

EDS files

Electronic Data Sheet (EDS) files specify the properties of the device for the DeviceNet scanner. The device is identified by the DeviceNet scanner by means of the Vendor Code, Product Code, Device Type, and Major Revision of the module software (See Identity Object 01h).

Note: Only one EDS file with the same DeviceNet Product Code can be installed in the PLC at a time.

To enable the use of different ABB drive types on the same DeviceNet network, a unique Product Code has been given to each drive type and application combination.

The EDS files are available in typical and extended formats. The typical EDS files include the I/O Assembly configuration properties and the definition of the parameters in the fieldbus parameter group (see chapter *Drive configuration*) only. The typical EDS files

can be used with the corresponding drive and/or application program independent of the application program revision.

The extended EDS files are intended for applications where access to the drive parameters via the DeviceNet network is required. The extended EDS files for ABB drives are specific to each drive type and application program revision. In addition, most extended EDS files need to be modified by hand to suit the application.

Communication profiles

Overview

This chapter describes the communication profiles used in the communication between the DeviceNet network, the RDNA-01 module and the drive.

Communication profiles

Communication profiles are ways of conveying control commands (Control word, Status word, references and actual values) between the master station and the drive.

With the RDNA-01 module, the DeviceNet network may employ either the ODVA AC/DC drive profile or the ABB Drives profile.

The ODVA AC/DC drive profile

This section briefly describes the ODVA AC/DC Drive profiles. Additional information can be obtained from www.odva.org.

An DeviceNet node is modelled as a collection of abstract objects. Each object represents the interface to and behaviour of a component within the product. The ODVA AC/DC Drive Profiles define a collection of objects suitable for the control of AC and DC drives. Objects supported by the RDNA-01 DeviceNet Adapter are listed in section *Class objects* on page *61*. Objects are defined by:

- Service
- Class
- Instance
- Attribute
- Behaviour

For example, to set the drive speed reference, the Set_Attribute_Single service can be requested for Attribute SpeedRef of the Class AC/DC Drive Object. The resulting

behaviour is that the reference speed of the drive is set to the requested value.

This is an example of *Explicit Messaging* where each attribute of a class is set individually. While this is allowed, it is inefficient. Instead *Implicit Messaging* using Input and Output Assembly Instances is recommended. *Implicit Messaging* allows the DeviceNet Master to set or get predefined groups of attributes in a single message exchange. Assembly Instances supported by the RDNA-01 are listed and defined in chapter *Communication*, page *53*.

ODVA output attributes

This section briefly describes the instances found in the ODVA AC/DC Drive Profiles output assemblies. Not all attributes listed here will be supported by all output assembly instances.

Run Forward & Run Reverse (Control Supervisor Object)

These attributes are used to assert run and stop commands to Control Supervisor Object state machine according to the following table.

Table 2.Run/Stop event matrix

RunFwd	RunRev	Trigger event	Run type
0	0	Stop	N/A
0 → 1	0	Run	RunFwd
0	0 → 1	Run	RunRev
0 → 1	0 → 1	No action	N/A
1	1	No action	N/A
0 → 1	1	Run	RunRev
1	0 → 1	Run	RunFwd

Fault Reset (Control Supervisor Object)

This attribute resets a drive fault on a transition from zero to one if the condition that caused the fault has been cleared.

Net Ctrl (Control Supervisor Object)

This attribute requests that the drive Run/Stop command be supplied locally (Net Ctrl = 0) or by the network (Net Ctrl = 1).

Net Ref (AC/DC Drive Object)

This attribute requests that the drive speed and torque references be supplied locally (Net Ref = 0) or by the network (Net Ref = 1).

Speed Reference (AC/DC Drive Object)

This attribute is the speed reference for the drive. The units are scaled by the Speed Scale attribute of the AC/DC Drive Object.

Torque Reference (AC/DC Drive Object)

This attribute is the torque reference for the drive. The units are scaled by the Torque Scale attribute of the AC/DC Drive Object.

ODVA input attributes

This section briefly describes the instances found in the ODVA AC/DC Drive Profiles input assemblies. Not all attributes listed here will be supported by all input assembly instances.

Faulted (Control Supervisor Object)

This attribute indicates that the drive has experienced a fault. The fault code may be read from the FaultCode attribute of the Control Supervisor Object.

Warning (Control Supervisor Object)

This attribute indicates that the drive is experiencing a warning condition. The warning code may be read from the WarnCode attribute of the Control Supervisor Object.

Running Forward (Control Supervisor Object)

This attribute indicates that the drive is running in the forward direction.

Running Reverse (Control Supervisor Object)

This attribute indicates that the drive is running in the reverse direction.

Ready (Control Supervisor Object)

This attribute indicates that the Control Supervisor Object state machine (see *State (Control Supervisor Object)* below) is in the Ready, Running or Stopping state.

Ctrl From Net (Control Supervisor Object)

This attribute indicates if the Run/Stop command is being supplied locally (Ctrl From Net = 0) or by the network (Ctrl From Net = 1).

Ref From Net (AC/DC Drive Object)

This attribute indicates if the Speed and Torque references are being supplied locally (Ref From Net = 0) or by the network (Ref From Net = 1).

At Reference (AC/DC Drive Object)

This attribute indicates the drive is operating at the specified speed or torque reference.

State (Control Supervisor Object)

This attribute indicates the current state of the Control Supervisor Object.

Table 3.Control supervisor states

State	Description	State	Description
0	Vendor Specific	4	Enabled
1	Startup	5	Stopping
2	Not Ready	6	Fault Stop
3	Ready	7	Faulted

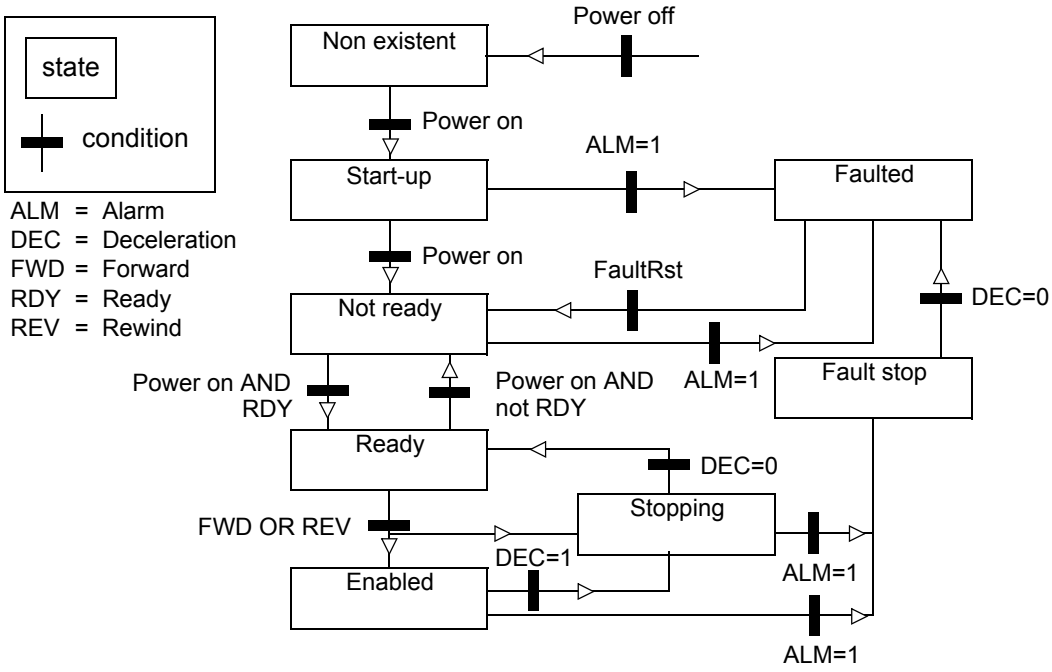

Figure 3. State transition diagram

Speed Actual (AC/DC Drive Object)

This attribute indicates the actual speed at which the drive is operating. The units are scaled by the SpeedScale attribute of the AC/DC Drive Object.

Torque Actual (AC/DC Drive Object)

This attribute indicates the actual torque at which the drive is operating. The units are scaled by the Torque Scale attribute of the AC/DC Drive Object.

ABB Drives communication profile

The control word and the status word

The Control Word is the principal means for controlling the drive from a fieldbus system. It is sent by the fieldbus master station to the drive through the adapter module. The drive switches between its states according to the bit-coded instructions on the Control Word, and returns status information to the master in the Status Word. For more information see the *Firmware manual* of the drive.

Communication

Overview

This chapter describes the DeviceNet communication protocol for the RDNA-01 and the configuration of the scanner. For detailed information on DeviceNet communication, refer to *ODVA DeviceNet Specifications Release 2.0*.

Introduction to DeviceNet

DeviceNet is a protocol based on CAN technology. CAN specifies the physical layer interface. DeviceNet specifies the wiring, and the data transfer through CAN.

The RDNA-01 is a device acting as a Group 2 Server realising the Predefined Master Slave Connection Set functionality. The Off-line Connection Set functionality and UCMM are not supported.

Object modelling and functional profiles

One of the main features of DeviceNet is object modelling. A group of objects can be described with a Functional Profile. The RDNA-01 realises the ODVA AC/DC Drive Functional Profile with additional features.

Assembly object

I/O Assembly Instances may also be referred to as Block Transfer of data. Intelligent devices realising a Functional Profile, such as the RDNA-01, have several objects. Since it is not possible to transmit more than one object data through a single connection, it is practical and more efficient to group attributes from different objects into a single I/O connection (for example a Polled Connection) using the Assembly object. The Assembly object acts as a tool for grouping these attributes.

The Assembly selections described above are in fact Instances of the Assembly object class. The RDNA-01 uses Static assemblies

(in other words, fixed groupings of different object data only), except for the User Specific Assembly and the Extended Speed Control plus Drive Parameters assembly. The static assemblies are predefined and cannot be changed.

The following tables describe the predefined assembly instances supported by the RDNA-01.

BASIC SPEED CONTROL assembly

The BASIC SPEED CONTROL assembly is defined by the ODVA AC/DC Drive Profile. The format of the output assembly is:

Instance 20								
Byte	**Bit 7**	**Bit 6**	**Bit 5**	**Bit 4**	**Bit 3**	**Bit 2**	**Bit 1**	**Bit 0**
0						Fault reset		Run fwd
1								
2	Speed Reference (Low Byte)							
3	Speed Reference (High Byte)							

The format of the input assembly is:

Instance 70								
Byte	**Bit 7**	**Bit 6**	**Bit 5**	**Bit 4**	**Bit 3**	**Bit 2**	**Bit 1**	**Bit 0**
0						Running 1		Faulted
1								
2	Speed Actual Value (Low Byte)							
3	Speed Actual Value (High Byte)							

The unit of speed reference and actual is rpm.

Note: If the BASIC SPEED CONTROL, EXTENDED SPEED CONTROL or the EXTENDED SPEED CONTROL PLUS DRIVE PARAMETERS assembly is used, it must be ensured that the fieldbus is selected as the drive control source and fieldbus specific (Generic Drive profile) Control/Status Word format is selected instead of ABB Drives profile.

EXTENDED SPEED CONTROL assembly

The EXTENDED SPEED CONTROL assembly is defined by the ODVA AC/DC Drive Profile. The format of the output assembly is:

Instance 21								
Byte	**Bit 7**	**Bit 6**	**Bit 5**	**Bit 4**	**Bit 3**	**Bit 2**	**Bit 1**	**Bit 0**
0		NetRef	NetCtrl			Fault Reset	Run Reverse	Run Forward
1								
2	Speed Reference (Low Byte)							
3	Speed Reference (High Byte)							

The format of the input assembly is:

Instance 71								
Byte	**Bit 7**	**Bit 6**	**Bit 5**	**Bit 4**	**Bit 3**	**Bit 2**	**Bit 1**	**Bit 0**
0	At Refer-ence	Ref From Net	Ctrl From Net	Ready	Running Reverse	Running Forward	Warn-ing	Faulted
1	Drive State (see section *State (Control Supervisor Object)* on page *50*)							
2	Speed Actual (Low Byte)							
3	Speed Actual (High Byte)							

Note: If the BASIC SPEED CONTROL, EXTENDED SPEED CONTROL or the EXTENDED SPEED CONTROL PLUS DRIVE PARAMETERS assembly is used, it must be ensured that the fieldbus is selected as the drive control source and fieldbus specific (Generic Drive profile) Control/Status Word format is selected instead of ABB Drives profile.

EXTENDED SPEED CONTROL PLUS DRIVE PARAMETERS assembly

The format of the output assembly is:

Instance 121								
Byte	**Bit 7**	**Bit 6**	**Bit 5**	**Bit 4**	**Bit 3**	**Bit 2**	**Bit 1**	**Bit 0**
0		NetRef	NetCtrl			Fault Reset	Run Reverse	Run Forward
1								
2	Speed Reference (Low Byte)							
3	Speed Reference (High Byte)							
4	Output I/O 1 (Low Byte)							
5	Output I/O 1 (High Byte)							
6	Output I/O 2 (Low Byte)							
7	Output I/O 2 (High Byte)							
8	Output I/O 3 (Low Byte)							
9	Output I/O 3 (High Byte)							
10	Output I/O 4 (Low Byte)							
11	Output I/O 4 (High Byte)							
12	Output I/O 5 (Low Byte)							
13	Output I/O 5 (High Byte)							
14	Output I/O 6 (Low Byte)							
15	Output I/O 6 (High Byte)							
16	Output I/O 7 (Low Byte)							
17	Output I/O 7 (High Byte)							
18	Output I/O 8 (Low Byte)							
19	Output I/O 8 (High Byte)							
20	Output I/O 9 (Low Byte)							
21	Output I/O 9 (High Byte)							

The value of Output I/O 1 to 9 sets the data word or drive parameter defined by Output I/O Par 1 to 9 respectively. See chapter *Drive configuration*.

The format of the input assembly is:

Instance 171								
Byte	**Bit 7**	**Bit 6**	**Bit 5**	**Bit 4**	**Bit 3**	**Bit 2**	**Bit 1**	**Bit 0**
0	At Refer-ence	Ref From Net	Ctrl From Net	Ready	Running Reverse	Running Forward	Warn-ing	Faulted
1	Drive State (see section *State (Control Supervisor Object)* on page *50*)							
2	Speed Actual (Low Byte)							
3	Speed Actual (High Byte)							
4	Input I/O 1 (Low Byte)							
5	Input I/O 1 (High Byte)							
6	Input I/O 2 (Low Byte)							
7	Input I/O 2 (High Byte)							
8	Input I/O 3 (Low Byte)							
9	Input I/O 3 (High Byte)							
10	Input I/O 4 (Low Byte)							
11	Input I/O 4 (High Byte)							
12	Input I/O 5 (Low Byte)							
13	Input I/O 5 (High Byte)							
14	Input I/O 6 (Low Byte)							
15	Input I/O 6 (High Byte)							
16	Input I/O 7 (Low Byte)							
17	Input I/O 7 (High Byte)							
18	Input I/O 8 (Low Byte)							
19	Input I/O 8 (High Byte)							
20	Input I/O 9 (Low Byte)							
21	Input I/O 9 (High Byte)							

The value of Input I/O 1 to 9 is read from the data word or drive parameter defined by Input I/O Par 1 to 9 respectively. See chapter *Drive configuration*.

Note: If the BASIC SPEED CONTROL, EXTENDED SPEED CONTROL or the EXTENDED SPEED CONTROL PLUS DRIVE PARAMETERS assembly is used, it must be ensured that the fieldbus is selected as the drive control source and fieldbus specific (Generic Drive profile) Control/Status Word format is selected instead of ABB Drives profile.

Note: With ACx550 the Ctrl From Net bit reflects the status of NetCtrl. With ACS800 it indicates if any of the control word bits can be used to control the drive. For example, if 16.04 FAULT RESET SEL is COMM, the bit is always fixed to 1.

ABB Drives assembly

ABB Drives assembly allows the use of the ABB Drives communication profile. The format of the output assembly is:

Instance 100								
Byte	**Bit 7**	**Bit 6**	**Bit 5**	**Bit 4**	**Bit 3**	**Bit 2**	**Bit 1**	**Bit 0**
0	Control Word (Low Byte)							
1	Control Word (High Byte)							
2	Set Speed (Low Byte), unscaled							
3	Set Speed (High Byte), unscaled							

The format of the input assembly is:

Instance 101								
Byte	**Bit 7**	**Bit 6**	**Bit 5**	**Bit 4**	**Bit 3**	**Bit 2**	**Bit 1**	**Bit 0**
0	Status Word (Low Byte)							
1	Status Word (High Byte)							
2	Actual Speed (Low Byte), unscaled							
3	Actual Speed (High Byte), unscaled							

User Specific assembly

User Specific assembly allows the use of the ABB Drives communication profile. The format of the output assembly is:

Instance 102								
Byte	**Bit 7**	**Bit 6**	**Bit 5**	**Bit 4**	**Bit 3**	**Bit 2**	**Bit 1**	**Bit 0**
0	Output I/O 1 (Low Byte)							
1	Output I/O 1 (High Byte)							
2	Output I/O 2 (Low Byte)							
3	Output I/O 2 (High Byte)							
4	Output I/O 3 (Low Byte)							
5	Output I/O 3 (High Byte)							
6	Output I/O 4 (Low Byte)							
7	Output I/O 4 (High Byte)							
8	Output I/O 5 (Low Byte)							
9	Output I/O 5 (High Byte)							
10	Output I/O 6 (Low Byte)							
11	Output I/O 6 (High Byte)							
12	Output I/O 7 (Low Byte)							
13	Output I/O 7 (High Byte)							
14	Output I/O 8 (Low Byte)							
15	Output I/O 8 (High Byte)							
16	Output I/O 9 (Low Byte)							
17	Output I/O 9 (High Byte)							

The value of Output I/O 1 to 9 sets the data word or drive parameter defined by Output I/O Par 1 to 9 respectively. See chapter *Drive configuration*.

The format of the input assembly is:

Instance 103								
Byte	**Bit 7**	**Bit 6**	**Bit 5**	**Bit 4**	**Bit 3**	**Bit 2**	**Bit 1**	**Bit 0**
0	Input I/O 1 (Low Byte)							
1	Input I/O 1 (High Byte)							
2	Input I/O 2 (Low Byte)							
3	Input I/O 2 (High Byte)							
4	Input I/O 3 (Low Byte)							
5	Input I/O 3 (High Byte)							
6	Input I/O 4 (Low Byte)							
7	Input I/O 4 (High Byte)							
8	Input I/O 5 (Low Byte)							
9	Input I/O 5 (High Byte)							
10	Input I/O 6 (Low Byte)							
11	Input I/O 6 (High Byte)							
12	Input I/O 7 (Low Byte)							
13	Input I/O 7 (High Byte)							
14	Input I/O 8 (Low Byte)							
15	Input I/O 8 (High Byte)							
16	Input I/O 9 (Low Byte)							
17	Input I/O 9 (High Byte)							

The value of Input I/O 1 to 9 is read from the data word or drive parameter defined by Input I/O Par 1 to 9 respectively. See chapter *Drive configuration*.

Drive parameter handling

With the RDNA-01, drive parameters can also be accessed. The function is implemented by employing the so-called Explicit Messaging properties of the DeviceNet protocol. Explicit Messaging makes use of objects consisting of three parts, *Class, Instance,* and *Attribute.*

Class is always 144 (90h). *Instance* and *Attribute* correspond to the drive parameter Group and Index in the following way:

- *Instance* = Parameter Group (01…99)
- *Attribute* = Parameter Index (01…99)

For example, Parameter 99.01 is accessed as follows:

- *Class* = 144 = 0x90
- *Instance* = 99 = 0x63
- *Attribute* = 1 = 0x01.

In addition, the instance 100 (0x64) can be used to access the data sets using explicit messaging. The first word of data set 2, for example, can be accessed with class 0x90, instance 0x64 attribute 4. Refer to the drive firmware manual for more information.

Class objects

Legend:	**Data type**
UINT8	Unsigned Integer 8 bit
UINT16	Unsigned Integer 16 bit
SINT16	Signed Integer 16 bit
UINT32	Unsigned Integer 32 bit
BOOL	Boolean value

Identity Object, Class 0x01

This object provides identification of and general information about the device.

Class Attributes

#	Attribute name	Services	Description	Default, Minimum, Maximum	Data type
1	Revision	Get	Revision of the Identity Object	1,1,1	Array of UINT8

Instance Attributes

#	Attribute name	Services	Description	Default, Minimum, Maximum	Data type
1	Vendor ID	Get	Identification of the device vendor.	46	UINT16
2	Device Type	Get	Identification of the general product type	2	UINT16
3	Product Code	Get	Assigned vendor code to describe the device	N/A,N/A, N/A	UINT16
4	Revision	Get	Revision of the item the Identity Object represents		Array[UINT 8 UINT8]
5	Status	Get	Summary Status of the Device	0,0,255	UINT16
6	Serial Number	Get	Serial Number of the DeviceNet module	N/A,N/A, N/A	UINT32
7	Product Name	Get	Product identification. Max. 32 characters.	RDNA-01 and ACS xxx	Short String

Attribute explanations

Vendor ID
Vendor IDs are managed by the Open DeviceNet Vendor Association, Inc. (ODVA). The ABB Vendor ID is 46.

Device Type
The list of device types is managed by ODVA. It is used to identify the device profile that a particular product is using.
E.g. 2 = AC drive, 13 = DC drive

Product Code
Every ABB drive type or application of the drive has a dedicated product code.

Revision
Revision attribute, which consists of Major and Minor Revisions, identifies the Revision of the item the Identity Object is representing.

Status
This attribute represents the current status of the entire device. Its value changes as the state of the device changes. The Status attribute is a WORD, with the following bit definitions:

Bit(s)	Type/Name	Definition
0	Owned	TRUE indicates the device (or an object within the device) has an owner. Within the Master/Slave paradigm the setting of this bit means that the Predefined Master/Slave Connection Set has been allocated to a master. Outside the Master/Slave paradigm the meaning of this bit is to be defined.
1		Reserved, set to 0.
2	Configured	TRUE indicates the application of the device has been configured to do something that differs from the “out–of–box” default. This does not include configuration of the communications.
3		Reserved, set to 0.
4,5,6,7		Vendor–specific
8	Minor Recoverable Fault	TRUE indicates the device detected a recoverable problem. The problem does not cause the device to go into a faulted state.
9	Minor Unrecoverable Fault	TRUE indicates the device detected a unrecoverable problem. The problem does not cause the device to go into a faulted state.
10	Major Recoverable Fault	TRUE indicates the device detected a problem which caused the device to go into the “Major Recoverable Fault” state.

Bit(s)	Type/Name	Definition
11	Major Unrecoverable Fault	TRUE indicates the device detected a problem which caused the device to go into the “Major Unrecoverable Fault” state.
12,13,14, 15		Reserved, set to 0.

Serial Number:
This attribute is a number used in conjunction with the Vendor ID to form a unique identifier for each device on DeviceNet.

Product Name:
This text string should represent a short description of the product/product family represented by the product code in attribute 3.

DeviceNet Object, Class 0x03

The DeviceNet Object provides the configuration and status of a DeviceNet port. Each DeviceNet product must support one (and only one) DeviceNet object per physical connection to the DeviceNet communication link.

Class Attributes

#	Attribute name	Services	Description	Data type
1	Revision	Get_Attribute_Single	Revision of the DeviceNet Object Class Definition upon which the implementation is based	Array of UINT8

Instance Attributes

#	Attribute name	Services	Description	Default, Minimum, Maximum	Data type
1	MAC ID	Get_Attribute_Single	Node address	-,0,63	UINT8
2	Baud Rate	Get_Attribute_Single	The baud rate of the device	-,0,2	UINT8
5	Allocation information	Get_Attribute_Single	Allocation Choice Master's Mac ID	N/A,N/A, N/A	Struct UINT8 UINT8
6	MAC ID switch changed	Get_Attribute_Single	1 = MAC ID switching changed since start-up	N/A,N/A, N/A	UINT8
7	Baudrate changed	Get_Attribute_Single	1 = Baudrate changed since start-up	N/A,N/A, N/A	UINT8
8	Actual MAC switch position	Get_Attribute_Single	The MAC switch position	N/A,N/A, N/A	UINT8
9	Actual Baudrate switch position	Get_Attribute_Single	The Baudrate switch position	N/A,N/A, N/A	UINT8

The Allocation Information attribute consists of the following:

Allocation Choice Byte
The Allocation Choice byte indicates which of the Predefined Master/Slave Connections are active (in the Configuring, or Established state).

The Allocation Choice byte is initialized to 00 at device power–up or reset.

Master's MAC ID
The range of values is 0 to 63 and 255 decimal. A value in the range of 0 … 63 indicates that the Predefined Master/Slave Connection Set is currently allocated, and denotes the MAC ID of the device that performed the allocation. The value 255 means the Predefined Master/Slave Connection set has not been allocated.

The Master’s MAC ID attribute is initialized to 255 (FF hex) at device power–up/reset.

Configuration Object, Class 0x91

Class Attributes

#	Attribute name	Services	Description	Data type
1	Revision	Get	Revision of the DeviceNet Object Class Definition upon which the implementation is based	Array of UINT8

Instance Attributes

#	Attribute name	Services	Description	Default, Minimum, Maximum	Data type
1	Vendor_MacID	Get, Set	The MacID set by software	63,0,63	UINT8
2	Vendor_Baudrate	Get, Set	The Baudrate set by software. 0 = 125kbit/s 1 = 250 kbit/s 2 = 500 kbit/s	0,0,2	UINT8
3	SW_HW	Get, Set	Software or hardware setting of the MacID and Baudrate 0 = Hardware settings 1 = Software settings	-,0,1	UINT8
4	Stop_Function	Get, Set	The mode of the stopping of the drive 0 = Ramp stop 1 = Coast stop	-,0,1	UINT8
5	Output_Assy_Inst	Get, Set	Output assembly instance	-	UINT8
6	Input_Assy_Inst	Get, Set	Input assembly instance	-	UINT8
7	Idle mode	Get, Set	Action taken when the master goes to idle state when using the ABB communication profile. 0 = fault 1 = freeze data (keep running)	-	UINT8

DeviceNet Connection Object, Class 0x05

The Connection Class allocates and manages the internal resources associated with both I/O and Explicit Messaging Connections. The specific instance generated by the Connection Class is referred to as Connection Instance or Connection Object.

Instance numbering

1	Explicit messaging connection
2	Polled connection or cos/cyclic consuming connection
4	Cos/cyclic producing connection
10…14	Explicit server instances

Class Attributes

#	Attribute name	Services	Description	Data type
1	Revision	Get	Revision of the DeviceNet Object	Array of UINT8

Explicit Connection Instance (Instances 1, 10-14)

#	Attribute name	Services	Description	Default, Minimum, Maximum	Data type
1	State	Get	State of the object	1,0,5	UINT8
2	Instance Type	Get	Indicates either I/O or messaging connection.	0,0,0	UINT8
3	Transport Class Trigger	Get	Defines the behaviour of the connection.	0x83, 0x83, 0x83	UINT8
4	Produced Cnxn Id	Get	Placed in CAN Identifier Field when the Connection Transmits	N/A,N/A, N/A	UINT16
5	Consumed Cnxn Id	Get	CAN Identifier Field value that denotes message to be received	N/A,N/A, N/A	UINT16

#	Attribute name	Services	Description	Default, Minimum, Maximum	Data type
6	Comm Characteristics	Get	Defines the Message Group(s) across which productions and consumptions are associated in this Connection.	N/A,N/A, N/A	UINT8
7	Produced Connection Size	Get	Maximum number of bytes transmitted across this Connection	512,512, 512	UINT16
8	Consumed Connection size	Get	Maximum number of bytes received across this Connection	512,512, 512	UINT16
9	Expected Packet Rate	Get,Set	Defines timing associated with this Connection.	N/A,N/A, N/A	UINT16
12	Watchdog Timeout Action	Get,Set	Defines how to handle Inactivity/Watchdog timeouts.	N/A,N/A, N/A	UINT8
13	Produced Connection Path Length	Get	Number of bytes in the produced_connection_path length attribute	256,256, 256	UINT16
14	Produced Connection Path	Get	Application Object producing data on this Connection	NULL, NULL, NULL	Array of UINT8
15	Consumed Connection Path Length	Get	Number of bytes in the consumed_connection_path length attribute	256,256, 256	UINT16
16	Consumed Connection Path	Get	Specifies the Application Object(s) that are to receive the data consumed by this Connection Object.	NULL, NULL, NULL	Array of UINT8
17	Production Inhibit Time	Get	Defines minimum time between new data production.	0,0,0	UINT16

Polled I/O Connection Instance (Instance 2)

#	Attribute name	Services	Description	Default, Minimum, Maximum	Data type
1	State	Get	State of the object	1,0,4	UINT8
2	Instance Type	Get	Indicates either IO or messaging connection.	0,0,1	UINT8
3	Transport Class Trigger	Get	Defines the behaviour of the connection.	0x83, 0x83, 0x83	UINT8
4	Produced Cnxn Id	Get	Placed in CAN Identifier Field when the Connection Transmits	N/A,N/A, N/A	UINT16
5	Consumed Cnxn Id	Get	CAN Identifier Field value that denotes message to be received	N/A,N/A, N/A	UINT16
6	Comm Characteristics	Get	Defines the Message Group(s) across which productions and consumptions are associated in this Connection.	N/A,N/A, N/A	UINT8
7	Produced Connection Size	Get	Maximum number of bytes transmitted across this Connection	I/O in length, 0, I/O in length	UINT16
8	Consumed Connection size	Get	Maximum number of bytes received across this Connection	I/O out length, 0, I/O out length	UINT16
9	Expected Packet Rate	Get,Set	Defines timing associated with this Connection.	N/A,N/A, N/A	UINT16
12	Watchdog Timeout Action	Get	Defines how to handle Inactivity/Watchdog timeouts.	N/A,N/A, N/A	UINT8
13	Produced Connection Path Length	Get	Number of bytes in the produced_connection_path length attribute	3,3,3	UINT16

#	Attribute name	Services	Description	Default, Minimum, Maximum	Data type
14	Produced Connection Path	Get	Application Object producing data on this Connection	0x62 0x39 0x37, N/A,N/A	Array of UINT8
15	Consumed Connection Path Length	Get	Number of bytes in the consumed_connection_path length attribute	3,3,3	UINT16
16	Consumed Connection Path	Get	Specifies the Application Object(s) that are to receive the data consumed by this Connection Object.	0x62 0x31 0x35, N/A,N/A	Array of UINT8
17	Production Inhibit Time	Get	Defines minimum time between new data production.	0,3FFF, N/A	UINT16

Change of state/Cyclic (Acknowledged) (Instance 4)

#	Attribute name	Services	Description	Default, Minimum, Maximum	Data type
1	State	Get	State of the object	1, N/A,N/A	UINT8
2	Instance Type	Get	Indicates either IO or messaging connection.	1,0,1	UINT8
3	Transport Class Trigger	Get	Defines behaviour of the connection.	N/A,N/A, N/A	UINT8
4	Produced Cnxn Id	Get	Placed in CAN Identifier Field when the Connection Transmits	N/A,N/A, N/A	UINT16
5	Consumed Cnxn Id	Get	CAN Identifier Field value that denotes message to be received	N/A,N/A, N/A	UINT16
6	Comm Characteristics	Get	Defines the Message Group(s) across which productions and consumptions are associated in this Connection.	N/A,N/A, N/A	UINT8

#	Attribute name	Services	Description	Default, Minimum, Maximum	Data type
7	Produced Connection Size	Get	Maximum number of bytes transmitted across this Connection	0,0,N/A	UINT16
8	Consumed Connection size	Get	Maximum number of bytes received across this Connection	0,0,N/A	UINT16
9	Expected Packet Rate	Get,Set	Defines timing associated with this Connection.	0,0,0xffff	UINT16
12	Watchdog Timeout Action	Get	Defines how to handle Inactivity/Watchdog timeouts.	N/A,N/A, N/A	UINT8
13	Produced Connection Path Length	Get	Number of bytes in the produced_connection_path length attribute	3,0,3	UINT16
14	Produced Connection Path	Get	Application Object producing data on this Connection	0x62 0x39 0x37, 0,N/A	Array of UINT8
15	Consumed Connection Path Length	Get	Number of bytes in the consumed_connection_path length attribute	5,0,5	UINT16
16	Consumed Connection Path	Get	Specifies the Application Object(s) that are to receive the data consumed by this Connection Object.	0x62 0x31 0x35, N/A,N/A	Array of UINT8
17	Production Inhibit Time	Get,Set	Defines minimum time between new data production.	0,3FFF, N/A	UINT16

Acknowledge Handler Object, Class 0x2B

The Acknowledge Handler Object is used to manage the reception of message acknowledgements. This object communicates with a message producing Application Object within the device. The Acknowledge Handler Object notifies the producing application of acknowledge reception, acknowledge timeouts and production retry limit.

Class Attributes

#	Attribute name	Services	Description	Data type
1	Revision	Get	Revision of the DeviceNet Object Class Definition upon which the implementation is based	Array of UINT8

Instance Attributes

#	Attribute name	Services	Description	Default, Minimum, Maximum	Data type
1	Acknowledge Timer	Get, Set	Time in milliseconds to wait for acknowledge before resending	16,1, 65535	UINT16
2	Retry Limit	Get, Set	Number of Acknowledge Timeouts to wait before informing the producing application of a Retry-Limit_Reached event	1,0,255	UINT8
3	COS Producing Connection Instance	Get	Connection Instance Id which contains the path of the producing I/O application object which will be notified of Acknowledge Handler events	N/A	UINT16

Motor Data Object, Class 0x28

This object serves as a database for motor parameters. Different motor types require different data to describe the motor. For example, AC induction motors do not need field current data like a DC motor to describe the motor.

Motor class	Motor types in class
AC motors	3 - PM synchronous 6 - Wound rotor induction 7 - Squirrel cage induction motor
DC motors	1 - PM DC motor 2 - FC DC motor

Class Attributes

#	Attribute name	Services	Description	Data type
1	Revision	Get	Revision of the DeviceNet Object Class Definition upon which the implementation is based	Array of UINT8

Instance Attributes

#	Attribute name	Services	Description	Motor type	Data type
6	Rated Current	Get, Set	Rated Stator Current from motor name plate	AC/DC	UINT16
7	Rated Voltage	Get, Set	Rated Base Voltage from motor name plate	AC/DC	UINT16
8	Rated Power	Get, Set	Rated Power at Rated Frequency	AC/DC	UINT32
9	Rated Frequency	Get, Set	Rated Electrical Frequency	AC	UINT16
12	Pole Count	Get	Number of poles in the motor	AC	UINT16
15	Base Speed	Get, Set	Nominal speed at rated frequency from nameplate	AC/DC	UINT16

Note: Attribute 8 Rated Power can not be used if the rated power is over 3 MW.

Control Supervisor Object, Class 0x29

The object models all the management functions for devices within the ‘Hierarchy of Motor Control Devices’. The behaviour of motor control devices is described by the *State transition diagram* and the *Run/Stop event matrix*. See *Table 2.* and *Figure 3.*

Class Attributes

#	Attribute name	Services	Description	Data type
1	Revision	Get	Revision of the DeviceNet Object Class Definition upon which the implementation is based	Array of UINT8

Instance Attributes

#	Attribute name	Services	Description	Data type
3	Run 1 [1)]	Get, Set	0 = Stop, 1 = Run	BOOL
4	Run 2 [2)]	Get, Set	0 = Stop, 1 = Run	BOOL
5	Net Control [2)]	Get, Set	0 = Local Control, 1 = Network Control	BOOL
6	State	Get	1 = Start/up, 2 = Not_ready, 3 = Ready, 4 = Enabled, 5 = Stopping, 6 = FaultStop, 7 = Faulted	UINT8
7	Running 1 [3)]	Get	0 = Stopped, 1 = Running	BOOL
8	Running 2 [4)]	Get	0 = Stopped, 1 = Running	BOOL
9	Ready	Get	1 = Ready, Enabled or Stopping; 0 = Other state	BOOL
10	Faulted	Get	0 = Not faulted, 1 = Fault occurred	BOOL
11	Warning	Get	0 = No Warnings present, 1 = Warning	BOOL
12	FaultRst	Get, Set	0 → 1 Fault Reset	BOOL
13	Fault Code	Get	The fault that caused the last transition to the Faulted state.	UINT16
14	Warning Code	Get	Code word indicating warning present. If multiple warnings are present, the lowest code value is displayed.	UINT16
15	CtlFromNet	Get	0 = NetControl disabled 1 = NetControl enabled	BOOL
17	Force Fault	Get, Set	0 → 1 Force a fault	BOOL
18	Force Status	Get	0 = Not Forced Non-zero = Forced	BOOL
20	Net Idle	Get, Set	Action taken when the master goes to idle state in Generic drive profile 0 = Stop 1 = Freeze (keep running) 2 = Fault	

[1)] Supported only with assembly instances 20, 21 and 121
[2)] Supported only with assembly instance 21 and 121
[3)] Supported only with assembly instances 70, 71 and 171
[4)] Supported only with assembly instance 71 and 171

AC/DC-Drive Object, Class 0x2A

This object models the functions specific to an AC or DC Drive.

Class Attributes

#	Attribute name	Services	Description	Data type
1	Revision	Get	Revision of the DeviceNet Object Class Definition upon which the implementation is based	Array of UINT8

Instance Attributes

#	Attribute name	Services	Description	Data type
3	At Reference	Get	Frequency arrival	BOOL
4	NetRef [2)]	Get, Set	Requests torque or speed reference to be local or from the network. 0 = Set Reference to local control 1 = Set Reference at DN Control Note that the actual status of torque or speed reference is reflected in attribute 29, RefFromNet.	BOOL
7	Speed Actual	Get	Units RPM/$2^{SpeedScale}$	SINT16
8	SpeedRef	Get, Set	Units RPM/$2^{SpeedScale}$	SINT16
18	AccelTime	Get, Set	Units msec/$2^{TimeScale}$	UINT16
19	DecelTime	Get, Set	Units msec/$2^{TimeScale}$	UINT16
22	Speed Scale	Get, Set	Speed scaling factor	UINT8
23	Current Scale	Get, Set	Current scaling factor	UINT8
24	Torque Scale	Get, Set	Torque scaling factor	UINT8
26	Power Scale	Get, Set	Power scaling factor	UINT8
27	Voltage Scale	Get, Set	Voltage scaling factor	UINT8
28	Time Scale	Get, Set	Time scaling factor	UINT8
29	Ref From Net	Get	Reflecting attribute 4	BOOL
31	Field I or V	Get, Set	Always to be set to 0	-

[2)] Supported only with assembly instances 21 and 121

Diagnostics

RDNA-01 status codes

The status of the DeviceNet module is indicated by a ‘fieldbus status’ parameter in the drive application program (refer to the drive documentation).

IDLE
The drive could not initiate communication with the DeviceNet Module.

EXECUT. INIT
The module is initialising and performing self-test.

TIME-OUT
The DeviceNet Module has stopped communicating with the drive.

CONFIG ERROR
The DeviceNet Module has not accepted the configuration file downloaded from the drive. Check compatibility of module and drive file version number.

OFF-LINE
The module has completed its power-up sequence, and is waiting for a DeviceNet Scanner or the Manager software to establish a connection.

ON-LINE
The DeviceNet module is connected and communicating with a DeviceNet Scanner or Manager software.

RESET
The drive has initiated a reset command to the module.

LED indications

The RDNA-01 module is equipped with three diagnostic LEDs. The description of the LEDs is below.

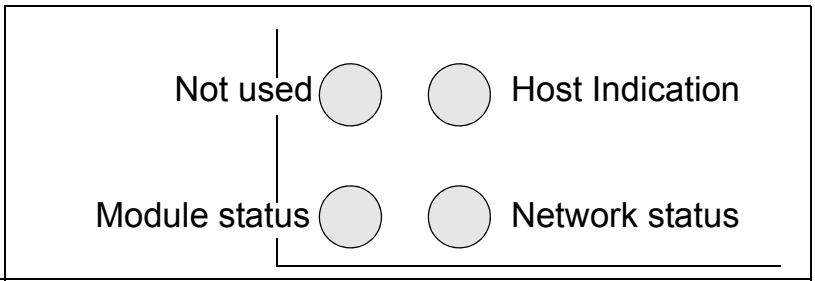

Name	Colour	Function
Module status	Green	**Steady** - Device operational
	Red	**Steady** - Unrecoverable fault **Flashing** - Minor fault
	Off	No power
Network status	Green	**Steady** - Module is on-line **Flashing** - Module is not on-line
	Red	**Steady** - Critical link failure **Flashing** - Connection timeout
	Off	Network cable disconnected or master down
Host indication	Green	**Lit** - Link functional
	Red	**Lit** - Link lost permanently **Flashing** - Link lost temporarily

Installation problems

Verify all the connections on the module:

- Check that the DeviceNet cables are connected to terminal block X1 as described in chapter *Electrical installation*.
- Check that an external voltage of 24 V DC is applied to terminals X1:1 and X1:5.
- Check that the RDNA-01 module is properly inserted into the option slot.
- Check the fastening of the RDNA-01 module with the 2 screws.

Drive setup

The fieldbus parameter group is not shown on the panel:

- Enable the RDNA-01 by setting the appropriate drive parameter.

The RDNA-01 is using default values:

- Verify that the fieldbus parameter group is set up correctly. If so, turn off and on the power to the drive or issue a ‘Fieldbus Adapter parameter refresh’ command. This will make the module re-read its setup parameters.

Drive actual values can be read, but the control commands (start/stop or reference) do not go through:

- Check that the control location parameters of the drive are set to use the RDNA-01 as the source of the required command.
- Check that the drive is in REMOTE control.

PLC programming

The PLC program is beyond ABB Drives support. Contact the manufacturer for assistance.

Scanner fault indications

Refer to scanner documentation.

Definitions and abbreviations

Change of State/Cyclic Message

The Change of State/Cyclic Message is transmitted by either the Master or the Slave. A Change of State/Cyclic Message is directed towards a single specific node (point-to-point). An Acknowledge Message may be returned in response to this message.

Communication Module

Communication Module is a name for a device (e.g. a fieldbus adapter) through which the drive is connected to an external serial communication network (e.g. a fieldbus). The communication with the communication module is activated by a drive parameter.

EDS File

The Electronic Data Sheet (EDS) file identifies the properties of the device to the DeviceNet Scanner. Each type of drive and application program requires its own EDS file.

Input

In the ODVA DeviceNet specification the word ‘input’ is used to describe data flow from a device (such as the RDNA-01) to the network.

I/O Assembly selection

Smart networked devices (like the RDNA-01) can produce and/or consume more than one I/O value. Typically, they will produce and/or consume one or more I/O value, as well as status and diagnostic information. Each piece of data communicated by a device is represented by an attribute of one of the device’s internal objects.

Communicating multiple pieces of data (attributes) across a single I/O connection requires that the attributes be grouped or assembled together into a single block.

MAC ID

Every node on DeviceNet network has to have a unique identifier. This node number is called MAC ID (Media Access Control ID).

ODVA

ODVA stands for Open DeviceNet Vendor Association. ODVA is an independent organization that promotes interoperativity between different manufacturers DeviceNet products. ABB is an Associate Member at the ODVA.

Output

In the ODVA DeviceNet specification the word ‘output’ is used to describe data flow from the network into a device (such as the RDNA-01).

Parameter

A parameter is an operating instruction for the drive. Parameters can be read and programmed using the drive control panel, or through the RDNA-01 module.

Poll Message

Most DeviceNet Scanners as well as the RDNA-01 support two different data services. These are Poll and Change of State/Cyclic messages.

The Poll Command is an I/O Message that is transmitted by the Master. A Poll Command is directed towards a single, specific Slave (point-to-point, RDNA-01 always acts as a Slave). A Master must transmit a separate Poll Command Message for each of its Slaves that is to be polled. The Poll Response is an I/O Message that a Slave transmits back to the Master when the Poll Command is received.

RDNA-01 DeviceNet Adapter module

The RDNA-01 Adapter module is one of the optional fieldbus adapter modules available for ABB drives. The RDNA-01 is a device through which an ABB drive is connected to a DeviceNet serial communication bus.

Scanlist

The DeviceNet Scanner communicates with the DeviceNet Slaves in a user-defined order. This order of communication is the scanlist. The scanlist contains a complete list of the Slave nodes and the order in which the Slaves are accessed.

Technical data

RDNA-01

Enclosure:

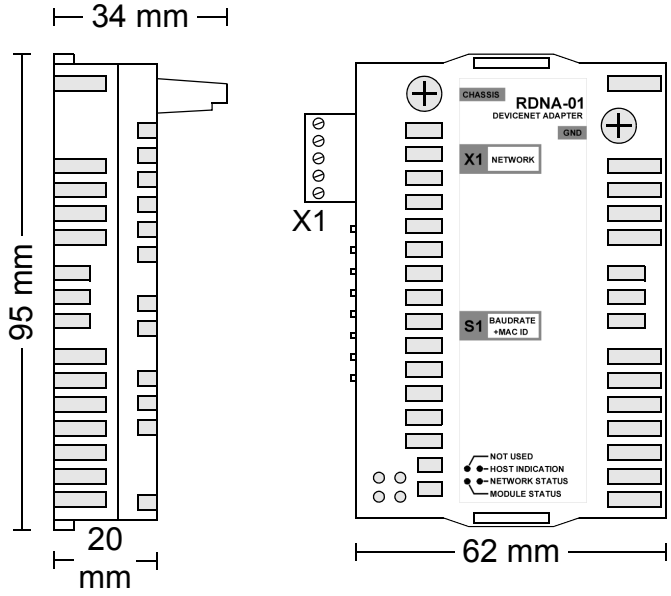

Mounting: Into an option slot inside the drive

Degree of protection: IP 20

Ambient conditions: The applicable ambient conditions specified for the drive in its *Hardware Manual* are in effect.

Settings:

- Through drive parameters
- Eight DIP switches for selecting node address and baud rate

Connectors:

- 34-pin parallel bus connector
- 5-pole screw type connector for bus connection (max. 2.5 mm^2 cross section), removable

Current consumption:

- 250 mA max. (5 V), supplied by the RMIO board
- 15 mA max. (24 V) from the network supply.

General:

- Estimated min. lifetime: 100 000 h
- All materials are UL/CSA approved
- Complies with EMC Standards EN 50081-2 and EN 50082-2

Fieldbus link

Compatible Devices: Any ODVA-compliant DeviceNet scanner supporting Poll - Response commands to Group 2 only Slaves

Medium:

- **Termination:** 121 ohm, 1%, Metal Film, 1/4 W
- **DeviceNet Cables:**
  YR-29790 (Thick DeviceNet Cable)
  YR-29832 (Thin DeviceNet Cable)
- **Maximum Bus Length:** 1200 m

Topology: Multi-drop

Serial Communication Type: Asynchronous, half Duplex

Transfer Rate: 125, 250 or 500 kbit/s

Protocol: DeviceNet

3AFE64504223 Rev D / EN
EFFECTIVE: 16.07.2007

ABB Oy
AC Drives
P.O. Box 184
FI-00381 HELSINKI
FINLAND
Telephone +358 10 22 11
Fax +358 10 22 22681
Internet www.abb.com

ABB Inc.
Automation Technologies
Drives & Motors
16250 West Glendale Drive
New Berlin, WI 53151
USA
Telephone 262 785-3200
800-HELP-365
Fax 262 780-5135

ABB Beijing Drive Systems Co. Ltd.
No. 1, Block D, A-10 Jiuxianqiao Beilu
Chaoyang District
Beijing, P.R. China, 100015
Telephone +86 10 5821 7788
Fax +86 10 5821 7618
Internet www.abb.com